MAHARASHTRA COMPENSATORY AFFORESTATION FUND MANAGEMENT AND PLANNING AUTHORITY (Maha CAMPA)
Vanbhavan, Ramgiri Road, Civil Line, Nagpur-440001
Campams2010@gmail.com / apccfcampa@mahaforest.gov.in
Website – www.mahaforest.gov.in/campa
Ph.No.0712-2556920,

No. Desk-CAMPA/C.R.18(21-22)/**52**
Nagpur, **Dt. 4th May, 2022**

To,
The Chief Executive Officer,
National Authority CAMPA
Indira Paryavaran Bhavan,
Jorbagh Road,
New Delhi- 110003

Subject: Submission of Annual Plan of Operations 2022-23 of Maharashtra CAMPA.

The Annual Plan of Operations in respect of the State Authority of Maharashtra CAMPA for the year 2022-23 is hereby submitted for approval of the Executive Committee of the National Authority. The enclosed APO of 2022-23 (Annexure-A) is duly approved by the Steering Committee of the State Authority in its meeting held on 14/03/2022.

2. The Rate Structure of all Plantations Activities and Construction Works is enclosed as Annexure-B.

3. Third Party Evaluation of Plantations was also conducted and the Evaluation Report is also enclosed along with the APO 2022-23.

4. As per the directives from National Authority E-Green Watch cell has been created in CEO (Maha CAMPA) Office and the latest status of uploading of CAMPA works on e-Green Watch Portal is attached as Annexure-C.

5. It is therefore requested to move the same for the approval of the Executive Committee of the National Authority.

Thanking You.

Encl.: As above.

(Shailesh Tembhurnikar)
Principal Chief Conservator of Forest and
Chief Executive Officer (Maha CAMPA)

Copy submitted to Chairman Executive Committee, National Authority, CAMPA and Director General of Forests & Special Secretary, MoEF & CC, Government of India, New Delhi for information please.
Copy to Dy. Director General, Integrated Regional Office (IRO) (Central), MoEF & CC, Nagpur with enclosure in continuation to the letter no. CAMPA-10/RON/2020-NGP, Dt. 08.04.2022 for specific comments.

Annual Plan of Operations

2022-23

MAHARASHTRA
COMPENSATORY AFFORESTATION
FUND MANAGEMENT AND PLANNING AUTHORITY
(Maha CAMPA)

O/o the Principal Chief Conservator of Forest and Chief Executive Officer
(Maha CAMPA),
Vanbhavan, Ramgiri Road, Civil Lines, Nagpur-440001

MAHARASHTRA COMPENSATORY AFFORESTATION FUND MANAGEMENT AND PLANNING AUTHORITY (Maha CAMPA)

Annual Plan of Operations 2022-23

INDEX

Sr. No.	Particulars	Page No
1.	Minutes of Steering Committee, State Authority CAMPA, Dt. 14th March 2022.	i – xviii
2.	Part – I	1 – 18
3.	Part – II	19 – 20
4.	Part – III	21 – 24
5.	Part – IV	25 – 32
6.	Annexure – I – A & B	33 – 40
7.	Annexure – II	41 – 44
8.	Abstract of provision under APO 2022-23	45 – 46
9.	Abstract of Implementing Agency wise provision under Site Specific works	47 – 48
10.	Annexure – III – A (CA – PPO Works)	49 – 54
11.	Annexure – III – B (CA – FYO Works)	55 – 58
12.	Annexure – III – C (CA – SYO to 10th YO Works)	59 – 130
13.	Annexure – IV (CAT Plan)	131 – 172
14.	Annexure – V (Integrated Wildlife Management Plan)	173 – 174
15.	Annexure – VI – A (Conditional Works-Plantation)	175 – 188
16.	Annexure – VI – B (Conditional Works-Other)	189 – 202
17.	Abstract of Implementing Agency wise provision under NPV and Interest	203 – 204
18.	Annexure – VII – A (Item-wise & Division-wise Abstract of NPV)	205 – 300
19.	Annexure – VII – B (Details of NPV)	301– 656
20.	Annexure – VIII (Interest Component)	657 – 658

Minutes of Steering Committee,
State Authority CAMPA,
Dt. 14th March 2022.

Government of Maharashtra

No. FLD-2022/C.R.30/F-10
Revenue and Forest Department
Hutatma Rajguru Chowk,
Madam Cama Road,
Mantralaya, Mumbai – 400 032
Date: 13.04.2022

To,

1. Additional Chief Secretary / Principal Secretary / Secretary- Finance, Planning, Revenue, Environment, Tribal Development, Rural Development and Panchayat Raj, Agriculture, Information and Technology, Mantralaya, Mumbai.
2. Principal Chief Conservator of Forests (HoFF), Maharashtra State, Nagpur.
3. Principal Chief Conservator of Forests (Wildlife) and Chief Wildlife Warden, Maharashtra State, Nagpur.
4. Principal Chief Conservator of Forests & Chief Executive Officer, Maha-CAMPA and Member Secretary of Steering Committee, Maha-CAMPA, Nagpur.
5. Regional Officer (Central), Ministry of Environment, Forests & Climate Change, Government of India, Regional Office, Nagpur.
6. Additional Principal Chief Conservator of Forests & Nodal Officer, Maharashtra State, Nagpur.

Sub: Minutes of the Steering Committee, Maharashtra Compensatory Afforestation Funds Management and Planning Authority Meeting held on 14th March, 2022.

Sir,

Meeting of the Steering Committee, Maharashtra Compensatory Afforestation Funds Management and Planning Authority under the chairmanship of Hon'ble Chief Secretary was held on 14.03.2022. The Minutes of the meeting attached herewith for further necessary action.

(Ravikiran Govekar)
Chief Conservator of Forests (Mantralaya)

Copy to:

Joint Secretary to the Hon'ble Chief Secretary of Maharashtra.

(Dr. Ravikiran Govekar)
Chief Conservator of Forests (Mantralaya)
Revenue and Forest Department
Mantralaya, Mumbai

Minutes of the Meeting of the Steering Committee of the State Authority of CAMPA held on 14th March, 2022

The meeting of the Steering Committee of the State Authority of CAMPA was held on 14th March, 2022 at 12.00 p.m. under the chairmanship of the Chief Secretary, Maharashtra State. The list of the participants who attended the meeting is as under:

1) Shri. Manu Kumar Srivastava, Chief Secretary, Maharashtra State
2) Shri. B. Venugopal Reddy, Principal Secretary (Forests), Revenue & Forests Department, Mantralaya, Mumbai
3) Shri. Aseem Gupta, Principal Secretary, Information Technology Department, Mantralaya, Mumbai
4) Shri. Vivek R. Dahiphale, Joint Secretary representative of the Additional Chief Secretary, Finance Department, Mantralaya, Mumbai
5) Shri. S.S. Kamble, Dy. Secretary, representative of the Principal Secretary, Environment Department, Mantralaya, Mumbai
6) Shri. Balasaheb Raskar, Dy. Secretary, representative of the Principal Secretary, Agriculture Department, Mantralaya, Mumbai
7) Shri. Satish Kove, Desk Officer, representative of the Principal Secretary, Tribal Development Department, Mantralaya, Mumbai
8) Mrs. Neela Ranade, Under Secretary, representative of the Additional Chief Secretary, Rural Development Department, Mantralaya, Mumbai
9) Dr. Y.L.P. Rao, Principal Chief Conservator of Forests (HoFF), Maharashtra State
10) Shri. Pradeep Kumar, Principal Chief Conservator of Forests (BPD), Maharashtra State, Nagpur.
11) Shri. Sunil Limaye, Principal Chief Conservator of Forests (WL), Maharashtra State, Nagpur.
12) Shri. V. N. Ambade, Dy. Director General Forests, (Central), MoEF & CC, GOI, Regional Office, Nagpur
13) Shri. Naresh Zurmure, Additional Principal Chief Conservator of Forests and Nodal Officer, Maharashtra State, Nagpur.
14) Shri. Shailesh Tembhurnikar, PCCF and Chief Executive Officer, State Authority, CAMPA & Member Secretary.

At the outset, the Member Secretary welcomed Honourable Chief Secretary, Maharashtra State and Chairperson of the Steering Committee State Authority, Maha CAMPA and all other members of the Steering Committee for the meeting and presented the details via power point as per agenda:-

Agenda Item 1:- Compliance of the decision taken as per the last meeting of the Steering Committee held on 19th May, 2021.

Discussion:-

The Compliance of the decisions taken in last meeting was discussed. Steering Committee was apprised of the status of compliance of the decision taken in last meeting held on 19th May 2021 as below.

- The Steering Committee approved the APO 2021-22 for an amount of Rs. 688.27 Crores. against which the National Authority CAMPA has accorded approval to A.P.O. for an amount of Rs. 588.27 Crores vide MoEF & CC, New Delhi letter dated 02.07.2021 and 31.08.2021. The Status is as under :

Sanctioned APO 2021-22	Budget Allocation	Funds Released by State Government on BEAMS
588.27 Crores	650.00 Crores	487.5 Crores

- Extension to M/s A.S. Kulkarni & Associate, Chartered Accountant for carrying out reconciliation of CAMPA accounts for the year 2020-21 was granted upto March-2022. The reconciliation of CAMPA fund for the year 2020-21 is in progress and report is likely to be received by 31st March 2022.
- The unspent balance amount for the year 2020-21 has been utilized during the 2021-22 financial year with the permission of Government of Maharashtra vide Government resolution FLD-2020/C.R.102/F-10 dated 14/09/2021.
- Revenue and Forest Department has permitted expenditure of Rs.162.5 crore vide Government Resolution dt.12.10.2021

Decision:

The Steering Committee resolved to confirm the action taken in pursuance of the last meeting held on 19th May 2021.

Agenda Item 2:- Approval of the Annual Plan of Operation for the year 2022-23.

Discussion:-

Annual Plan of Operation for the year 2022-23 was discussed in detail.

The Steering Committee was apprised of the Preamble of the CAF Act, 2016 and various norms given in Section 5 and Section 6 of CAF Rules, 2018.

Further the letter from H'ble Minister of Environment, Forest and Climate Change, New Delhi addressed to H'ble Chief Minister of Maharashtra on 22.10.2020 was highlighted wherein it is reiterated that 80% of total allocation of CAMPA funds be used for activities related to development of forest and Wildlife (e.g Regeneration through Afforestation and ancillary activities, restoration of degraded land, catchment area treatment, wildlife habitat improvement etc.) and only the remaining 20% should be utilized for strengthening of forest and wildlife related infrastructure and capacity building etc.

Similarly the directives from Chairman, Executive Committee, National Authority were also highlighted.

Steering Committee was apprised about the component wise provisions made in the APO 2022-23 as below:

Sr. No.	Description	Components	Financial Provision (Rs. in Crore)
1	2	3	4
1	Site Specific works as per FCA approval	Compensatory Afforestation	60.42
		CAT Plan	14.47
		Integrated WLMP	1.00
		Others	9.93
		Sub Total (i)	**85.82**
2	Net Present Value	Works under not less than 80% of NPV Component (80.00% on Sub Total (ii))	496.18
		Works under not more than 20% of NPV Component (20.00% on Sub Total (ii))	124.07
		Sub Total (ii)	**620.25**
3	Accrued Interest	Works under not less than 60% Interest component (86.60% on Sub Total (iii))	13.50
		Works under not more than 40% Interest component (13.40% on Sub Total (iii))	2.0
		Sub Total (iii)	**15.50**
		Grand Total (i+ii+iii)	**721.57**

The APO was prepared in consonance with the provisions in CAF Rules 2018 and Directives from Government of India.

Dy. Director General, Integrated Regional Office, Nagpur opined that the activities proposed in APO be in consonance with the Working Plan.

CEO, Maha-CAMPA informed that Agenda No. 7 & 8 were added on the recommendation of the Executive Committee meeting held on 11.03.2022 and requested to consider them before remaining Agenda Items, as they are related to the main APO.

Agenda Item 7:- LiDAR Technology for Forest Management under CAMPA.

Discussion:-

LiDAR Technology is being adopted in Watershed Treatment in forests area. One such project is under implementation in Amravati District. Other project on similar lines for an area of 100000 Ha. is proposed to be undertaken. For LiDAR survey, an amount of Rs. 8.00 Crores is proposed to be allocated in APO 2022-23. Further, as & when DPR is prepared, appropriate provisions shall be made in future.

The Steering Committee was apprised about the application of latest technology namely "LiDAR" for watershed treatment in forest areas. The technology has got advantages as compared to physical survey. Further, it is informed that one project under CAMPA is underway in Chandur Railway & Wadali Ranges in Amravati District by using LiDAR Technology. The DPR was prepared by 'Water and Power Consultancy Services' (WAPCOS) Limited, New Delhi, a GOI undertaking.

On similar lines it is proposed to undertake New LiDAR project covering an area of 100000 ha. of forests in the State. Hence, provision of Rs. 8.00 Crores is proposed to be included in APO 2022-23 for carrying out LiDAR Survey.

Decision:

The Steering Committee approved the provision of Rs. 8.00 Crores to be included in APO 2022-23 subject to the conditions that all the norms and conditions as given in CAF Rules 2018 should be strictly complied with.

The provisions for LiDAR survey shall be made under Interest Component Head in the APO 2022-23. This Survey shall be done by appointing a competent public undertaking as a technical / transactional advisor.

Agenda Item 8:- Implementation of 'Mission Melghat' project under CAMPA Funds.

Discussion:-

In order to address livelihood issues in Melghat Area, certain forestry activities which may generate employment for Local tribal people are proposed to be undertaken under CAMPA.

Activities proposed are as follows:

- Ecosystem Restoration/ Fodder development (the degraded forest area will be restored with native grasses and native tree species along with soil and moisture conservation works)
- Soil and moisture conservation works in the forest
- All wildlife Management works like Rejuvenation of lakes & rivers, Meadow development, Creation & maintenance of water sources/water holes for wildlife, Eradication of invasive species etc.
- Construction, up-gradation and maintenance of inspection paths, forest roads in forest area, fire lines, watch towers, check posts.
- Casual engagement of local people or labours to assist regular staff of State Forest Department for works for protection of forest and wildlife undertaken.

In order to carry out such activities, a provision of Rs. 27.51 Crores needs to be allocated in the APO 2022-23.

Decision:

The Committee approved for the inclusion of Rs. 27.51 Crores in APO 2022-23 subject to the conditions that all the norms and conditions as stipulated in CAF Rules 2018 should be strictly complied with.

Decision Regarding Agenda No- 2, 7 & 8:

The Steering Committee resolved to approve the Annual Plan of Operations for the year 2022-23 as per the **Annexure-I** along with the inclusion of the provision for

LiDAR Survey and Mission Melghat as mentioned above, totalling for an amount of Rs. 757.08 Crores.

Agenda Item 3:- Status of Reconciliation and Internal Audit of CAMPA Funds for the year 2020-21

Discussion:-

The Steering Committee was apprised about the mandate of Government of India to maintain the Accounts on corporate lines. It was informed that the activity of Reconciliation & Recasting of books of Accounts of CAMPA Authority and its subordinate offices was undertaken for the year 2010-11 to 2019-20. All the books of accounts for the said period have been converted from Single Entry System to Double Entry System of book keeping. During this exercise, the State Authority was able to retrieve the fund lying idle with different Implementing Agencies amounting to the tune of Rs. 4.87 Crores. Because of this exercise, the State Authority is able to recognise the Assets generated for the period 2010-11 to 2019-20 in the books of accounts.

M/s A.S. Kulkarni & Associates were allotted the work of the reconciliation & preparation of books of accounts on double entry basis for the year 2020-21 & 2021-22 as per the terms & conditions of original Agreement which was approved by Steering Committee meeting dated 19th May 2021.

The Reconciliation work is under progress & the firm is likely to submit the reports for 2020-21 by March-2022. As the Financial year 2021-22 is not closed & the primary books i.e. Cash Book, of all subordinate offices are not complete, the work of reconciliation for 2021-22 shall be completed by June-2022.

Further, the Internal Audit for the year 2020-21 is completed & the report is likely to be received by March-2022.

In order to consolidate the gains of reconciliation exercise, it is proposed before committee to grant extension to M/s A.S. Kulkarni & Associates, Nagpur for further one year upto March-2023 for carrying out reconciliation of CAMPA accounts for the year 2022-23.

Decision:

The Steering Committee resolved to grant extension to the M/s A.S. Kulkarni & Associates, Chartered Accountant up to 31st March 2023 to carryout reconciliation of CAMPA accounts for the year 2022-23 on the same terms and conditions as

embodied in earlier agreement. The chairman directed to comply with existing guidelines in this regard.

Agenda Item 4 :- Approval to the Annual Financial Statement for 2017-18 & 2018-19 as per the reconciliation / recasting exercise as suggested by Accountant General (Audit-II), Nagpur.

Discussion:-

Accountant General (Audit-II), Nagpur has conducted the Audit of State CAMPA for the year 2017-18 & 2018-19.

Further, the report of Recasting, Reconciliation work was submitted to the Audit Team alongwith Recasted Financial Statements for the years 2017-18 & 2018-19 for the consideration.

The Audit had issued the memos for Understatement, Overstatement of Assets, Liability, Income, Expenditure etc. on the basis of the reconciliation report submitted to them. The Authority had requested to consider the Recasted Financial Statements as the same are in compliance with the Audit Memos. It was directed by Audit to get approval of Redrafted Financial Statements 2017-18 & 2018-19 by the Executive Committee & Steering Committee for consideration of the same for the Audit.

Hence, Redrafted Financial Statements are placed before the Steering Committee for the approval.

Decision:

The Steering Committee resolved that the Redrafted Annual Financial Statements for the year 2017-18, 2018-19 are reverted back to Executive Committee, State Authority for review. The Chairman directed to avoid such delays in future.

Agenda Item 5:- Approval to the Audited Accounts for the year 2019-20.

The Audited Accounts for the year 2019-20 are placed before committee.

Decision:

The Steering Committee resolved that the Audited Accounts for the year 2019-20 are reverted back to Executive Committee, State Authority for review.

Agenda Item 6:- An effective & efficient Funds Distributions and Management System to be created at State CAMPA through Digital Banking Solution like PFMS System.

Discussion:-

The Steering committee was apprised of Public Financial Management System (PFMS). The Steering Committee resolved that the digital banking solution should be such that it not only facilitates Funds Distribution System but along with it, facilitates account generation also. It should be an integrated system. The specific requirement of Fund Management System be designed and then Expression of Interest (EOI)/Invitation of Proposals (IOP) should be invited.

The Steering Committee was apprised that Executive Committee has taken decision on similar lines in their meeting dated 11.03.2022.

Decision:

Steering Committee resolved to consider the proposal as and when aforesaid activity is completed.

Agenda Item 9:- Appraisal and sanction of items as per minutes of meeting of Executive Committee, State Authority (Maha CAMPA) dated 17.01.2022 & 11.03.2022.

The Steering Committee resolved that there is no need to confirm the minutes of meeting of Executive Committee if the matter is well within the competence of Executive Committee.

Meeting ended with the vote of thanks to the Chair and all the members of the Steering Committee.

Annexure-I

Annual Plan of Operations 2022-23

Sr. No.	Description	Components	Financial Provision (Rs. in Lakhs)
1	2	3	4
1	Site Specific works as per FCA approval	Compensatory Afforestation (CA-01)	6042.00
		CAT Plan (CAT-02)	1447.00
		Integrated WMP (IWMP-03)	100.00
		Conditional Works (Other-06)	993.00
		Sub Total (i)	**8582.00**
2	Net Present Value (NPV-04)	Works under 80% NPV Component (80.04% on Sub Total (ii))	51844.00
		Works under 20% NPV Component (19.96% on Sub Total (ii))	12932.00
		Sub Total (ii)	**64776.00**
3	Accrued Interest (NPV-05)	Works under 60% Interest component (91.49% on Sub Total (iii))	2150.00
		Works under 40% Interest component (8.51% on Sub Total (iii))	200.00
		Sub Total (iii)	**2350.00**
		Grand Total (i+ii+iii)	**75708.00**

Annual Plan of Operation 2022-23

Abstract of Circle wise allocation for Site Specific works as per FCA approval

(Rs. In Lakhs)

Sr. No.	Implementing Agencies	CA (01)							CAT Plan (02)	IWM Plan (03)	Conditioanl Works (06)			Grand Total CA (9+10+11+14)
		PPO		FYO		Maintenance		Total CA (4+6+8)			Plantation	Other (SMC Works, Protection Works, etc.)	Total Others (12+13)	
		Area (ha.)	Amount	Area (ha.)	Amount	Area (ha.)	Amount							
1	2	3	4	5	6	7	8	9	10	11	12	13	14	15
1	APCCF (WL) East, Nagpur							-				164.72	164.72	**164.72**
2	APCCF (WL) West, Mumbai		-			6.550	1.25	1.25					-	**1.25**
3	APCCF, Mangrove Cell, Mumbai					7.000	2.25	2.25					-	**2.25**
4	CCF (T) Amravati			4.710	4.88	353.229	70.29	75.17					-	**75.17**
5	CF (T) Aurangabad	843.132	2,454.16			455.309	100.21	2,554.37			0.52		0.52	**2,554.89**
6	CCF (T) Chandrapur	40.000	148.07	64.000	69.04	1,307.198	256.92	474.02			24.33		24.33	**498.35**
7	CF (T) Dhule	255.300	816.43			1,116.040	233.78	1,050.20	243.83		29.07	78.29	107.36	**1,401.39**
8	CF (T) Gadchiroli			7.000	5.51	1,061.448	211.63	217.14			24.55		24.55	**241.69**
9	CCF (T) Kolhapur	34.140	99.39	16.830	13.01	343.530	50.13	162.53					-	**162.53**
10	CCF (T) Nagpur	98.140	258.71	73.000	75.59	1,657.672	370.87	705.16	319.33	100.00	21.54	468.86	490.40	**1,614.90**
11	CCF (T) Nashik			9.738	10.08	887.160	163.27	173.35			1.41		1.41	**174.76**
12	CCF (T) Pune	1.056	3.07			197.423	32.79	35.86					-	**35.86**
13	CCF (T) Thane	3.528	10.27	71.127	53.42	1,059.551	222.17	285.86	881.25		173.47	2.10	175.57	**1,342.68**
14	CF (T) Yavatmal					988.840	304.53	304.53	3.05		3.63		3.63	**311.21**
	Total	**1275.296**	**3,790.09**	**246.405**	**231.52**	**9,440.949**	**2,020.09**	**6,041.70**	**1,447.47**	**100.00**	**278.52**	**713.97**	**992.49**	**8,581.66**

Abstract for Circle wise allocation of NPV & Interest Component under APO 2022-23

(Rs. in Lakhs)

Sr. No.	Implementing Agencies	NPV (04)	Interest (05)	Total (3+4)
1	2	3	4	5
1	CCF (T) Amravati	6,130.50	-	**6,130.50**
2	CCF (T) Aurangabad	1,465.00	-	**1,465.00**
3	CCF (T) Chandrapur	1,210.00	-	**1,210.00**
4	CCF (T) Dhule	2,535.00	-	**2,535.00**
5	CCF (T) Gadchiroli	3,288.00	-	**3,288.00**
6	CCF (T) Kolhapur	1,738.50	-	**1,738.50**
7	CCF (T) Nagpur	4,542.00	-	**4,542.00**
8	CCF (T) Nashik	4,477.50	-	**4,477.50**
9	CCF (T) Pune	3,686.00	-	**3,686.00**
10	CCF (T) Thane	2,461.00	-	**2,461.00**
11	CCF (T) Yavatmal	3,733.00	-	**3,733.00**
Total for Territorial Wing (1 to 11)		**35,266.50**	-	**35,266.50**
12	PCCF (WL) M.S. Nagpur	16,840.00	-	**16,840.00**
13	APCCF (WL) East, Nagpur	2,754.00	-	**2,754.00**
14	APCCF (WL) West, Mumbai	1,398.50	-	**1,398.50**
15	CCF & FD, MTR, Amravati	4,100.00	-	**4,100.00**
Total for Wildlife Wing (12 to 15)		**25,092.50**	-	**25,092.50**
16	PCCF (ITP) M.S. Nagpur	950.00	-	**950.00**
17	APCCF, Mangrove Cell, Mumbai	40.00	-	**40.00**
18	APCCF (RET) Pune	2,203.00	-	**2,203.00**
19	CCF (Evaluation) Nagpur	2.00	-	**2.00**
20	PIO, Nagpur	150.00	-	**150.00**
21	CEO, Maha CAMPA	1,072.00	2,350.00	**3,422.00**
	Grand Total	**64,776.00**	**2,350.00**	**67,126.00**

ANNUAL PLAN OF OPERATIONS 2022-23

ABSTRACT OF COMPONENT WISE ALLOTMENT FOR NPV WORKS

(Amount in Rs. Lakhs)

Rule No.	Particulars of work	Proposed for APO 2022-23			%
		Unit in	Phy	Fin	
1	2	3	4	5	6
5 (2)	**Works under Not less than 80 % component (Rule 5 (2))**				
5(2)(a)	**Assisted Natural Regeneration**				
i	PPO Works	Ha	1321.000	2232.00	3.45
ii	FYO Works	Ha	820.000	572.00	0.88
	Total of 5(2)(a)		2141.000	2804.00	4.33
5(2)(b)	**Artificial Regeneration**				
i	Artificial Regeneration (PPO) (Mission Melghat)	Ha.	75.000	82.50	0.13
ii	Artificial Regeneration 4th YO Works	Ha	8531.930	1537.00	2.37
iii	Plantation along river banks (as per ICFRE DPR) (National Authority Scheme)	LS	0	300.00	0.46
iv	Afforestation in scrub and barren land (National Authority Scheme) LIDAR	Ha	350.000	663.00	1.02
v	Gramvan Plantation (Manitainance)	Ha	61.000	11.00	0.02
	Total for Artificial Regeneration		9017.930	2593.50	4.00
5(2)(c)	**Silvicultural operations in forests**				
i	Fodder Development (PPO Works)	Ha	1466.360	3343.00	5.16
ii	Fodder Development (PPO Works) (Mission Melghat)	Ha	200.000	200.00	0.31
iii	Fodder Development (FYO Works)	Ha	1874.000	2023.00	3.12
iv	Fodder Development (SYO Works)	Ha	2703.000	1975.00	3.05
v	Cutback Operations	Ha	90.000	8.00	0.01
	Total for Silvicultural operations in forests		6333.360	7549.00	11.65
	Forest Protection				
5(2)(d)	**Protection of plantations and forests**				
i	Encroachment removal & Forest Protection	Rmt	33054	1041.00	1.61
ii	Survey, Demarcation & Fencing of Sensitive forest areas	Rmt	70874	2834.00	4.38
iii	Boundary Pillar Class I	No.	18425	1475.00	2.28
iv	Boundary Pillar Class I I	No.	10299	413.00	0.64

Rule No.	Particulars of work	Proposed for APO 2022-23			%
		Unit in	Phy	Fin	
1	2	3	4	5	6
v	Construction, upgradation and maintenance of :				
(a)	Protection camps/Protection Huts	No.	79	1580.00	2.44
(b)	Forest Custody	No.	6	138.00	0.21
(c)	Labour Shed	No.	48	316.00	0.49
vi	Construction, upgradation and maintenance of Protection camps/Protection Huts/Forest Custody/Labour Shed (Mission Melghat)	No.		340.00	0.52
vii	Establishment and maintenance of wireless networks	No.	59	116.00	0.18
viii	Establishment and maintenance of wireless networks (Mission Melghat)	No.	24	60.00	0.09
ix	Improving mobility of frontline staff for forest protection & patrolling.	LS	0	148.00	0.23
	Total for Protection of plantations and forests		132868	8461.00	13.06
5(2)(e)	**Pest and disease control in forest**	Ha.	63	2.00	0.00
5(2)(f)	**Forest fire prevention and control operations**				
i	Cutting and burning of fire lines	Km	26362	766.00	1.18
ii	Fire watchers	No.	28433	750.00	1.16
	Total for Forest fire prevention and control operations		54795	1516.00	2.34
	Total for Forest Protection		187726	9979.00	15.41
5(2)(g)	**Soil and moisture conservation works in the forest**				
i	Construction of Gabiyan Bandhara	No.	1141	588.00	0.91
ii	Construction of Gabiyan Bandhara (Mission Melghat)	No.	654	261.50	0.40
iii	Construction of Cement Bandhare	No.	158	2370.00	3.66
iv	Construction of Cement Bandhare (Mission Melghat)	No.	80	800.00	1.24
v	Construction of check dams	No.	81	52.00	0.08
vi	Creation of Forest ponds/Vantale/Khodtadi	No.	379	1137.00	1.76
vii	Deep CCT	Ha/Rmt	1253 / 3345	769.00	1.19
viii	Earthen/Mati Nala Bunds	No.	247	747.00	1.15
ix	Construction of LBS Structure (Mission Melghat)	No.	500	90.00	0.14
x	**Soil and Water Conservation / Harvesting works (National Authority Scheme) LIDAR**	LS	0	1000.00	1.54
	Total for SMC works		3240	7814.50	12.06

Rule No.	Particulars of work	Proposed for APO 2022-23			%
		Unit in	Phy	Fin	
1	2	3	4	5	6
	Wildlife Management & Man-animal conflict mitigation				
5(2)(h)	**Voluntary relocation of villages from Protected areas (including cost of land and other property of the field owners)**	**No.**	**48**	**10000.00**	**15.44**
5(2)(i)	**Improvement of wildlife habitat as provided in the approved wildlife management plan or working plan**				
i	All wildlife Management works will be carried out as per approved Management plan	**No.**	**15**	**4000.00**	**6.18**
ii	Medow development	**Ha.**	**2800.370**	**784.00**	**1.21**
iii	Creation & maintenance of water sources/water holes for wildlife	**No.**	**1142**	**764.00**	**1.18**
iv	Creation & maintenance of water sources/water holes for wildlife (Mission Melghat)	**No.**		**120.00**	**0.19**
v	Eradication of invasive species	**Ha.**	**8302.300**	**884.00**	**1.36**
vi	Eradication of invasive species (Mission Melghat)	**Ha.**	**1600.000**	**272.00**	**0.42**
	Total for Improvement of wildlife habitat		**13860**	**6824.00**	**10.53**
5(2)(j)	Planting and rejuvenation of forest cover on non-forest land falling in wildlife corridors	**LS**	**0**	**3.00**	**0.00**
5(2)(k)	**Establishment, operation and maintenance of animal rescue centre and veterinary treatment facilities for wild animals**				
i	Establishment, operation and maintenance of animal rescue centre/ Transit treatment Centre (Imcluding Provision for Gorewada)	**No./LS**	**13**	**1377.00**	**2.13**
ii	Veterinary treatment facilities for wild animals (Imcluding Provision for Gorewada)	**No./LS**	**4**	**304.00**	**0.47**
iii	Animal seizing & capturing devices	**No./LS**	**189**	**406.00**	**0.63**
iv	Rescue emergency operations	**No./LS**	**6**	**426.00**	**0.66**
v	Strengthening of Rapid rescue teams	**No./LS**	**6**	**197.00**	**0.30**
vi	Management of rewilding of tiger cubs	**LS**	**0**	**40.00**	**0.06**
	Total		**218**	**2750.00**	**4.25**
5(2)(l)	Supply of wood-saving cooking appliances and other forest produce saving devices in forest fringe villages as specified by the National Authority from time to time	**No.**	**7250**	**135.00**	**0.21**
	Total for Wildlife Management & Man-animal conflict mitigation		**21376**	**19712.00**	**30.43**
5(2)(m)	**Management of biological diversity and biological resource**				
i	New research projects and Maintenance of Ongoing Project by research wing of Maharashtra Forest Department	**No.**	**11**	**357.00**	**0.55**
ii	Base studies for forestry and wildlife related subjects	**No.**	**4**	**158.00**	**0.24**

Rule No.	Particulars of work	Proposed for APO 2022-23			%
		Unit in	Phy	Fin	
1	2	3	4	5	6
iii	Conservation of Wildlife like GIB, Wild buffalo, Turtle, Vultures, Owl, Sparrow, etc.	No.	5	877.00	1.35
	Total		20	1392.00	2.15
	Grand Total for Activities under not less than 80% component		229854	51844.00	80.04
5 (3)	**Works under not more than 20 % component (Rule 5 (3))**				
5(3)(a)(i)	**Establishment, up-gradation and maintenance of modern nurseries and other planting stock production facilities for production of quality planting materials**	No.	10	150.00	0.23
5(3)(a)(ii)	**Establishment, up-gradation and maintenance of modern nurseries and other planting stock production facilities for production of quality planting materials (Mission Melghat)**	No.		90.00	0.14
	Total of 5(3)(a)		10	240.00	0.37
5(3)(b)	**Promoting conservation, sustainable use and documentation of biological diversity including preservation of habitats, conservation of land and folk varieties and cultivars, domesticated stocks and breeds of animals and microorganisms and chronicling of knowledge relating to biological diversity**				
i	Documentation and Publications of study materials for FTIs	LS	0	60.00	0.09
ii	Conducting Workshops/Trainings/Seminars/ Conferences for promoting conservation & sustainable use of biological diversity and capacity building of the frontline staff & officers.	No.	48	165.00	0.25
iii	Capacity building and gender sensitization of Forest Staff's through FTI /TERI/Forest academies/other institutions/CFRMC/JFMC /PRI	No.	476	2000.00	3.09
iv	Improving training inputs through guest faculties in Forest Training Institutes / Forest Academies	LS	0	20.00	0.03
	Total		524	2245.00	3.47
5(3)(c)	Purchase and maintenance of equipment or devices used for communication and information technology for the purpose of protection of forest and wildlife/AMC		0	950.00	1.47
5(3)(d)	**Construction, up-gradation and maintenance of :**				
i	Inspection paths/Forest roads in forest area,	Km/No	1121	296.00	0.46
ii	flush causway	No.	101	380.00	0.59
iii	watch towers,	No.	30	300.00	0.46
iv	Check posts/Check Naka	No.	11	99.00	0.15
v	**Construction, up-gradation and maintenance of Inspection paths/Forest roads in forest area/flush causway/watch towers /Check posts/Check Naka (Mission Melghat)**	No.		210.00	0.32
	Total of 5(3)(d)		1263	1285.00	1.98

Rule No.	Particulars of work	Proposed for APO 2022-23			%
		Unit in	Phy	Fin	
1	2	3	4	5	6
5(3)(e)	**Construction of residential and official buildings in forests for front line staffs deployed for protection of forest and wildlife**				
i	Construction of Type I Quarters	No.	93	2046.00	3.16
ii	Construction of Type-1 (G+2) 4 Units Residental Building for Special Tiger Protection Force (STPF)	No.	3	541.00	0.84
iii	Construction of Type II Quarters	No.	48	1248.00	1.93
iv	Construction of Type III Quarters	No.	36	1296.00	2.00
v	Construction of Range office	No.	37	1665.00	2.57
vi	Amenities for Woman Front line staff	No.	19	266.00	0.41
	Total New Constructions		236	7062.00	10.90
5(3)(f)(i)	Casual engagement of local people or labours to assist regular staff of State Forest Department for works for protection of forest and wildlife undertaken from State Fund	No.	0	80.00	0.12
5(3)(f)(ii)	Casual engagement of local people or labours to assist regular staff of State Forest Department for works for protection of forest and wildlife undertaken from State Fund (Mission Melghat)	No.	0	225.00	0.35
5(3)(g)	Survey and mapping of forest areas for forest fire control, compensatory afforestation works, soil and moisture conservation, catchment area treatment and wildlife management for preparing annual plans to be executed from the State Fund	LS	0	100.00	0.15
5(3)(h)	Independent concurrent monitoring and evaluation and third party monitoring of various works undertaken from State Fund	LS	0	202.00	0.31
5(3)(i)	Publicity-cum-awareness programme and exhibition on the various schemes being implemented by the State Authority from State Fund (including Nature Awareness Program conduct by METDB)	LS	0	343.00	0.53
5(3)(j)	Production and distribution of quality planting material through certified nurseries at subsidized price for promotion of trees outside forests on Government lands promoted by State Government {Saplings for planned afforestation activities in the area under control / management of the Central Armed Police Forces (CAPFs) (As per National Authority Instructions)}	LS	0	200.00	0.31
5(3)(k)	forest certification and development of certification standards	LS	0	0.00	0.00
	Total for works under not more than 20% component		2033.33	12932.00	19.96
	Grand Total for NPV			64776.00	100.00

ANNUAL PLAN OF OPERATIONS 2022-23

Interest Component

(Amount in Rs. Lakhs)

Rule No.	Particulars of work	APCCF & CEO (Maha CAMPA) Level	Percentage
		Amount	
1	2	3	4
6	**Utilisation of interest accrued on deposits in State Fund**		
6 (a)	**Not less than sixty percent**		
i	to offset the incremental cost of compensatory afforestation and penal compensatory afforestation at the increased wage rates	500.00	21.28
ii	to offset the incremental cost of catchment area treatment plan at the increased wage rates	200.00	8.51
iii	to offset the incremental cost of wildlife management plan at the increased wage rates	50.00	2.13
iv	for disbursement of salary and allowances of members and staffs, both regular and contractual, of the State Authority	400.00	17.02
v	for disbursement of sitting fees and allowances to nominated members of the State Authority	100.00	4.26
vi	Activities referred to in sub rules 2 and 3 of Rule 5 (including LiDAR Survey)	900.00	38.30
	Total for 6 (a)	2150.00	91.49
6 (b)	**Not more than forty percent**		
i	Management of office establishment	50.00	2.13
ii	Office equipment including computers and peripherals and its maintenance for the State Authority	50.00	2.13
iii	Hiring of staff cars for the use of the officers and officials of the State Authority	50.00	2.13
iv	Hiring of buildings on lease for the office establishment and residences of the officers of State Authority	50.00	2.13
	Total for 6 (b)	200.00	8.51
	Total	2350.00	100.00

Part – I

Part-I Brief History and past performance

A. Brief description of forests and forestry sector in the State.

1.0 Introduction

1.1 Situated in the western peninsular region of the country, Maharashtra has geographical area of 3,07,713 sq km, which is 9.36% of the geographical area of the country. The State lies between 15°35' N to 22°02' N latitude and 72°36' E to 80°54' E longitude and state is bordered by Gujarat & Madhya Pradesh in the north, Chhattisgarh in the east, Telangana, Karnataka and Goa in the south and Arabian sea on the west. The State has three physiographic zones namely Deccan Plateau, Western Ghats and West Coast. It experiences a tropical monsoon climate with hot, rainy and cold weather seasons and dry summers. The annual rainfall ranges between 400 mm to 6,000 mm and the annual temperature varies from 25°C to 27°C. The State is drained by number of rivers which include Godavari, Bhima, Narmada, Tapti, Koyna and Krishna. The State has 36 districts, amongst which 12 are tribal and 7 are hill districts. As per the 2011 census, Maharashtra has a population of 112.37 million accounting to 9.28% of India's population. The rural and urban population constitutes 54.78% and 45.22% respectively. The tribal population of the State is 9.35%. The population density of the State is 365 per sq km, which is close to the national average. The 19thLivestock census 2012 has reported a total livestock population of 32.48 million in the State.

TABLE-1 : Land Use Pattern

Land Use Types	Area (in 000' ha)	Percentage
Geographical Area	30,771	
Reporting area for land utilization	30,742	100.00
Forests	5,220	16.98
Not available for land cultivation	3,485	11.34
Permanent pastures and other grazing lands	1,287	4.19
Land under misc. tree crops and groves	256	0.83
Culturable wasteland	924	3.01
Fallow land other than current fallows	1,261	4.10
Current fallows	1,366	4.44
Net area sown	**16,943**	**55.11**

Source: Indian State of Forest Report 2021

1.2 Maharashtra, the third largest State in the country is ranked second among the States in terms of the recorded forest area. Western Ghats of the State have very rich biodiversity. As per the Champion & Seth Classification of Forest Types (1968), the forests in Maharashtra belong to six Forest Type Groups which are further divided into 17 Forest Types. The high rural population of the State depends on the forests considerably for livelihood and basic needs.

1.3 Recorded Forest Area (RFA) in the State is 61,579 sq km of which 49,546 sq Km is Reserved Forests, 6,733 sq km is Protected Forest and 5,300 sq km is Unclassed Forests. In Maharashtra, during the period 1st January 2015 to 5th February 2019, a total of 3797.16 hectares of forestland was diverted for non-forestry purposes under the Forest Conservation Act, 1980 (MoEF& CC, 2019). As per the information received from the SFD, a total area of 1,47,814 ha has been notified as reserved forests during 2014 to 2019.

Six National Parks, 50 Wildlife Sanctuaries and 12 Conservation Reserves constitute the Protected Area network of the State covering 3.30% of its geographical area.

2.0 Forest Cover

Based on the interpretation of IRS Resourcesat-2 LISS III satellite data of the period Oct 2017 to Jan 2018, the Forest Cover in the State is 50,797.76 sq km which is 16.51 % of the State's geographical area. In terms of forest canopy density classes, the State has 8733.75 sq km under Very Dense Forest(VDF), 20,589.00 sq km under Moderately Dense Forest (MDF) and 21,475.01 sq km under Open Forest (OF). Forest Cover in the State has increased by 95.56 sq km as compared to the previous assessment reported in ISFR 2019.

TABLE–2 ForestCoverofMaharashtra (in sq km)

Class	Area	% of GA
VDF	8,733.75	2.84
MDF	20,589.00	6.69
OF	21,475.01	6.98
Total	**50,797.76**	**16.51**
Scrub	4,247.39	1.38

Forest Cover of Maharashtra

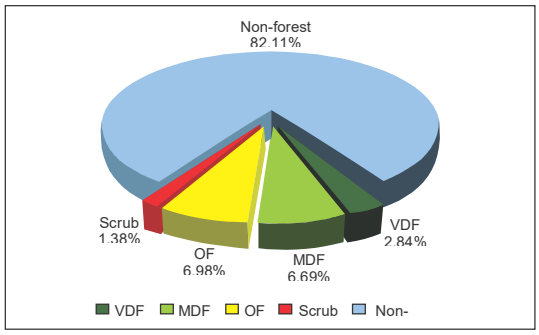

Source: Indian State of Forest Report 2021

3.0 Forest Cover inside and outside Recorded Forest Area (or Green Wash)

The State has reported extent of recorded forest area (RFA) 61,579 sq km which is 20.01% of its geographical area (2019). The reserved, protected and unclassed forests are 80.46%, 10.93% and 8.61% of the recorded forest area in the State respectively. However as the digitized boundary of recorded forest area from the state covers 56,373.92 sq km and the analysis of forest cover inside and outside this area is depicted below.

Recorded forest area as per recent Annual Administration Report 2020 in 61952 sq km in the State.

TABLE–3 Forest Cover inside and outside Recorded Forest Area or (Green Wash) in Maharashtra

Forest Cover inside the Recorded Forest Area (or Green Wash)				**Forest Cover outside the Recorded Forest Area (or Green Wash)**			
VDF	**MDF**	**OF**	**Total**	**VDF**	**MDF**	**OF**	**Total**
8,476	15,068	12,496	36,040	258	5,521	8,979	14,758
23.52%	41.81%	34.67%		1.75%	37.41%	60.84%	

Source: Indian State of Forest Report 2021

TABLE–4 Forest Cover Change Matrix for Maharashtra

Class	**2021 Assessment**					**Total ISFR 2017**
	VDF	**MDF**	**OF**	**Scrub**	**NF**	
Very Dense Forest	8,704	6	2	0	9	8,721
Moderately Dense Forest	29	20,491	8	0	44	20,572
Open Forest	0	86	21,301	3	95	21,485
Scrub	0	0	38	4,189	29	4,256
Non Forest	1	6	126	55	2,52,491	2,52,679
Total ISFR 2019	**8,734**	**20,589**	**21,475**	**4,247**	**2,52,668**	**3,07,713**
Net Change	13	17	-10	-9	-11	

Source: Indian State of Forest Report 2021

4. The Forest Administration:

The forest area of the state is primarily managed by the Territorial forestry wing and the Wildlife wing. The Forest Department has 11 territorial forest circles and 51 divisions/ independent sub-divisions in Maharashtra. Territorial Forest Divisions / Sub-divisions are further subdivided into Territorial Ranges, Rounds and Beats and is headed by the PCCF (HoFF). There are, in all 5631 territorial beats, 1490 territorial Rounds, and 379 territorial Ranges in Maharashtra.Thereis an extensive network of Protected areas within the state comprising of 6 National Parks, 50 Wildlife Sanctuaries and 12 Conservation Reserves. Besides, The Forest Development Corporation of Maharashtra Ltd. (FDCM) works on specific forest areas assigned to it by the Government on a long-term lease basis and is headed by a Managing Director of the rank of PCCF. The Social Forestry wing tackles non-forest lands for increasing tree cover outside forest areas and isheaded by an officer of the rank of PCCF.

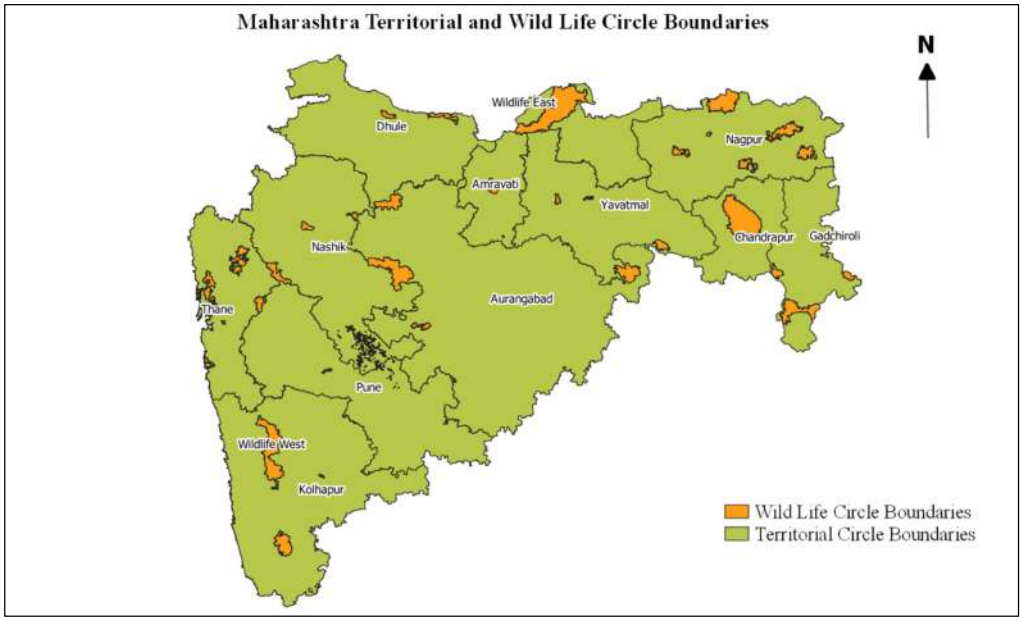

5.0 The Protected Area Network:

Total 10177.841 sq. km area is under Protected Area Network (National Parks, Wildlife Sanctuaries and Project Tiger Area) in the State. Maharashtra has 68 Wildlife Protected Areas (PAs) that include 6 National Parks with area of 1269.270 sq. km., 50 sanctuaries with area of 7905.391 sq. km. and 12 Conservation Reserves with area of 1003.180 sq. km. It has the distinction of having 6 Tiger Reserves, viz. Tadoba-Andhari Tiger Reserve, Melghat Tiger Reserve, Pench Tiger Reserve, Navegaon-Nagzira Tiger Reserve, Sahyadri Tiger Reserve and Bor Tiger Reserve.

6.0 Brief description of CAMPA:

6.1 The Forest (Conservation) Act, 1980 contemplates for the prior approval of the Central Government for the use of forest land for non-forestry purposes. The procedure for obtaining the prior approval of the Central Government and subsequent diversion of forest land by the State Government is laid down in the Rules made under the said Act. Apart from this, the Central Government has also issued certain clarifications about various aspects regarding the implementation of the Forest (Conservation) Act, 1980. As per these guidelines, the Compensatory Afforestation (CA) is one of the most important requirements/conditions for the prior approval of the Central Government for diversion of forest land for non-forestry purposes. In fact the purpose of the Compensatory Afforestation is to compensate the loss of 'land-by-land' and loss of 'trees-by-trees'. The guidelines further stipulate that any proposal submitted by the State Government seeking prior approval of the Central Government must have a comprehensive scheme for Compensatory Afforestation, duly approved by the Competent Authority of the concerned State.

6.2 The prior approval is accorded by the Central Government in two stages, namely the in-principle approval (Stage-1approval) and the formal approval (Stage-2 approval). The in-

principle approval stipulates certain conditions including the provisions for non forest land for Compensatory Afforestation in lieu of the forest land being diverted, deposition of cost of Compensatory Afforestation and Net Present Value by the User Agency, mutation of the CA land in favour of the Forest Department, notification u/s.4 of the Indian Forest Act, 1927 of such Compensatory Afforestation land and certain other conditions as may be deemed fit by the Central Government. Once the conditions laid down in the in-principle approval are fulfilled by the User Agency and the State Government, the Central Government accords formal approval. Based on such formal approval by the Central Government, the State Government, which is the owner of the forest land issues the orders for use of forest land for non forestry purposes. Such order from the State Government is also called the order for diversion of forest land.

6.3 Before the CAMPA mechanism, the cost towards the CA etc. was used to be deposited by the User Agency in the form of Demand Draft in favour of the concerned DCF, who in turn used to deposit the same in the 'Forest Deposit'. Such amount was thereafter utilized by drawing from the Forest Deposit as and when required to fulfill the Stage-I conditions. Hon'ble Supreme Court, while deciding an Interlocutory Application No.566 in Writ Petition 202/1995, vide its order dated 29/10/2002, on the basis of a report submitted by the Central Empowered Committee, directed for the constitution of a 'Compensatory Afforestation Fund'(hereafter referred as 'CAF') and directed that the User Agency shall deposit the Compensatory Afforestation cost and also deposit into the said fund, the net present value of the forest land diverted for non-forest purposes.

6.4 Hon'ble Supreme Court further observed that the funds would not be part of the General Revenue of the Union of the States or part of the Consolidated Funds of the India. The directions given by the Hon'ble Supreme Court are summarised as under.-

6.4.1 Government of India, in consultation with CEC should frame the rules regarding constitution of a body and management of the Compensatory Afforestation Fund.

6.4.2 Compensatory Afforestation Funds that had not yet been realized as well as the unspent funds already realized by the States should be transferred to the said body within six months of its constitution by the respective States and the user agencies.

6.4.3 For getting permission for diverting forest land for non forest purposes, under Forest (Conservation) Act, 1980, the user agency should also pay into the said fund the Net Present Value of the forest land so diverted.

6.4.4 Site specific plans for artificial regeneration, assisted natural regeneration, protection of forests and other related activities should be prepared and implemented in a time bound manner.

6.4.5 The funds received from the user agency in cases where forest land diverted fell within Protected Areas should be used exclusively for undertaking protection and conservation activities in protected areas of the respective States/Union Territories.

6.4.6 An independent system of concurrent monitoring and evaluation should be evolved and implemented through the Compensatory Afforestation Fund to ensure effective and proper utilization of funds.

6.5 As per the above said directives of the Hon'ble Supreme Court, the MoEF&CC vide Notification dated 23/04/2004, constituted the Compensatory Afforestation Fund Management and Planning Authority as an authority under sub-Section (3) of Section 3 of the Environment (Protection) Act, 1986 to manage the CAF. This notification provided for the composition of CAMPA at the Central level, at the State level and for the powers and functions of various bodies of CAMPA and State CAMPA, the constitution of the CAF and the management of CAF and the mechanism for monitoring and evaluation.

6.6 Based on the directives given by the Hon'ble Supreme Court vide its order dated 26/09/2005 certain amendments were carried out in the above mentioned notification dated 23/04/2004 by way of subsequent notification issued by the MoEF&CC on 13/03/2007. This notification envisaged that CAMPA should have corporate accounting based on double entry system and auditing of its accounts should be conducted by the Comptroller and Auditor General of India.

6.7 After taking a note of the fact that comprehensive rules, procedure and composition of a Body for management of the Compensatory Afforestation Funds has not been finalized by the MoEF&CC with the concurrence of Central Empowered Committee (CEC) and that the CAMPA had not become operational, Hon'ble Supreme Court directed vide order dated 05/05/2006 for the constitution of an ad-hoc body comprising of the Director General of Forests and Special Secretary, MoEF as Chairman, Inspector General of Forests, a representative of the Comptroller and Auditor General and a nominee of the Chairman of the Central Empowered Committee till CAMPA becomes operational tooversee the collection and utilization of CAF.

6.8 Accordingly, Ad-hoc CAMPA came into operation and the funds, in terms of the said Order, which were lying with the State Government, were transferred to the Bank Accounts of the Ad-hoc CAMPA in the year 2006. Subsequent to the constitution of the Ad-hoc CAMPA, the CAF was opened in the scheduled banks for each State and Union Territories and the States were directed to deposit all compensatory levies in the State specific CAF bank account and to transfer all unspent funds deposited with the Government to the CAF account in the future.

6.9 Hon'ble Supreme Court vide its order dated 16th September, 2006 clarified that the cases which had been granted in-principle clearance before Supreme Court order dated 20th October, 2002 and final clearance after that date would also have to pay the NPV. Vide order dated 28th March 2008,Hon'ble Supreme Court fixed the rates of NPV, for a period of three years, subject to revision after every three years. Accordingly, the MoEF&CC vide letter dated 05/02/2009 prescribed the rates of NPV and laid down detailed guidelines in respect of NPV. Such NPVs have never been revised till date.

6.10 On 13th August, 2009 National CAMPA Advisory Council was constituted. The MoEF&CC issued detailed guidelines in respect of State CAMPA on 10th July, 2009.

6.11 Hon'ble Supreme Court, on 10/07/2009 in Interlocutory Application No.2143 of Writ Petition 202/1995 observed as under.-

Substantial amount of funds have been received by the Ad-hoc CAMPA and sudden release and utilization of this large sum all at one time may not be appropriate and may lead to its improper use without any effective control on expenditure.

With the above observations, Hon'ble Supreme Court permitted the Ad-hoc CAMPA to release a sum of 1000 Crore per year for the next five years in proportion of 10% of the principle amount pertaining to the respective State/UT. Accordingly, funds limit to Rs.1000 Crore per annum were released to various States during the period from 2009 to 2014.

6.12 Further Hon'ble Supreme Court vide order dated 12/03/2014 in Writ Petition 202/1995 permitted the Ad-hoc CAMPA to release annual amounts equal to 10% of the principal amount lying to the credit of each State/Union Territory, out of the interest receivable by it with effect from the financial year 2014-15 onwards.

6.13 Before the enactment of Compensatory Afforestation Fund Act, 2016, the State CAMPA was functioning with a mandate to promote:

6.13.1 conservation, protection, regeneration and management of existing natural forests;

6.13.2 conservation, protection and management of wildlife and its habitat within and outside protected areas including the consolidation of the protected areas;

6.13.3 compensatory afforestation; and

6.13.4 environmental services, research, training and capacity building.

It was to function through a three-tier, committee hierarchy:

- Governing Body headed by Hon'ble Chief Minister, mandated to lay down the broad policy framework for functioning of State level CAMPA and review its working from time to time.
- Steering Committee headed by the Chief Secretary, mandated to lay down and approve rules and procedures for the functioning of the body and its Executive Committee. Its responsibilities included monitoring utilization of State CAMPA fund, approving the Annual Plan of Operation (APO), the annual reports and audited accounts of the State CAMPA.
- Executive Committee headed by the Principal Chief Conservator of Forests of the State mandated to prepare the APO of the State for the various activities, submit it to the Steering Committee before end of December for each financial year, supervise the works being implemented out of funds released from the State CAMPA. It was also responsible for ensuring proper auditing of both receipt and expenditure of funds.

6.14 It is worth to mention that, the MoEF&CC introduced the Compensatory Afforestation Fund Bill 2008 in the Parliament. The Bill was passed in LokSabha but could not came up for voting in RajyaSabha and lapsed with the dissolution of LokSabha in May 2009.

6.15 Compensatory Afforestation Fund Act, 2016 was eventually enacted by the Parliament in the year 2016. This was followed by the notification of Compensatory Afforestation Fund Rules, 2018. The Acts and Rules have come into force w.e.f.30th September, 2018.

6.16 The Central Government vide letter dated 29th August, 2019 transferred the funds corresponding to the Maharashtra State as per the following details.

TABLE–5

Account Head Major Head 8336-Civil Deposits Minor head 102-National Compensatory Afforestation Deposits Sub Head-15-Maharashtra Detailed Head-	**Amount (Rupees)**
01-Compensatory Afforestation	1011,46,21,156
02-Catchment Area Treatment Plant	163,21,89,462
03-Integrated Wildlife Management Plan	34,12,20,845
04-Net Present Value of Forest Land	2002,31,69,525
05-Interest	441,66,67,157
06-Others	191,45,51,010
Total	**3844,24,19,155**

6.17 These funds have been deposited in the interest bearing non lapsable Public Accounts of the State. In addition the CAF Funds of Rs. 314.37 Cr. in expected to be transfer to State for year.

6.18 Development in the year 2019-20

As stated above, the funds transferred from the Central Government to the tune of Rs. 3844.24 Crore have been deposited in the Public Accounts of the State. The Annual Plan of Operation 2019-20 amounting to Rs. 499.38Crores was approved by the National Authority out of this Rs. 151.52 Crores received form State Government. Thus, due to procedural delays the physical and financial target has contemplated in APO 2019-20 have not been achieved.

6.19 Development in the year 2020-21

As stated above, the funds transferred from the Central Government to the tune of Rs. 3844.24 Crore have been deposited in the Public Accounts of the State. The Annual Plan of Operation 2020-21 amounting to Rs. 599.32Crores was approved by the National Authority out of this Rs. 260.00 Crores received form State Government.Thus, due to procedural delays the physical and financial target has contemplated in APO 2020-21 have not been achieved.

6.20 Development in the year 2021-22

As stated above, the funds transferred from the Central Government to the tune of Rs. 3844.24 Crore have been deposited in the Public Accounts of the State. The Annual Plan of Operation 2021-22 amounting to Rs. 688.27 Crores was approved by the National Authority out of this Rs. 162.50 Crores received State Government till December-2021. Rs. 325.50 Crores was received form State Government in January-2022 Total of Rs. 487.50 Crores received State Government till March-2022. Thus, due to procedural delays the physical and financial target has contemplated in APO 2021-22 have not been achieved.

7. The Maha CAMPA staff and infrastructure:

The Maha CAMPA office functions with its headquarters at Nagpur. The office is headed by an Additional Principal Chief Conservator of Forests and CEO appointed for the purpose. Government of Maharashtra has constituted a Governing Body with Hon. Chief Minister as the Chairperson, Steering Committee headed by the Chief Secretary and an Executive Committee headed by the Principal Chief Conservator of Forests (HoFF) to carry out the functions assigned as per CAF Act, 2016 and CAF Rules, 2018 for planning, overseeing and guiding the implementation of programmes taken up under CAMPA funds. The "Van Bhavan" office premises of the PCCF (HoFF), Maharashtra houses the MahaCAMPA office. The APCCF& CEO (MahaCAMPA) is assisted by one Divisional Forest Officer, one Assistant Conservator of Forests (Planning), one Chief Accountant, one Accountant and one Clerk provided from the Forest Department. A proposal for appointment of a Jt. CEO, a Dy. CEO, a ACF and a Financial Advisor has been submitted to Government as mandated in the CAF Act, 2016. National Authority has made it mandatory to Upload Photos of all CAMPA works on e-Green Watch Portal and advised to established FSI Cell in the State HQ vide letter Dt. 04.02.2021. Hence, services of a DFO Retd. and 2 Operators they were having expertise in handling GIS and other related software have been requisioned for this work.

B. Compensatory afforestation, other forestry and related schemes (physical and financial) including catchment area treatment, wildlife management and community development works and activities carried out therein in the State in last five years from the State Fund.

TABLE–6: Compensatory Afforestation carried out during last 5 years &Expenditure incurred

(Area in Ha. / Amount in Rs. Lakhs)

Sr. No.	APO Year	CA (01)							CAT Plan (02)	IWM Plan (03)	Other (C.W.) (06)	Grand Total CA (9+10+ 11+12)
		PPO		FYO		Maintenance		Total CA (4+6+8)				
		Area (ha.)	Amount	Area (ha.)	Amount	Area (ha.)	Amount					
1	2	3	4	5	6	7	8	9	10	11	12	13
1	2016-17	1867.47	1668.06	832.51	580.04	1532.82	2074.88	**4322.98**	0.00	0.00	1116.18	**5439.16**
2	2017-18	933.03	884.29	1684.97	819.59	11449.45	1713.25	**3417.13**	0.00	0.00	627.38	**4044.51**
3	2018-19	1518.20	1013.59	1454.96	694.57	10381.92	1382.96	**3091.12**	0.00	0.00	592.90	**3684.02**
4	2019-20	2876.11	1868.02	2749.94	1575.93	9918.50	1141.33	**4585.28**	0.00	0.00	513.19	**5098.47**
5	2020-21	178.69	716.70	633.57	412.54	12363.33	2080.49	**3209.73**	116.73	3.59	206.29	**3536.34**
Total		**7373.50**	**6150.66**	**7355.95**	**4082.67**	**45646.02**	**8392.91**	**18626.24**	**116.73**	**3.59**	**3055.94**	**21802.50**

TABLE–7 :NPV during 2016-17 to 2018-19 and Expenditure incurred

(Amount in Rs. Lakhs)

Sr. No.	Item of work	Expenditure		
		2016-17	2017-18	2018-19
1	2	4	5	6
	Core Activities (not less than 70%)			
1	Plantation under NPV	568	1256	4122
2	Forest Protection	535	234	161
3	Wildlife Management	7530	9262	11575
4	Implementation of Working Plan Prescription	532	303	28
5	Management of Village Forest		485	302
6	Development of high-tech Nurseries	10	0	28
7	Evaluation	15	38	11
8	Construction and repairs of residential and official buildings for frontline staff	3887	2180	709

Sr. No.	Item of work	Expenditure		
		2016-17	2017-18	2018-19
1	2	4	5	6
	Applied and need based research (up to 5%)			
9	Forestry and Wildlife research	222	263	305
	ICT/Education/Capacity building and training (up to 10%)			
10	Information and Communication technology	571	391	185
11	Education and Training	553	512	399
	Items of works under remaining components (not more than 15%)			
12	Publicity	218	325	122
13	Administrative Expenses, Contingency, Remuneration charges for non-official members and Others	139	107	142
Grand Total		**14781**	**15356**	**18089**

TABLE–8 :NPV and Interest during 2019-20, 2020-21 and Expenditure incurred

Rule No.	Particulars of work	Expenditure (Rs. Lakhs)	
		2019-20	2020-21
1	2	3	4
	Net Present Value (NPV)		
5 (2)	**Works under Not less than 80 % component (Rule 5 (2))**		
5(2)(b)	Artificial Regeneration	5844.07	2759.36
5(2)(c)	Silvicultural operations in forests	0.00	4666.95
5(2)(d)	Protection of plantations and forests	12.24	205.00
5(2)(e)	Pest and disease control in forest	0.00	0.00
5(2)(f)	Forest fire prevention and control operations	162.80	84.70
5(2)(g)	Soil and moisture conservation works in the forest	25.00	289.70
5(2)(h)	Voluntary relocation of villages from Protected areas (including cost of land and other property of the field owners)	1837.26	6083.84
5(2)(i)	Improvement of wildlife habitat as provided in the approved wildlife management plan or working plan	0.00	30.00
5(2)(j)	Planting and rejuvenation of forest cover on non-forest land falling in wildlife corridors	0.00	0.00
5(2)(k)	Establishment, operation and maintenance of animal rescue centre and veterinary treatment facilities for wild animals	14.30	316.81
5(2)(l)	Supply of wood-saving cooking appliances and other forest produce saving devices in forest fringe villages as specified by the National Authority from time to time	0.00	0.00
5(2)(m)	Management of biological diversity and biological resource	230.24	173.04
Grand Total for Activities under not less than 80% component		**8125.91**	**19015.41**

Rule No.	Particulars of work	Expenditure (Rs. Lakhs)	
		2019-20	2020-21
1	2	3	4
5 (3)	**Works under not more than 20 % component (Rule 5 (3))**		
5(3)(a)	Establishment, up-gradation and maintenance of modern nurseries and other planting stock production facilities for production of quality planting materials	0.00	0.00
5(3)(b)	Promoting conservation, sustainable use and documentation of biological diversity including preservation of habitats, conservation of land and folk varieties and cultivars, domesticated stocks and breeds of animals and microorganisms and chronicling of knowledge relating to biological diversity	164.71	84.85
5(3)(c)	Purchase and maintenance of equipment or devices used for communication and information technology for the purpose of protection of forest and wildlife	280.19	243.87
5(3)(d)	Construction, up-gradation and maintenance of inspection paths, forest roads in forest area, fire lines, watch towers, check posts and timber depots	0.00	30.00
5(3)(e)	Construction of residential and official buildings in forests for front line staffs deployed for protection of forest and wildlife	368.74	1161.33
5(3)(f)	Casual engagement of local people or labours to assist regular staff of State Forest Department for works for protection of forest and wildlife undertaken from State Fund	22.60	0.00
5(3)(g)	Survey and mapping of forest areas for forest fire control, compensatory afforestation works, soil and moisture conservation, catchment area treatment and wildlife management for preparing annual plans to be executed from the State Fund	0.00	0.00
5(3)(h)	Independent concurrent monitoring and evaluation and third party monitoring of various works undertaken from State Fund	12.93	0.00
5(3)(i)	Publicity-cum-awareness programme and exhibition on the various schemes being implemented by the State Authority from State Fund	6.21	1.00
5(3)(j)	Production and distribution of quality planting material through certified nurseries at subsidized price for promotion of trees outside forests on Government lands promoted by State Government	0.00	0.00
5(3)(k)	forest certification and development of certification standards	0.00	0.00
	Total for works under not more than 20% component	**855.38**	**1521.05**
Grand Total for NPV		**8981.29**	**20536.46**

Rule No.	Particulars of work	Expenditure (Rs. Lakhs)	
		2019-20	2020-21
1	2	3	4
	Utilisation of interest accrued on deposits in State Fund		
6 (a)	**Not less than sixty percent**		
i	to offset the incremental cost of compensatory afforestation and penal compensatory afforestation at the increased wage rates	**0.00**	**0.00**
ii	to offset the incremental cost of catchment area treatment plan at the increased wage rates	**0.00**	**0.00**
iii	to offset the incremental cost of wildlife management plan at the increased wage rates	**0.00**	**20.03**
iv	for disbursement of salary and allowances of members and staffs, both regular and contractual, of the State Authority	**151.40**	**76.16**
v	for disbursement of sitting fees and allowances to nominated members of the State Authority	**0.00**	**0.00**
vi	Provision for 5(2)(b) [Providing TCM to plantation taken in 2018-19 (Ha)]	**842.51**	**0.00**
vii	Provision for 5(2)(h) [Voluntary relocation of villages from Protected areas (including cost of land and other property of the field owners)]	**1700.00**	**0.00**
viii	**Road side plantation by Social Forestry**	1185.62	526.78
	Total for 6 (a)	**3879.53**	**622.97**
6 (b)	**Not more than forty present**		
i	Management of office establishment	**0.00**	**36.96**
ii	Office equipment including computers and peripherals and its maintenance for the State Authority	**8.78**	**0.00**
iii	Hiring of staff cars for the use of the officers and officials of the State Authority	**0.00**	**0.00**
iv	Hiring of buildings on lease for the office establishment and residences of the officers of State Authority	**0.00**	**0.00**
v	Other activities for management of the forests and wildlife not referred to in sub-rules (2) and (3) with the prior approval of the steering committee of the State Authority and included in the annual plan of operation.	**0.00**	**0.00**
	Total for 6 (b)	**8.78**	**36.96**
Total of Interest Component		**3888.31**	**659.93**
Grand Total (NPV + Interest)		**12869.59**	**21196.39**

TABLE–9: Abstract of Expenditure during last 5 years.

(Amount in Rs. Lakhs)

Sr. No.	Item	Year wise Expenditure				
		2016-17	2017-18	2018-19	2019-20	2020-21
1	CA	5439	4045	3685	5098	3210
2	CAT Plan	0	0	0	0	117
3	IWM Plan	0	0	0	0	4
4	NPV	14781	15356	18089	8981	20536
5	Interest	0	0	0	3888	660
6	Other (C.W.)	0	0	0	0	206
Total		**20220**	**19401**	**21774**	**17967**	**24733**

C. Forestry and other related schemes (physical and financial) and activities carried out therein in the state in previous years from the fund received under other schemes of the Government

TABLE–10: Information regarding various Forestry schemes under Forest Department

Sr. No.	Scheme	Expenditure (Amount in Lakhs)					Total
		2016-17	2017-18	2018-19	2019-20	2020-21	
1	Plan Scheme (State)	66726	111936	209761	134513	74026	**596962**
2	Plan Scheme (CSS)	8953	7863	15352	10680	6934	**49782**
3	Non Plan	22465	11373	11425	37523	49403	**132189**
4	Non Plan (Salary)	38754	25531	12083	141460	124272	**342100**
Total		**136897**	**156703**	**248621**	**324176**	**254636**	**1121033**

Source: PCCF (BPD)

Details of Forestry and Other related schemes and activities carried out in the State for the past 5 years in mentioned in the Annexure I (A) and I (B).

D. Year wise total forest area diverted in the various districts/forest divisions of the State since 1980

TABLE–11: Information on forest area diverted in the State

Sr. No.	Year	Area in ha.
1	1980-1981	41.00
2	1981-1982	151.00
3	1982-1983	122.00
4	1983-1984	174.00
5	1984-1985	556.00
6	1985-1986	357.00
7	1986-1987	341.00
8	1987-1988	6654.00
9	1988-1989	839.00
10	1989-1990	3036.00
11	1990-1991	2877.00
12	1991-1992	541.00
13	1992-1993	954.00

Sr. No.	Year	Area in ha.
14	1993-1994	4695.00
15	1994-1995	2558.00
16	1995-1996	4591.00
17	1996-1997	565.00
18	1997-1998	1165.00
19	1998-1999	551.00
20	1999-2000	493.00
21	2000-2001	987.00
22	2001-2002	3400.00
23	2002-2003	7753.00
24	2003-2004	776.00
25	2004-2005	756.00
26	2005-2006	1133.00
27	2006-2007	2176.00
28	2007-2008	243.00
29	2008-2009	1842.00
30	2009-2010	88.00
31	2010-2011	1960.00
32	2011-2012	352.00
33	2012-2013	1141.00
34	2013-2014	1427.00
35	2014-2015	1224.00
36	2015-2016	1251.00
37	2016-2017	1736.00
38	2017-2018	1597.00
39	2018-2019	805.00
40	2019-2020	236.21
41	2020-2021	1519.76
	Total	**63663.96**

Source: Summary of Forest Department

The Circle wise and year wise details of Diverted Forest Land are provided in Annexure-II

E. Year wise total Compensatory Afforestation carried out in the State since 1980

TABLE–12: Information regarding CA carried out since 1980

Year	Compensatory Afforestation (ha)
1980-2006	76566.469
2006-2007	1500.140
2007-2008	2090.533
2008-2009	2110.237
2009 - 2010	910.990
2010 - 2011	691.658
2011 - 2012	3578.239
2012 - 2013	4783.523
2013 - 2014	760.018
2014 - 2015	1325.143
2015 - 2016	773.642
2016 - 2017	832.510
2017 - 2018	1684.968
2018 - 2019	1043.030
2019 - 2020	1454.960
2020 - 2021	633.570
Total	**100739.63**

F. Brief description and abstract of the monitoring work done by the Monitoring and Evaluation Wing of the State Forest Department.

Due priority is being given to Evaluation and Monitoring of various schemes implemented under Maha CAMPA. Evaluation / studies are done to bring out actionable points that would, through due incorporation, lead to better quality of outputs.

Three years old plantations are evaluated by the Evaluation wing of the Forest Department in the years 2021-22. As per Evaluation Report out of 166 sites having area of 3673.53 ha. were evaluated. Out of which under CAMPA Scheme 4 sites having area of 87.54 ha. were evaluated and the details are given below:

TABLE–13: Results of Tenth year evaluations carried out in 2018-19

Circle	Evaluated Sites	Evaluated area	Successful	Partially successful	Failed
Nagpur	1	14.00	0	0	1
Gadchiroli	2	51.00	2	0	0
Dhule	1	22.54	0	1	0
Total	**4**	**87.54**	**2**	**1**	**1**

G. Brief description and abstract of the monitoring work done by the independent monitor (Third Party Monitoring) in the State

As mention in Part-IV (C)

H. Any other important information for consideration relevant for preparing APO.

As per Rules under the CAF Act 2016 and communication received from AG time to time, the CAMPA shall have Corporate Account based on Double Entry System. Section 27 of CAF Act mandates the auditing of the accounts of the State Authority by the Comptroller Auditor General. Prior to enactment of CAF Act 2016, the MoEF & CC vide Notification dated13.03.2007 also directed for Corporate accounting based on Double Accounting System. However, traditionally the Accounting in Forest Department has been cash Based instead of Double Accounting System. This special drive has been taken for conversion of books of Accounts from Single Account System to Double Accounting System throughout the State for the period of 2010-11 to 2020-21. For this purpose the professional Services of CAG empanelled Chartered Accountant have been availed through competitive bidding. The task has been completed and Chartered Accountant has submitted their report on dated 31.03.2022.

Further in order to consolidate the gains from reconciliation exercise it was proposed to grant extension to M/s A.S. Kulkarni & Associates, Chartered Accountant upto 31st March 2023 for carrying out further following activities.

1. Reconciliation of CAMPA Fund for the year 2021-22.
2. Audit of State Authority Fund for the year 2019-20 and 2020-21.
3. Carry out Internal Audit of different Implementing Agencies.
4. To help Official Staff for GST, Income Tax and Other Financial related matters.

Part – II

2. Part-II: Activities to be undertaken for compensatory afforestation, additional compensatory afforestation, penal compensatory afforestation, catchment area treatment plan and for any other site specific scheme may be used as per site-specific schemes submitted by the State along with the approved proposals for diversion of forest land under the Forest (Conservation) Act, 1980 (69 of 1980) referred to in clause (a) of section 6 of the Act:

A. District/Forest Division wise details of new compensatory afforestation, catchment area treatment plan works, wildlife management activities to be done as per the conditions imposed under forest clearance granted by the Central Government under the Forest (Conservation) Act,1980.

TABLE–14: CA, Cat Plan, IWMP and Other works to be taken in 2022-23

(Amount in Lakhs)

Sr. No	Implementing Agency	CA	CAT Plan	IWMP	Other	Financial Total
1	**2**	**4**	**5**	**6**	**7**	**8**
1	Amravati	75.17	-	-	-	**75.17**
2	Aurangabad	2554.37	-	-	0.52	**2554.89**
3	Chandrapur	474.02	-	-	24.33	**498.35**
4	Dhule	1050.20	243.83	-	107.36	**1401.39**
5	Gadchiroli	217.14	-	-	24.55	**241.69**
6	Kolhapur	162.53	-	-	-	**162.53**
7	Nagpur	705.16	319.33	-	490.40	**1614.90**
8	Nashik	173.35	-	-	1.41	**174.76**
9	Pune	35.86	-	-	-	**35.86**
10	Thane	285.86	881.25	-	175.57	**1342.68**
11	Yavatmal	304.53	3.05	-	3.63	**311.21**
12	WL Nagpur	-	-	-	164.72	**164.72**
13	WL Mumbai	1.25	-	100.00	-	**1.25**
14	Mangrove Cell	2.25	-	-	-	**2.25**
Total		**6041.70**	**1447.47**	**100.00**	**992.49**	**8581.66**

Forest Circle wise details of CA, Cat Plan, IWMP and Other works as stipulated in GOI approval letters are provided in Annexure-III, IV, V and VI respectively.

B. Implementation schedule of each activity proposed to be executed from State Fund to be provided district/division wise.

TABLE–15: Information regarding implementation schedule of each activity

Sr. No.	Particulars of work	Financial year 2022-23											
		Apr	May	Jun	Jul	Aug	Sep	Oct	Nov	Dec	Jan	Feb	Mar
1	2	3	4	5	6	7	8	9	10	11	12	13	14
1	Compensatory Afforestation												
a	PPO Works												
b	FYO Works												
c	SYO to 10 Y.O. Works												
2	CAT Plan												
3	IWMP												
4	Others												

Location and estimated cost of CA, Cat Plan, IWMP and Other works are provided in Annexure-III, IV, V and VI respectively.

C. Details of maintenance works in physical and financial terms proposed to be under taken in the current financial year in the case of compensatory afforestation work, catchment area treatment plan works, wildlife management activities and other such activities under taken in previous years which need maintenance for its survival and sustainability.

TABLE–16: Maintenance works of Compensatory Afforestation works, Catchment area Treatment Plan works and Wildlife management activities

(Area in ha. /Amount in Lakhs)

Sr. No	Implementing Agency	SYO to 10th Y.O.	
		Area	Amt.
1	2	3	4
1	Amravati	353.229	70.29
2	Aurangabad	455.309	100.21
3	Chandrapur	1307.198	256.92
4	Dhule	1116.040	233.78
5	Gadchiroli	1061.448	211.63
6	Kolhapur	343.530	50.13
7	Nagpur	1657.672	370.87
8	Nashik	887.160	163.27
9	Pune	197.423	32.79
10	Thane	1059.551	222.17
11	Yavatmal	988.840	304.53
12	WL Mumbai	6.550	1.25
13	Mangrove Cell	7.000	2.25
Total		**9440.949**	**2020.09**

Part – III

3. Part-III: Activities to be under taken from Net Present Value (NPV) and interest component referred in rule 5 and rule 6:

A. District/forest division wise details of activities to be done in the State on specified activities referred to in rule 5 and rule 6.

TABLE–17: Information regarding Implementing Agency wise Outlay for NPV and Interest Component

Sr. No.	Implementing Agency	NPV (04)	Interest (05)	Total
1	**2**	**3**	**4**	**5**
1	Amravati – T	6,130.50	-	6,130.50
2	Aurangabad – T	1,465.00	-	1,465.00
3	Chandrapur – T	1,210.00	-	1,210.00
4	Dhule – T	2,535.00	-	2,535.00
5	Gadchiroli – T	3,288.00	-	3,288.00
6	Kolhapur – T	1,738.50	-	1,738.50
7	Nagpur – T	4,542.00	-	4,542.00
8	Nashik – T	4,477.50	-	4,477.50
9	Pune – T	3,686.00	-	3,686.00
10	Thane – T	2,461.00	-	2,461.00
11	Yavatmal – T	3,733.00	-	3,733.00
Total for Territorial Wing (1 to 11)		**35,266.50**	**-**	**35,266.50**
12	PCCF (WL) M.S. Nagpur	16840.00	-	**16840.00**
13	APCCF (WL) East, Nagpur	2754.00	-	**2754.00**
14	APCCF (WL) West, Mumbai	1398.50	-	**1398.50**
15	CCF & FD, MTR, Amravati	4,100.00	-	4,100.00
Total for Wildlife Wing (12 to 15)		**25,092.50**	**-**	**25,092.50**
16	APCCF (ITP) M.S. Nagpur	950.00	-	**950.00**
17	APCCF, Mangrove Cell, Mumbai	40.00	-	**40.00**
18	APCCF (RET) Pune	2203.00	-	**2203.00**
19	CF, Evaluation	2.00	-	**2.00**
20	PIO, Nagpur	150.00	-	**150.00**
21	PCCF & CEO CAMPA	1,072.00	2,350.00	**3,422.00**
	Total	**64,776.00**	**2,350.00**	**67,126.00**

Activity wise details of NPV and Interest works are provided in Annexure-VII and Annexure-VIII respectively.

B. Location, estimated cost and implementation schedule of each activity proposed to be executed from State Fund to be provided district/division wise.

TABLE–18: Information regarding implementation schedule of Net Present Value.

Rule No.	Particulars of work	Financial year 2020-21											
		A	M	J	J	A	S	O	N	D	J	F	M
1	2	3	4	5	6	7	8	9	10	11	12	13	14
5 (2)	**Works under Not less than 80 % component (Rule 5 (2))**												
5(2)(b)	Artificial Regeneration												
5(2)(c)	Silvicultural operations in forests												
5(2)(d)	Protection of plantations and forests												
5(2)(e)	Pest and disease control in forest												
5(2)(f)	Forest fire prevention and control operations												
5(2)(g)	Soil and moisture conservation works in the forest												
5(2)(h)	Voluntary relocation of villages from Protected areas												
5(2)(i)	Improvement of wildlife habitat as provided in the approved wildlife management plan or working plan												
5(2)(j)	Planting and rejuvenation of forest cover on non-forest land falling in wildlife corridors												
5(2)(k)	Establishment, operation and maintenance of animal rescue centre and veterinary treatment facilities for wild animals												
5(2)(l)	Supply of wood-saving cooking appliances and other forest produce saving devices in forest fringe villages as specified by the National Authority from time to time												
5(2)(m)	Management of biological diversity and biological resource												
5 (3)	**Works under not more than 20 % component (Rule 5 (3))**												
5(3)(a)	Establishment, up-gradation and maintenance of modern nurseries and other planting stock production facilities for production of quality planting materials												
5(3)(b)	Promoting conservation, sustainable use and documentation of biological diversity including preservation of habitats, conservation of land and folk varieties and cultivars, domesticated stocks and breeds of animals and microorganisms and chronicling of knowledge relating to biological diversity												
5(3)(c)	Purchase and maintenance of equipment or devices used for communication and information technology for the purpose of protection of forest and wildlife												

Rule No.	Particulars of work	Financial year 2020-21											
		A	M	J	J	A	S	O	N	D	J	F	M
1	2	3	4	5	6	7	8	9	10	11	12	13	14
5(3)(d)	Construction, up-gradation and maintenance of inspection paths, forest roads in forest area, fire lines, watch towers, check posts and timber depots												
5(3)(e)	Construction of residential and official buildings in forests for front line staffs deployed for protection of forest and wildlife												
5(3)(f)	Casual engagement of local people or labours to assist regular staff of State Forest Department for works for protection of forest and wildlife undertaken from State Fund												
5(3)(g)	Survey and mapping of forest areas for forest fire control, compensatory afforestation works, soil and moisture conservation, catchment area treatment and wildlife management for preparing annual plans to be executed from the State Fund												
5(3)(h)	Independent concurrent monitoring and evaluation and third party monitoring of various works undertaken from State Fund												
5(3)(i)	Publicity-cum-awareness programme and exhibition on the various schemes being implemented by the State Authority from State Fund												
5(3)(j)	Production and distribution of quality planting material through certified nurseries at subsidized price for promotion of trees outside forests on Government lands promoted by State Government												
5(3)(k)	forest certification and development of certification standards												

TABLE–19: Information regarding implementation schedule of Interest Component.

Rule No.	Particulars of work	A	M	J	J	A	S	O	N	D	J	F	M
1	2	3	4	5	6	7	8	9	10	11	12	13	14
6	**Utilization of interest accrued on deposits in State Fund**												
6 (a)	**Not less than sixty percent**												
i	to offset the incremental cost of compensatory afforestation and penal compensatory afforestation at the increased wage rates												
ii	to offset the incremental cost of catchment area treatment plan at the increased wage rates												
iii	to offset the incremental cost of wildlife management plan at the increased wage rates												
iv	for disbursement of salary and allowances of members and staffs, both regular and contractual, of the State Authority												
v	for disbursement of sitting fees and allowances to nominated members of the State Authority												

Rule No.	Particulars of work	A	M	J	J	A	S	O	N	D	J	F	M
1	2	3	4	5	6	7	8	9	10	11	12	13	14
vi	Activities referred to in sub rules 2 and 3 of Rule 5.												
vii	Road side plantation by Social Forestry												
6 (b)	**Not more than forty percent**												
i	Management of office establishment												
ii	Office equipment including computers and peripherals and its maintenance for the State Authority												
iii	Hiring of staff cars for the use of the officers and officials of the State Authority												
iv	Hiring of buildings on lease for the office establishment and residences of the officers of State Authority												
v	Other activities for management of the forests and wildlife not referred to in sub-rules (2) and (3) with the prior approval of the steering committee of the State Authority and included in the annual plan of operation.												

C. Details of maintenance works in physical and financial terms, proposed to be undertaken in the current financial year in the case of activities under taken in the State on specified activities referred to in rule 5 and rule 6 under taken in previous years which needs maintenance for its survival and sustainability.

TABLE–20: Maintenance works under NPV and Interest component

Sr. No.	Particulars of works	Quantity (Area in ha.)	Amount (Rs. in Lakhs)
1	**2**	**3**	**4**
1	Artificial Regenerations (4th YO Works)	8531.930	1537.00
2	Fodder Development (SYO)	2703.000	1975.00
	Total	**11234.93**	**3512.00**

Part – IV

Part-IV: Measurable output of all physical activities and targets of each permissible activity along with the period required for achieving the measurable output:

A. Physical and financial targets of each activity to be undertaken in measurable quantity along with the estimated cost of such activities in tabular form including details provided in part II and part III.

TABLE–21: Information regarding Physical and Financial targets of each activity to be undertaken in measurable quantity along with the estimated cost

Sr. No.	Activity	Physical Target (in Ha)	Measurable Output (in Ha)	Financial Target (in Lakhs)	Time limit
1	Compensatory Afforestation				
a	PPO	1275.296	1275.296	3790.09	April-2022 to March-2023
b	FYO	246.405	246.405	231.52	
c	Maintenance of Plantations	9440.949	9440.949	2020.09	
2	CAT Plan	927.50	927.50	1447.47	
3	Conditional Works	507.746	507.746	278.52	
4	Assisted Natural Regeneration (PPO)	1321.00	1321.00	2232.00	
5	Assisted Natural Regeneration (FYO)	820.00	820.00	572.00	
	Artificial Regeneration (PPO)	75.00	75.00	82.50	
6	Artificial Regeneration (4th YO)	8531.93	8531.93	1537.00	
7	Fodder Development (PPO)	1666.360	1666.360	3543.00	
8	Fodder Development (FYO)	1874.000	1874.00	2023.00	
9	Fodder Development (SYO)	2703.000	2703.00	1975.00	
10	Soil and moisture conservation works in the forest	3240 Nos. 1253.00 Ha.	3240 Nos. 1253.00 Ha.	7814.50	
12	Civil Infrastructure (Construction of Type-I, II, III, and RFO Offices)	236 Nos.	236 Nos.	7062.00	
Total				**34608.69**	

B. Measurable output of all physical activities to be undertaken along with the period required for achieving the measurable output.

As mentioned in table 21

C. Details of the concurrent monitoring and evaluation report including third party monitoring under taken in past with photo graphs.

1. Third Party Evaluation by Seva Nivrutta Van Karmachari (SEVAK) Sangh, Pune (Annexure-IX)

The Maharashtra Forest Department signed a MoU with Seva Nivrutta Van Karmachari Sangh, Pune to conduct Third Party Evaluation of CAMPA Plantations taken across the State. The objective of the evaluation was to assess the status of the 47 CAMPA plantations and also to ascertain the reasons for its success or failure. The framework for this evaluation focused on three parameters namely-relevance (site & species suitability), effectiveness (survival, growth and area coverage) and sustainability (maintenance, protection and monitoring).

The SEVAK carried out evaluation of plantations on 46 sites. One site of 23 ha. in Dahanu forest division could not be evaluated because the local community strongly opposed treating the area for plantation raising. In the other 45 sites, the local community actively participated in creating plantation asset and it's protection.

Plantations on 45 sites are on Forest land. In one site of Alibag division plantation is done on non-forest land. Process of notifying the area as Forest is initiated by Forest Department.

Plantations of 45 sites were done in 2020 monsoon season and on one site in 2019 monsoon season.

Indigenous plant species are given priority in plantations. There is a balanced mixture of Timber, Fuel, Fruit, Gum, Medicinal Plant species in the plantations.

- Four plantation models are implemented by the agency.

A) Mangrove Planting-
- 4444 plants per ha.
- Area-7.000 ha.
- Sites- 7
- Survival %- 79.39

B) Mixed Planting-
- 2500 plants per ha.
- Area-6.350 ha.
- Sites-5
- Survival%- 85.89

C) Mixed Planting-
- 1111 plants per ha.
- Area-255.410 ha.
- Sites- 19
- Survival %-87.04

D) Mixed Planting-
- 625 plants per ha.
- Area-332.320 ha.
- Sites-15
- Survival %-89.35

- Average height of Mangrove Plants is 78.5 cms and Mixed species is 75.3 cms.

- Health of plants noticed by evaluators-
  - A) Healthy Plantation Sites-13
  - B) Semi-Healthy Plantation Sites-31
  - C) Un-Healthy Plantation Sites-02
- The plantations are graded taking into consideration survival percentage of plants, average height of plants, general health of plants, sustainability of plantation, carrying timely cultural operations, protection of plantations, maintenance of record, involvement of local community in plantation activities.
  - A) Excellent Sites -12
  - B) Very Good Sites - 17
  - C) Good Sites - 16
  - D) Poor Sites – 01
- There is a good scope for improvement in Supervision and Monitoring.
- Providing barbed wire fencing, chain link fencing and protective irrigation to some plantation sites has proved to be useful.
- The plantation programme has generated good employment to local villagers.
- The attempt to include Mangrove area under plantations is appreciable and has produced encouraging results.

Photographic evidence -	
Caption 1: Good growth of plants	
Caption2: Surveyof plantationsite	

2. Third Party Evaluation by Seva Nivrutta Van Karmachari Sahakari Sanstha Ltd, Nagpur (Annexure-X)

The Maharashtra Forest Department signed a MoU with Seva Nivrutta Van Karmachari Sahakari Sanstha Ltd., Nagpur to conduct Third Party Evaluation of CAMPA Plantations taken across the State. The objective of the evaluation was to assess the status of the 99 CAMPA plantations and also to ascertain the reasons for its success or failure. The framework for this evaluation focused on three parameters namely-relevance (site & species suitability), effectiveness (survival, growth and area coverage) and sustainability (maintenance, protection and monitoring).

The summary deals with 99 evaluated sites equivalent to about 20% treated area.

The area of 99 evaluated sites is 1745.563 ha., which is classified into Reserved Forest- 1311.643 ha. (74 sites), Protected Forest- 196.940 ha. (12 sites), Compensatory Land (Notified as RF) 94.660 ha. (5 sites) and Compensatory Land (Not Notified) 142.320 ha. (8 sites).

The distribution of plantations is as below -

FYO:	5 sites	82.040 ha.
TYO:	65 sites	1132.040 ha.
4th Year:	2 sites	20.000 ha.
5th Year:	12 sites	247.024 ha.
6th Year:	3 sites	35.000 ha.
7th Year:	12 sites	229.459 ha.
Total:	**99 sites**	**1745.563 ha.**

Following 5 Plantation Models are implemented by & large.

2500 Plants per ha.	400 Plants per ha
1600 Plants per ha.	625 Plants per ha.
1111 Plants per ha.	400+1100 Plants per ha.

71 Plant species were introduced in the plantations. On 83 sites (81%) species selected for planting were suitable. The utility of planted species is as below-

Timber	:	22%,	Medicinal Plants	:	28%,
Fuel	:	02%,	Multiple use	:	13%,
Fruit	:	21%,	Ornamental use	:	14%

Plant Survival

38	sites - More than 80%
40	sites - 60-80%
18	sites - 40-60%
3	sites - less than 40%

Average height of plants

FYO:	5 sites	0.85 Mts.
TYO:	65 sites	1.20 Mts.
4th Year:	2 sites	1.20 Mts.
5th Year:	12 sites	1.90 Mts.
6th Year:	3 sites	1.45 Mts.
7th Year:	12 sites	2.60 Mts.

Health of Plants

Healthy	61 sites	60.00%
Semi-Healthy	31 sites	30.00%
Un-Healthy	7 sites	10.00%
Total	99 sites	100.00%

Grading of Plantations

Average height of plants, general health of plants & survival percentage of plants together were taken into account in grading of plantations.

Excellent (A+)	36 sites
Very Good (A)	30 sites
Good (B+)	19 sites
Average (B)	10 sites
Poor (C)	4 sites
Total	**99 sites**

Observations and recommendations

After the field visit and careful scrutiny and critical analysis of the data for the further improvement in the implementation of plantation programme under CAMPA funds, the observations and recommendations are as below.

1. Selection of site of plantation should be done only by the officer not below the rank of ACF so that unsuitable sites are not selected for plantation.
2. Selection of species to be planted in a particular site should be decided and listed by the officer not below the rank of ACF so that only suitable species as per norms and guide lines will be planted in plantation area.
3. It should be made mandatory for the DyCF to make the frequent visits to nurseries to ensure raising of suitable species for particular sites selected and models of plantation adopted.
4. The estimates are to be prepared site specific and as per the requirement of site conditions and needs of local villagers.
5. In order to know the short fall or deficiency of nutrients in the soil necessary for the planted seedlings and to supplement it, soil testing should be done immediately after site selection. However it is found that in maximum site the same has not been done. Front line field staff is needed to be directed in this regard.
6. Natural regeneration noticed in some of the sites. It is suggested that instead of removing them singling operation should be done (Singling of rooted stock). It should be made the part of plantation (artificial regeneration) and all the operation which are to be carried out for planted seedling, should be carried out for the retained natural regeneration.

7. The seedlings minimum of 2 years of growth, having height not less than 2 meters i.e. above grazing level should only be planted and this should be made mandatory. For the supply of 2 years old plants of minimum height of 2 mts. independent estimates of nurseries should be prepared under CAMPA funds and should not be mixed with the estimates of plantations.
8. Refractory, zone I, and some sites of even zone-II, should be selected and closed by fencing at least for two years in advance. The broadcasting of different seeds of grasses, herbs and shrubs should be done, so that in these two year's period, the plantation soil will be enriched by nitrogen and humus and ready for plantation in 3rd year. The planting should be done by tall tree species seedlings at least of 2 meters height (above grazing level) in third year.
9. Casualty replacement should be done with equivalent average height seedlings of the plantations.
10. Provision for casualty replacement in 4th, 5th and 6th year of plantation year should be done and that is also by equivalent average height seedlings of the plantations.
11. Polygon area of plantation site should not be more than 20% of plantation area, so that effective protection could be possible.
12. Provision of watering to planted seedlings from Dec to June should be made mandatory in the estimates. This would reduce the casualty percentage in plantation area and to increase the growth, vigour and survival of the plants.
13. Provision of fertilizers, manure, insecticides and pesticide should be done in Estimate and should be used if necessary, with prior approval of the Dy.CF.
14. Photos of each plantation operation should be taken and should be pasted in plantation register. This also should be made mandatory.
15. Fencing should be done either by Barbed Wire or Chain Link instead of which less effective and needs major maintenance works in every two years.
16. If TCM is preferred, a provision should be made in the plantation estimate for repairs and maintenance of it, in every two years.
17. Wherever required the works of soil & Moisture conservation should in-Variably be done, because it induces the vigorous growth and also reduces the casualties.
18. Weeding should be done with intensive soil multching and manuring around the planted seedlings to boost up the growth and vigour of the planted seedlings.
19. Grid and base line should be maintained throughout the plantation period. All weeds and thorny shrub of no use along with grasses should be removed and kept clean throughout the plantation period. Fixing of stone mentioning number of grids etc. should be maintened throughout the plantation period. Special budget provision in estimate should be done for the same.

Photographic evidence -	
Caption 1: Good growth of plants	
Caption2: Surveyof plantationsite	

Annexure – I – A & B

Annexure - I - A

Forestry and other activities carried out in the state in last five years from the fund received under other schemes (Plan)

Sr. No.	Name of the scheme		Financial Achivements (Amount in Rs. Lakhs)					Total
		CRC Code	2016-17	2017-18	2018-19	2019-20	2020-21	
1	Reorganization of Forest Department.	24060229	0.00	0.00	0.00	0.00	0.00	0.00
2	Exploitation by Govt Agency (Aapta)	24060461	0.00	1.76	0.87	0.58	0.00	3.21
3	Exploitation by Govt Agency (Fire Wood and Charcoal)	24060481	0.00	669.81	674.22	364.27	94.58	1802.88
4	Exploitation by Govt Agency (Gross & other minor produce)	24060514	0.00	49.71	24.86	60.00	41.39	175.96
5	Agencies charges payble to the Forest Development co-operation of Maharashtra Ltd.	24060668	0.00	200.00	200.00	0.00	0.00	400.00
6	Payment of Aadivasi Khatedar under the Maharashtra Sales of Trees Act 1969 Treble	24060686	0.00	257.29	293.36	255.16	188.52	994.33
7	Wildlife & Nature Conservation	24060775	25.20	924.60	1077.60	918.28	0.00	2945.68
8	Joint forests Management Scheme	24061521	5017.37	5508.12	7916.67	1818.96	1592.01	21853.13
9	Provision of arms to forest staff	24062114	1.60	0.00	0.00	0.00	0.00	1.60
10	Strengthening of Existing Wireless Network & Maintenance	24062123	104.00	0.00	0.00	0.00	0.00	104.00

Sr. No.	Name of the scheme		Financial Achivements (Amount in Rs. Lakhs)					Total
		CRC Code	2016-17	2017-18	2018-19	2019-20	2020-21	
11	Strengthening of 219 permanent Check Nakas & As per Action Plan additional staff	24062141	84.00	0.00	0.00	0.00	0.00	84.00
12	Strengthening of Mobile Squads.	24062161	794.00	208.00	163.85	99.38	0.00	1265.23
13	Providing SRP unit	24062179	0.00	0.00	0.00	0.00	0.00	0.00
14	Construction of 16 Forest Stations	24062188	114.40	0.00	0.00	0.00	0.00	114.40
15	Wild Life related Construction Works in Protected Area	24062221	855.00	0.00	0.00	0.00	0.00	855.00
16	Establishment of wild animals infirmaries	24062232	363.40	184.00	479.10	189.17	300.00	1515.67
17	Settlement of Rights & Privileges-Rehabilitation of Villages in National Park & Sanctuaries	24062241	5680.00	7866.40	1984.00	1050.00	3262.50	19842.90
18	Development of Forest Tourism	24062286	0.00	0.00	0.00	0.00	0.00	0.00
19	Eco-Tourism	24062295	4650.78	7280.26	7393.52	2559.63	2185.84	24070.03
20	Management of Bio diversity around the Water bodies in the state	24062295	83.10	68.80	55.97	15.23	0.00	223.10
21	Pandit Dindayal Upadhaya , Van Udyan with BalVidnyan Bhavan For Conservation of Biodiversity on Forest and Nonforest Land and Nature Protection	24062295	2975.74	2080.00	1702.82	469.45	400.00	7628.01

Sr. No.	Name of the scheme		Financial Achivements (Amount in Rs. Lakhs)					Total
		CRC Code	2016-17	2017-18	2018-19	2019-20	2020-21	
22	Establishment of Botanical Garden on Chandrapur-Ballarpur Road District Chandrapur	24062295	199.97	2804.00	5980.00	2090.30	0.00	11074.27
23	Modern forest fire control project (I.F.P.C.)	24062375	248.38	213.79	534.09	206.60	198.54	1401.40
24	Wild life nature conservation including state share of tiger project	24062384	306.80	537.59	593.85	339.81	110.38	1888.43
25	Supply of Cooking Gas and Solar cooker to schedule Tribes beneficiaries	24068186	0.00	0.00	0.00	0.00	0.00	0.00
26	Supply of Cooking Gas and Solar cooker to schedule caste beneficiaries	24068195	3315.78	3199.99	2000.00	1092.43	0.00	9608.20
27	Establishment of Zoo at Goregaon	24068201	80.00	80.00	80.00	60.00	0.00	300.00
28	Raising of Nursery by Tribal Beneficiaries	24068212	0.00		0.00	0.00	0.00	0.00
29	Van Mahostsav	24068551	0.00	4729.99	10201.05	3867.89	1576.68	20375.61
30	Advertisement, Publicity & Training	24068589	1208.00	4000.00	4398.88	2662.69	70.00	12339.57
31	Plantation on Public non forest community lands in identified watersheds & other areas	24068598	677.65	0.00	0.00	0.00	0.00	677.65
32	Protection of Coastal Areas by Afforestation	24068604	30.00	26.40	26.40	17.28	0.00	100.08

Sr. No.	Name of the scheme		Financial Achivements (Amount in Rs. Lakhs)					Total
		CRC Code	2016-17	2017-18	2018-19	2019-20	2020-21	
33	Dr. Babasaheb Ambedkar Strengthening & Modernization of Govt. Nurseries	24068613	2391.43	3336.00	10080.00	2113.04	757.22	18677.69
34	Establishment of High Tech Nurseries	24068613						
35	Monitoring, Evaluation and computerization	24068622	0.00	8.00	16.00	0.00	0.00	24.00
36	Raising of Nursery by Tribal Beneficiaries	24068642	0.00	0.00	0.00	0.00	0.00	0.00
37	Forest Tourism In Tribal Areas	24068651	162.99	176.00	107.37	0.00	0.00	446.36
38	Computerization of Forest Department	24068669	173.00	800.00	986.74	478.72	400.28	2838.74
39	Establishment of Bio-Diversity Board / Conservation of Mangrove	24068696	134.16	729.08	889.08	525.00	150.00	2427.32
40	Dr. Shyamaprasa Mukharjee Jan-Van Vikas yojna	24068711	4250.00	8800.00	8800.00	2962.31	3745.26	28557.57
41	National Bamboo Mission 40% State Share	2406A004	11.45	0.00	643.20	284.73	210.13	1149.51
42	National Afforestation Programme (40% State Share) (General)	2406A013	364.53	377.00	835.02	0.00	115.62	1692.17
43	National Afforestation Programme (40% State Share) (SCSP)	2406A022	48.49	103.60	185.66	0.00	0.00	337.75
44	Maharashtra State Zoo Authority	2406A087	0.00	102.04	62.10	161.15	66.74	392.03

Sr. No.	Name of the scheme		Financial Achivements (Amount in Rs. Lakhs)					Total
		CRC Code	2016-17	2017-18	2018-19	2019-20	2020-21	
45	Maharashtra State Eco-Tourism Development Board	2406A096	0.00	153.55	131.40	37.28	21.70	343.93
46	Tiger Project 40% State Share	2406A102	2270.71	3542.51	5565.42	2121.97	914.56	14415.17
47	Elephant Project 40% State Share	2406A111	9.78	16.92	28.82	18.72	14.20	88.44
48	Tiger Project 50% State Share	2406A131	1023.30	1227.99	1589.47	1422.41	1059.95	6323.12
49	Green Indian Mission (40% State Share)	2406A158	0.00	0.00	687.00	0.00	0.00	687.00
50	Integrated Wildlife Habited development (50% State Share)	2406A176	0.00	0.00	40.00	79.23	0.00	119.23
51	Establishment of Maharashtra Bamboo Development Board	2406A185	0.88	200.44	2741.35	276.24	266.21	3485.12
52	Student Harit sena	2406-A194	0.00	175.48	176.00	132.00	0.00	483.48
53	Eco-Taskforce	2406-A211	0.00	1120.00	1280.00	959.97	350.00	3709.97
54	Nagar Van Udyan	2406-A202	0.00	89.00	44.20	0.00	0.00	133.20
55	National Bamboo Mission 40% State Share	2406-A603	0.00	0.00	0.00	104.73	0.00	104.73
56	Establishment of Forest Training Centre in Forest Department.	44150172 / 24151068	403.16	403.70	1336.79	379.32	277.84	2800.81
57	Plantation Academy at Chandrapur	44150181 / 24151077	2984.66	13246.90	9309.14	1846.84	410.51	27798.05
58	Forest Building	44060026	3400.00	2280.00	3300.00	1315.01	750.00	11045.01

Sr. No.	Name of the scheme		Financial Achivements (Amount in Rs. Lakhs)					Total
		CRC Code	2016-17	2017-18	2018-19	2019-20	2020-21	
59	Afforestation for soil conservation	44060044	2504.00	0.00	0.00	0.00	0.00	2504.00
60	Survey & Demarcation of Acquired private Forests	44060053	1500.00	850.61	999.89	342.04	0.00	3692.54
61	Survey & Demarcation	44060071	20.00	0.00	0.00	0.00	0.00	20.00
62	Schemes for Finance from the receipt of Forest Development Tax	44060171	0.00	508.62	378.54	196.68	90.00	1173.84
63	Investment in Public Sector undertaking share capital	44060198	25.00	0.00	0.00	0.00	0.00	25.00
64	Massive Afforestation Program	44060492	8899.99	16713.55	60159.68	38236.06	28800.83	152810.11
65	Roadside/Canal side/Rail side Plantation	44060492	2780.00	10232.67	46189.94	58068.47	24791.36	142062.44
66	GREENING OF DEGRADED HILLS	44060492	383.37	400.00	609.99	304.36	374.99	2072.71
67	Construction of Vantale	44060797	2250.00	1536.95	1100.00	155.38	240.00	5282.33
68	Construction of Wall Compound in Sanjay Gandhi National Park, Boriwali	44063849	20.00	80.00	200.00	240.00	0.00	540.00
69	Construction of Protection Wall SGNP	24062203 / 44063849	80.00	0.00	0.00	0.00	0.00	80.00
70	Preliminary Works Zoo at Gorewada	24062259 / 44063858	3200.00	2000.00	2000.00	1199.99	0.00	8399.99
71	Industrial and Commercial use (Bamboo Plantation)	44060287 / 44063769	0.00	0.00	0.00	0.00	0.00	0.00

Sr. No.	Name of the scheme		Financial Achivements (Amount in Rs. Lakhs)					Total
		CRC Code	2016-17	2017-18	2018-19	2019-20	2020-21	
72	Forest Research	44150011	70.00	64.40	75.00	30.00	30.76	270.16
73	Extension & publicity	44150145	0.00	0.00	0.00	0.00	0.00	0.00
74	Training to forest staff	44150154	99.99	120.00	1666.15	142.62	48.13	2076.89
75	Chichpalli Bamboo Center	44150192	449.70	1650.66	2129.93	2243.70	119.37	6593.36
	Grand Total		**66725.76**	**111936.18**	**210124.99**	**134515.08**	**74026.10**	**597328.11**

Annexure - I - B

Forestry and other activities carried out in the state in last five years from the fund received under other schemes (Non Plan)

Sr. No.	Name of the scheme	Financial Achivements (Amount in Rs. Lakhs)					Total
		2016-17	2017-18	2018-19	2019-20	2020-21	
1	Survey Settlement and forest demarcation of forests	1857.95	1021.86	1488.56	1246.21	1502.37	**7116.95**
2	Natural Regeneration	2429.75	472.30	495.87	344.24	543.27	**4285.43**
3	Artificial Regeneration	8878.85	3621.51	3767.09	7214.31	8066.22	**31547.98**
4	Fire and Forest Protection	3500.20	1565.25	5200.79	6351.80	6008.51	**22626.55**
5	Exploitation by Government agency (Timber)	3446.06	3736.03	6461.54	7702.49	6195.93	**27542.05**
6	Exploitation by Government agency fire wood	569.66	0.00	0.00	0.00	0.00	**569.66**
7	Exploitation by Government agency (Bamboos)	849.60	626.87	676.09	535.79	729.27	**3417.62**
8	Marking of Coupes	932.47	329.04	345.31	288.84	376.92	**2272.58**
	Total	**22464.54**	**11372.86**	**18435.25**	**23683.68**	**23422.49**	**99378.82**

Annexure – II

Annexure - II

Information regarding circle wise and year wise details of Forest Land diverted

(Area in ha.)

Sr. No.	Year	Amravati	Aurangabad	Chandrapur	Dhule	Gadchiroli	Kolhapur	Nashik	Nagpur	Pune	Thane	Yavatmal	(WL) West Mumbai	Mangrove, Mumbai	Total
1	1980-1981	0.00	1.00	0.00	3.00	0.00	0.00	1.00	36.00	0.00	0.00	0.00	0.00	0.00	**41.00**
2	1981-1982	0.00	0.00	10.00	0.00	0.00	0.00	0.00	0.00	0.00	141.00	0.00	0.00	0.00	**151.00**
3	1982-1983	0.00	0.00	94.00	0.00	0.00	0.00	0.00	2.00	0.00	26.00	0.00	0.00	0.00	**122.00**
4	1983-1984	0.00	14.00	3.00	16.00	0.00	40.00	0.00	58.00	7.00	36.00	0.00	0.00	0.00	**174.00**
5	1984-1985	0.00	17.00	0.00	0.00	0.00	12.00	35.00	53.00	14.00	425.00	0.00	0.00	0.00	**556.00**
6	1985-1986	0.00	0.00	264.00	30.00	0.00	0.00	63.00	0.00	0.00	0.00	0.00	0.00	0.00	**357.00**
7	1986-1987	0.00	4.00	0.00	0.00	42.00	0.00	10.00	93.00	2.00	128.00	62.00	0.00	0.00	**341.00**
8	1987-1988	5.00	0.00	104.00	6499.00	0.00	3.00	29.00	0.00	4.00	10.00	0.00	0.00	0.00	**6654.00**
9	1988-1989	294.00	9.00	4.00	38.00	0.00	12.00	48.00	175.00	95.00	39.00	125.00	0.00	0.00	**839.00**
10	1989-1990	264.00	9.00	173.00	31.00	0.00	2.00	22.00	2448.00	84.00	1.00	2.00	0.00	0.00	**3036.00**
11	1990-1991	50.00	42.00	0.00	2737.00	0.00	1.00	2.00	0.00	3.00	42.00	0.00	0.00	0.00	**2877.00**
12	1991-1992	517.00	2.00	1.00	2.00	0.00	2.00	1.00	3.00	0.00	12.00	1.00	0.00	0.00	**541.00**
13	1992-1993	59.00	1.00	40.00	325.00	0.00	42.00	408.00	0.00	6.00	51.00	21.00	1.00	0.00	**954.00**
14	1993-1994	1358.00	1.00	0.00	2158.00	0.00	501.00	82.00	162.00	2.00	7.00	424.00	0.00	0.00	**4695.00**
15	1994-1995	258.00	143.00	1.00	287.00	4.00	1218.00	133.00	96.00	354.00	54.00	10.00	0.00	0.00	**2558.00**

Sr. No.	Year	Amravati	Aurangabad	Chandrapur	Dhule	Gadchiroli	Kolhapur	Nashik	Nagpur	Pune	Thane	Yavatmal	(WL) West Mumbai	Mangrove, Mumbai	Total
16	1995-1996	0.00	1.00	499.00	162.00	142.00	64.00	61.00	839.00	27.00	2709.00	87.00	0.00	0.00	**4591.00**
17	1996-1997	0.00	0.00	5.00	169.00	6.00	2.00	22.00	199.00	1.00	161.00	0.00	0.00	0.00	**565.00**
18	1997-1998	20.00	0.00	9.00	368.00	0.00	33.00	85.00	188.00	71.00	357.00	34.00	0.00	0.00	**1165.00**
19	1998-1999	53.00	0.00	37.00	16.00	3.00	9.00	28.00	260.00	55.00	13.00	77.00	0.00	0.00	**551.00**
20	1999-2000	135.00	8.00	1.00	103.00	0.00	18.00	2.00	198.00	10.00	18.00	0.00	0.00	0.00	**493.00**
21	2000-2001	94.00	0.00	5.00	47.00	1.00	51.00	53.00	370.00	50.00	256.00	60.00	0.00	0.00	**987.00**
22	2001-2002	0.00	1.00	1968.00	756.00	111.00	182.00	156.00	115.00	0.00	47.00	63.00	1.00	0.00	**3400.00**
23	2002-2003	20.00	0.00	173.00	6479.00	1.00	419.00	384.00	270.00	0.00	6.00	1.00	0.00	0.00	**7753.00**
24	2003-2004	364.00	2.00	250.00	0.00	3.00	1.00	2.00	26.00	55.00	44.00	29.00	0.00	0.00	**776.00**
25	2004-2005	5.00	0.00	29.00	117.00	148.00	122.00	74.00	15.00	0.00	246.00	0.00	0.00	0.00	**756.00**
26	2005-2006	0.00	58.00	150.00	215.00	0.00	21.00	20.00	113.00	18.00	523.00	10.00	5.00	0.00	**1133.00**
27	2006-2007	2.00	5.00	599.00	297.00	3.00	1.00	113.00	58.00	1.00	1096.00	1.00	0.00	0.00	**2176.00**
28	2007-2008	13.00	0.00	2.00	42.00	14.00	64.00	15.00	25.00	2.00	46.00	20.00	0.00	0.00	**243.00**
29	2008-2009	6.00	41.00	12.00	241.00	603.00	59.00	28.00	754.00	75.00	23.00	0.00	0.00	0.00	**1842.00**
30	2009-2010	14.00	4.00	7.00	63.00	0.00	0.00	0.00	0.00	0.00	0.00	0.00	0.00	0.00	**88.00**
31	2010-2011	227.00	9.00	294.00	295.00	1.00	118.00	15.00	829.00	48.00	108.00	16.00	0.00	0.00	**1960.00**
32	2011-2012	0.00	8.00	18.00	5.00	11.00	106.00	0.00	92.00	2.00	33.00	77.00	0.00	0.00	**352.00**

Sr. No.	Year	Amravati	Aurangabad	Chandrapur	Dhule	Gadchiroli	Kolhapur	Nashik	Nagpur	Pune	Thane	Yavatmal	(WL) West Mumbai	Mangrove, Mumbai	Total
33	2012-2013	0.00	0.00	0.00	468.00	8.00	161.00	46.00	230.00	5.00	137.00	5.00	81.00	0.00	**1141.00**
34	2013-2014	5.00	4.00	1.00	16.00	0.00	146.00	0.00	168.00	2.00	75.00	1010.00	0.00	0.00	**1427.00**
35	2014-2015	50.00	12.00	0.00	0.00	272.00	67.00	3.00	75.00	31.00	708.00	6.00	0.00	0.00	**1224.00**
36	2015-2016	0.00	0.00	119.00	57.00	295.00	29.00	34.00	182.00	20.00	457.00	0.00	58.00	0.00	**1251.00**
37	2016-2017	1056.00	12.00	306.00	7.00	0.00	0.00	1.00	57.00	52.00	238.00	7.00	0.00	0.00	**1736.00**
38	2017-2018	3.00	5.00	29.00	3.00	0.00	6.00	68.00	603.00	0.00	310.00	569.00	1.00	0.00	**1597.00**
39	2018-2019	20.00	0.00	23.00	27.00	26.00	0.00	0.00	296.00	1.00	378.00	34.00	0.00	0.00	**805.00**
40	2019-2020	0.00	0.00	0.00	94.95	68.07	4.90	7.89	6.53	0.00	52.89	0.00	0.00	0.98	**236.21**
41	2020-2021	174.59	0.00	37.50	167.66	432.68	88.83	27.87	66.51	39.39	454.18	27.92	1.23	1.41	**1519.76**
	Total	**5066.59**	**413.00**	**5267.50**	**22341.61**	**2194.75**	**3605.73**	**2079.76**	**9161.04**	**1136.39**	**9468.06**	**2778.92**	**148.23**	**2.39**	**63663.96**

Abstract of provision under APO 2022-23

Annual Plan of Operations 2022-23

Sr. No.	Description	Components	Financial Provision (Rs. in Lakhs)
1	**2**	**3**	**4**
1	Site Specific works as per FCA approval	Compensatory Afforestation (CA-01)	6042.00
		CAT Plan (CAT-02)	1447.00
		Integrated WMP (IWMP-03)	100.00
		Conditional Works (Other-06)	993.00
		Sub Total (i)	**8582.00**
2	Net Present Value (NPV-04)	Works under 80% NPV Component (80.04% on Sub Total (ii))	51844.00
		Works under 20% NPV Component (19.96% on Sub Total (ii))	12932.00
		Sub Total (ii)	**64776.00**
3	Accrued Interest (NPV-05)	Works under 60% Interest component (91.49% on Sub Total (iii))	2150.00
		Works under 40% Interest component (8.51% on Sub Total (iii))	200.00
		Sub Total (iii)	**2350.00**
		Grand Total (i+ii+iii)	**75708.00**

Abstract of

Implementing Agency wise provision under

Site Specific works

Annual Plan of Operation 2022-23

Abstract of Circle wise allocation for Site Specific works as per FCA approval

(Rs. In Lakhs)

Sr. No.	Implementing Agencies	CA (01)							CAT Plan (02)	IWM Plan (03)	Conditioanl Works (06)			Grand Total CA (9+10+ 11+14)
		PPO		FYO		Maintenance		Total CA (4+6+8)			Plantation	Other (SMC Works, Protection Works, etc.)	Total Others (12+13)	
		Area (ha.)	Amount	Area (ha.)	Amount	Area (ha.)	Amount							
1	2	3	4	5	6	7	8	9	10	11	12	13	14	15
1	APCCF (WL) East, Nagpur							-				164.72	164.72	**164.72**
2	APCCF (WL) West, Mumbai		-			6.550	1.25	1.25					-	**1.25**
3	APCCF, Mangrove Cell, Mumbai					7.000	2.25	2.25					-	**2.25**
4	CCF (T) Amravati			4.710	4.88	353.229	70.29	75.17					-	**75.17**
5	CF (T) Aurangabad	843.132	2,454.16			455.309	100.21	2,554.37			0.52		0.52	**2,554.89**
6	CCF (T) Chandrapur	40.000	148.07	64.000	69.04	1,307.198	256.92	474.02			24.33		24.33	**498.35**
7	CF (T) Dhule	255.300	816.43			1,116.040	233.78	1,050.20	243.83		29.07	78.29	107.36	**1,401.39**
8	CF (T) Gadchiroli			7.000	5.51	1,061.448	211.63	217.14			24.55		24.55	**241.69**
9	CCF (T) Kolhapur	34.140	99.39	16.830	13.01	343.530	50.13	162.53					-	**162.53**
10	CCF (T) Nagpur	98.140	258.71	73.000	75.59	1,657.672	370.87	705.16	319.33	100.00	21.54	468.86	490.40	**1,614.90**
11	CCF (T) Nashik			9.738	10.08	887.160	163.27	173.35			1.41		1.41	**174.76**
12	CCF (T) Pune	1.056	3.07			197.423	32.79	35.86					-	**35.86**
13	CCF (T) Thane	3.528	10.27	71.127	53.42	1,059.551	222.17	285.86	881.25		173.47	2.10	175.57	**1,342.68**
14	CF (T) Yavatmal					988.840	304.53	304.53	3.05		3.63		3.63	**311.21**
Total		**1275.296**	**3,790.09**	**246.405**	**231.52**	**9,440.949**	**2,020.09**	**6,041.70**	**1,447.47**	**100.00**	**278.52**	**713.97**	**992.49**	**8,581.66**

Annexure – III – A

(CA – PPO Works)

ANNUAL PLAN OF OPERATIONS 2022-23 FOR WORKS UNDER CAMPA

Annexure - III- A -- FOR P.P.O. TO BE TAKEN UNDER SANCTIONED PROJECTS

Sr. No.	Circle	Division	Name of the Project	Project ID	Final sanction	Project Area (ha)	Total area of C.A./ A. C.A./ P.C.A. (ha)	Total No of sites with respect to col. 11	Area of P.P.O. at each site	Plantation model	Rate/ha (Rs)	Amount (Rs. Lakhs)	Details of Area under treatment						
													Range	Round	Beat	Compartment no./ survey no.	Latlong	Wheter forest land or non - forest land	Whether tribal/ remote area or non-tribal area
1	2	3	4	5	6	7	8	9	10	11	12	13	14	15	16	17	18	19	20
1	Amravati		Nil																
1	Aurangabad	Aurangabad	Nagpur-Mumbai Super Expressway (Package No.III)	12541	MoEFF.No.FC-II/MH-71/2017-NGP/589214.11.2019	26.88	30.67	1	30.67	1111 (Model-5) New	272034	89.27	Sillod	Phulambri	Phulambri	Gut No.145, 148,138, 146	N 20.07.20.26 E 75.28.36.88	non forest land	non-tribal area
2	Aurangabad	Aurangabad																	
3	Aurangabad	Aurangabad	Nagpur-Mumbai Super Expressway (Package No.II)	12641	MoEFF.No.FC-III/MH-29/2018-NGP/708731.08.2020	166.49	166.49	1	166.49	1111 (Model-5) New	272034	484.60					N 20.26.22.01 E 75.21.14.92	non forest land	non-tribal area
4	Aurangabad	Aurangabad																	
5	Aurangabad	Aurangabad																	
6	Aurangabad	Aurangabad																	
7	Aurangabad	Aurangabad	Nagpur-Mumbai Super Expressway (Package No.II)	12641	MoEFF.No.FC-III/MH-35/2018-NGP/7757 29.01.2021	385.61	385.61	1	14.61	1111 (Model-5) New	272034	42.54	Sillod	Phulambri	Nandra	495	20.13.2.83 75.31.04.35	non forest land	non-tribal area
8	Aurangabad	Aurangabad						1	77.00	1111 (Model-5) New	272034	224.13	Sillod	Phulambri	Phulambri	14,65,93 95	20.14.35.27 75.30.53.33	non forest land	non-tribal area
9	Aurangabad	Aurangabad						1	55.00	1111 (Model-5) New	272034	160.09	Sillod	Phulambri	Phulambri	192	20.14.12.38 75.30.31.54	non forest land	non-tribal area
10	Aurangabad	Aurangabad						1	56.00	1111 (Model-5) New	272034	163.00	Sillod	Sillod	Sillod	293	20.16.10.90 75.30.23.42	non forest land	non-tribal area
11	Aurangabad	Aurangabad						1	18.00	1111 (Model-5) New	272034	52.39	Sillod	Sillod	Sillod	476	20.15.24.52 75.30.19.63	non forest land	non-tribal area
12	Aurangabad	Aurangabad						1	73.00	1111 (Model-5) New	272034	212.49	Sillod	Sillod	Sillod	512	20.14.4.80 75.29.20.20	non forest land	non-tribal area
13	Aurangabad	Aurangabad						1	92.00	1111 (Model-5) New	272034	267.79	Sillod	Sillod	Sillod	740	20.15.21.05 75.27.31.92	non forest land	non-tribal area
			Total					**7**	**385.61**			**1122.43**							
			Total for Aurangabad division			**578.98**		**9**	**582.77**			**1696.30**							

Sr. No.	Circle	Division	Name of the Project	Project ID	Final sanction	Project Area (ha)	Total area of C.A./ A. C.A./ P.C.A. (ha)	Total No of sites with respect to col. 11	Area of P.P.O. at each site	Plantation model	Rate/ha (Rs)	Amount (Rs. Lakhs)	Details of Area under treatment						
													Range	Round	Beat	Compartment no./ survey no.	Latlong	Wheter forest land or non - forest land	Whether tribal/ remote area or non-tribal area
1	2	3	4	5	6	7	8	9	10	11	12	13	14	15	16	17	18	19	20
14	Aurangabad	Hingoli	Ligo-India	12276	MoEF----	121.83	243.66	1	25.00	1111 (Model-5) New	272034	72.77	Sengaon	Yeldari	Tandulwadi	734	19.425261 76.491292	Forest Land	Non tribal area
15	Aurangabad	Hingoli						1	25.00	1111 (Model-5) New	272034	72.77	Sengaon	Yeldari	Bhandari	726	19.45473 76.460767	Forest Land	Non tribal area
16	Aurangabad	Hingoli						1	25.00	1111 (Model-5) New	272034	72.77	Sengaon	Yeldari	Bhandari	726	19.453581 76.460351	Forest Land	Non tribal area
17	Aurangabad	Hingoli						1	25.00	1111 (Model-5) New	272034	72.77	Sengaon	Yeldari	Bhandari	726	19.453456 76.454848	Forest Land	Non tribal area
18	Aurangabad	Hingoli						1	15.00	1111 (Model-5) New	272034	43.66	Sengaon	Yeldari	Yeldari	728	19.451557 76.445063	Forest Land	Non tribal area
19	Aurangabad	Hingoli						1	25.00	1111 (Model-5) New	272034	72.77	Hingoli	Waranga	Waranga	475 B	19.409626 77.400976	Forest Land	Non tribal area
20	Aurangabad	Hingoli						1	25.00	1111 (Model-5) New	272034	72.77	Hingoli	Waranga	Bhtegaon	475 A	19.409626 77.400976	Forest Land	Non tribal area
21	Aurangabad	Hingoli						1	25.00	1111 (Model-5) New	272034	72.77	Aundha	Sidheshwar	Dhegaj	638 B	19.647342 76.945023	Forest Land	Non tribal area
22	Aurangabad	Hingoli						1	12.00	1111 (Model-5) New	272034	34.93	Aundha	Sidheshwar	Sidheshwar	635 A	19.631392 76.969327	Forest Land	Non tribal area
23	Aurangabad	Hingoli						1	25.00	1111 (Model-5) New	272034	72.77	Aundha	Aundha	Sukapur	760	19.585698 77.003771	Forest Land	Non tribal area
24	Aurangabad	Hingoli						1	17.00	1111 (Model-5) New	272034	49.48	Aundha	Aundha	Dudhala	621	19.627674 77.02827	Forest Land	Non tribal area
			Total for Hingoli division			**121.83**	**243.66**	**11**	**244.00**			**710.23**							

Sr. No.	Circle	Division	Name of the Project	Project ID	Final sanction	Project Area (ha)	Total area of C.A./ A. C.A./ P.C.A. (ha)	Total No of sites with respect to col. 11	Area of P.P.O. at each site	Plantation model	Rate/ha (Rs)	Amount (Rs. Lakhs)	Details of Area under treatment						
													Range	Round	Beat	Compartment no./ survey no.	Latlong	Wheter forest land or non - forest land	Whether tribal/ remote area or non-tribal area
1	2	3	4	5	6	7	8	9	10	11	12	13	14	15	16	17	18	19	20
25	Aurangabad	Osmanabad	NH-9 New-65 Solapur - shanghreddi	12208	Moef & CC Government of India NagpurF.No.FC-6/MHB-0/2013/343521.03.2018	4.14	8.28	1	8.28	1111 (Model-5) New	272034	24.10	Tuljapur	Obad	Singoli	27	18.240574 75.95875	Forest land	Non tribal area
26	Aurangabad	Osmanabad	NH-211 New-52 Yedshi-Abad	12370	Moef & CC Government of India NagpurF.No.FC-6/MH-04/2015/NGP/508010.03.2019	1.04	2.08	1	2.08	1111 (Model-5) New	272034	6.06	Bhoom	Wanshi	Wanshi	44	18.38948 75.43074	Forest land	Non tribal area
27	Aurangabad	Osmanabad	NH-361 Ausa -Wargna	12675	Moef & CC Government of India NagpurFC-1/MH-128/2018/NGP/539212.06.2019	2.98	6.00	1	6.00	1111 (Model-5) New	272034	17.46	Ahamadpur	Ahamadpur	Ahamadpur	106 AB	18.750158 76.95317	Forest land	Non tribal area
			Total for Osmanabad division			**8.16**	**16.36**	**3**	**16.36**			**47.63**							
			Total for Aurangabad Circle			**708.97**	**842.79**	**23**	**843.13**			**2454.16**							
1	Chandrapur	Central Chanda	Diversion of 19.792 ha. Of Forest land in construction of Warora (Pool)-Warangal (New) 765 KV/ DC Transmission line in Village Dewada & Ganeri under section -2 of forest (Conservation) Act. 1980 in Chandrapur District in State of Maharashtra	27455	MoEFFC-II/MH-99/2019- NGP/490005.02.2019	19.79	40.00	1	30.00	2500 (Model-6) New	345947	111.05	Wirur	Wirur	Wirur	135	N 19^0 37 39.36 E 79^0 37 3.03	Forest Land	Tribal Area
2	Chandrapur	Central Chanda						1	10.00	2500 (Model-6) New	345947	37.02	Pombhurna	Ghosari	Navegaon Bhuj	586	N 19^0 55 56.31 E 79^0 47 0.94		
3	Chandrapur	Central Chanda																	
4	Chandrapur	Central Chanda																	
5	Chandrapur	Central Chanda																	
			Total for Chandrapur Circle				**40.00**	**2**	**40.00**			**148.07**							

Sr. No.	Circle	Division	Name of the Project	Project ID	Final sanction	Project Area (ha)	Total area of C.A./ A. C.A./ P.C.A. (ha)	Total No of sites with respect to col. 11	Area of P.P.O. at each site	Plantation model	Rate/ha (Rs)	Amount (Rs. Lakhs)	Details of Area under treatment						
													Range	Round	Beat	Compartment no./ survey no.	Latlong	Wheter forest land or non - forest land	Whether tribal/ remote area or non-tribal area
1	2	3	4	5	6	7	8	9	10	11	12	13	14	15	16	17	18	19	20
1	Dhule	Dhule	Diversion of 119.689 ha. Of Reserved Forest Land in favor of Khargone Transmission ltd Sanawad (MP) for construction of 765 D/C Hexa Khandwa-Dhule Transmission line in Dhule district in State of Maharashtra	12527	MoEFFC-III/ MH-24/2017-NGP/7305 Dt. 7.10.20207.10.2020	119.69	240.00	1	20.00	1600 (Model-2) New	295856	63.31	Sangvi	Khambala	Amba	836	21.25076 75.10657	Forest Land	Tribal
2	Dhule	Dhule						1	30.00	1600 (Model-2) New	295856	94.97	Sangvi	Palasner	Khairkhuti	801/1	21.50911 75.04366	Forest Land	Tribal
3	Dhule	Dhule						1	25.00	1600 (Model-2) New	295856	79.14	Sangvi	Palasner	Khairkhuti	801/2	21.50434 75.04524	Forest Land	Tribal
4	Dhule	Dhule						1	25.00	1600 (Model-2) New	295856	79.14	Shripur	Sule	Dahivad	986	21.21057 74.57796	Forest Land	Tribal
5	Dhule	Dhule						1	30.00	1600 (Model-2) New	295856	94.97	Shirpur	Sule	Dahivad	986/1	21.21463 74.57398	Forest Land	Tribal
6	Dhule	Dhule						1	25.00	1600 (Model-2) New	295856	79.14	Shirpur	Vadi	Chandsurya	888	21.50686 74.86114	Forest Land	Tribal
7	Dhule	Dhule						1	30.00	1600 (Model-2) New	295856	94.97	Shirpur	Vadi	Chandsurya	890	21.50268 74.86923	Forest Land	Tribal
8	Dhule	Dhule						1	30.00	1600 (Model-2) New	295856	94.97	Shirpur	Rohini	Rohini	1005	21.21816 75.03679	Forest Land	Tribal
9	Dhule	Dhule						1	25.00	1600 (Model-2) New	295856	79.14	Borad	Vasardi	Budki	885	21.29531 74.43398	Forest Land	Tribal
			Total					**9**	**240.00**			**759.76**							
10	Dhule	Dhule	Diversion of 7.65 ha forest land in favour of National Highway Authority of India (NHAI) for development and operation of four / six laning of bodhare (Km 390.000) to Dhule (Km 452.800) section of Nh-211 (New NH No.52) at Village Borvihar & Narval Tal-Dhule in Dhule District in the State of Maharashtra Regarding.	12655	MoEFFC-II/ MH-98/2018-NGP/7884 Dt. 28.2.202128.02.2021	7.65	15.30	1	15.30	1600 (Model-3) New	346157	56.67	Dhule	Arvi	Purmepada	327	20.4324578 74.3910321	Forest Land	Non Tribal
			Total for Dhule Circle					**10**	**255.30**			**816.43**							

Sr. No.	Circle	Division	Name of the Project	Project ID	Final sanction	Project Area (ha)	Total area of C.A./ A. C.A./ P.C.A. (ha)	Total No of sites with respect to col. 11	Area of P.P.O. at each site	Plantation model	Rate/ha (Rs)	Amount (Rs. Lakhs)	Details of Area under treatment						
													Range	Round	Beat	Compartment no./ survey no.	Latlong	Wheter forest land or non - forest land	Whether tribal/ remote area or non-tribal area
1	2	3	4	5	6	7	8	9	10	11	12	13	14	15	16	17	18	19	20
1	Gadchiroli		Nil																
1	Kolhapur	Sawantwadi	Diversion of 34.135 ha Forest land for construction of Nardave Medium Irrigation Project in favour of Exe. Engg., Medium Project Division, Ambadpal- Kudal in village Durganagar, Bhairavgaon and Nardave, Dist.- Sindhudurg in the state of Maharashtra- Reg.	2793		34.14	31.5650& 2.5700	1	34.14	1111 (Model-4) New	272078	99.39	Dodamrag	Konal	Kendre	1/B&23/1	N. 15 45 35 E. 741132	Forest Land	Non-Tribal area
			Total for Kolhapur Circle			**34.14**	**0.00**	**1**	**34.14**			**99.39**							
1	Nagpur	Nagpur	Up-gradation of Nagpur-Katol National Highway NH-353J from exosting KM 13.000 (Outer ring road, Nagpur to 62.900 (Katol Bypass) In f/o Project Director, PIU-2, NHAI, Nagpur. FP/MH/ROAD/3760	3760	GOIFC-II/MH-143/2021-NGP/872030.09.2021	14.07	15.14 ha (Site No.1)	1	15.14	2500 (Model-6) New	339213	54.95	North	Makardhokda	Udasa	Village Brahmni PH-No.20 Survey No. 376 Tah Umred Dist Nagpur	N 20.545213 E 79.215064	Forest Land	Non tribal area
2	Nagpur	Nagpur					13.00 ha (Site No.4)	1	13.00					Makardhokda	Makardhokda	Village Dawha PH. No.14 Survey No. 11 Tah Umred Dist Nagpur	N 20.5403 E 79.0926		
			Total for Nagpur division			14.07		**2**	**28.14**			**54.95**							
3	Nagpur	Wardha	Pandhari Center Project	11505	G.O.I8-33/2007-PC40463	209.73	70.00	1	70.00	1111 (Model-5) New	272034	203.75	Ashti	Pilapur	Antora (Ahamadpur)	3	N-21.26'9355 E-78.07'1999	Z.J.	NT
			Total for Wardha division			**209.73**	**70.00**	**1**	**70.00**			**203.75**							
			Total for Nagpur Circle			**223.80**	**70.00**	**3**	**98.14**			**258.71**							

Sr. No.	Circle	Division	Name of the Project	Project ID	Final sanction	Project Area (ha)	Total area of C.A./ A. C.A./ P.C.A. (ha)	Total No of sites with respect to col. 11	Area of P.P.O. at each site	Plantation model	Rate/ha (Rs)	Amount (Rs. Lakhs)	Details of Area under treatment						
													Range	Round	Beat	Compartment no./ survey no.	Latlong	Wheter forest land or non - forest land	Whether tribal/ remote area or non-tribal area
1	2	3	4	5	6	7	8	9	10	11	12	13	14	15	16	17	18	19	20
1	Nashik		Nil																
1	Pune	Pune	Construction of 0.056 ha. Of Restroed Forest Land (restored after 1980) under section- 22A of the Maharashtra Private Forest (Acquisition) Act, 1975 in Favour of M/s Percy J Driver for Construction of Forest house and water tank in pune District in the state of Maharashtra.	32692/2004	G.O.I.G.O.I.F.No.6/MHB 098/2007- BHO/ 871144469	0.06	0.06	1	1.00	1111 (Model-5) New	272034	2.91	Pune	Aalandi Chorochi	Lohgaon	F.gut No. 425	N 18 62 5007 E - 73. 944822	Reserve Forest Land	non-tribal area
2	Pune	Pune						1	0.06	1111 (Model-5) New	272034	0.16	Pune	Aalandi Chorochi	Lohgaon	F.gut No. 425	N 18 62 5007 E - 73. 944822	Reserve Forest Land	non-tribal area
			Total for Pune Circle					**2**	**1.06**			**3.07**							
1	Thane	Alibag	Woods Resort Pvt. Ltd. Karnala Holiday Inn	11608	Regional APCCF of G.O.I.6-MHB-044/2008-BHO/8074	2.33	CA	1	2.33	1111 (Model-4) New	272078	6.78	Uran	Jasai	Vindhane	S.No. 219,220	N1857246 E731815	Forest land	Non-tribale
2	Thane	Alibag					PCA	1	1.20	1111 (Model-4) New	272078	3.49	Uran	Vindhane	Vindhane	Village Vindhane S.No. 221	N1857246 E7381664	Forest land	Non-tribale
			Total for Thane Circle					**2**	**3.53**			**10.27**							
1	Yavatmal		Nil																
			Grand Total of PPO Works					**43**	**1275.30**			**3790.09**							

Annexure – III – B

(CA – FYO Works)

ANNUAL PLAN OF OPERATIONS 2022-23 FOR WORKS UNDER CAMPA

Annexure -III-B ---------- FOR F.Y.O. WORKS

Sr. No.	Circle	Division	Name of the Project	Project ID	Final sanction	Area of the Project (ha)	Projectwise total area of FYO	Total No of sites w.r.t. col. 11	Area of plantation at each site	Plantation model	Rate/ha (Rs)	Amount (Rs. Lakhs)	Details of Area under treatment						
													Range	Round	Beat	Compartment no.	Latlong	Whether forest land or non - forest land	Whether tribal /remote area or non-tribal area
1	2	3	4	5	6	7	8	9	10	11	12	13	14	15	16	17	18	19	20
1	Amravati	Amravati	Construction of Lower Sakhali Larger Minor Irrigation Project in Nandgaon in Amravati District	3416	GOI541643635	4.71	4.71	1	4.71	1111 (Model -5) (New)	96769	4.88	Paratwada	Shirasgaon	Vishroli	302	N21.346239 E77.755043	Non-forest land	Non tribal
			Total for Amraavti Circle			**4.71**	**4.71**	1	**4.71**			**4.88**							
1	Aurangabad		Nil																
1	Chandrapur	Central Chanda	Diversion of 31.98 ha. Of Forest Land of South Central Railway for Constrution and laying of Ballarshah to Kazipeth 3rd Broad Geuje Line Railway Tracks	4577	MoEFFC-II/ MH-117/2019 NGP/578030.09.2019	31.98	64.00	1	20.00	1111 (Model -5) (New)	100815	21.57	Pombhurna	Ghosari	Ghosari	546	N19 55 37.4 E79 40 57.2	Forest Land	Tribal Area
2	Chandrapur	Central Chanda						1	20.00	1111 (Model -5) (New)	100815	21.57	Pombhurna	Ghosari	Ghosari	546	N19 55 40.2 E79 41 17.0	Forest Land	Tribal Area
3	Chandrapur	Central Chanda						1	24.00	1111 (Model -5) (New)	100815	25.89	Pombhurna	Ghosari	Ghosari	546	N19 55 33.6 E79 40 53.3	Forest Land	Tribal Area
			Total for Chandrapur Circle			**31.98**	**64.00**	**3**	**64.00**			**69.04**							
1	Dhule		Nil																
1	Gadchiroli	Gadchiroli	District Sports Complex	11673/1115/18-19 dt.28.8.20	G.O.IF.No.MHC-050/2010-BHO/426012.09.201	6.96	6.96	1	7.00	1111 (Model -4) (New)	73505	5.51	Gadchiroli	Gadchiroli	Gadchiroli	172	N 20 10 16 E 80 0 31	Forest Land	Tribal Area
			Total for Gadchiroli Circle			**6.96**	**6.96**	**1**	**7.00**			**5.51**							
1	Kolhapur	Kolhapur	Panchdhara Mahila Khan MSS Ltd Top Kolhapur	12231	G.O.I.MHC022/2014 BHO/554424.07.2019	4.90	4.90	1	4.90	1111 (Model -4) (New)	70703	3.71	Gargoti	Gargoti	Aralgundi	549	74.184284 16.189602	Forest Land	Non tribal
2	Kolhapur	Kolhapur	Airport Authoriity of India	12477	G.O.I.FC2/MH58/2017/NGP/5817 & 602327.12.2019	10.93	10.93	1	10.93	1111 (Model -4) (New)	70703	8.27	Pendakhale	Yelvanjugai	Shembawane	296,297	73.787039 16.812281	Forest Land	Non tribal
			Total for Kolhapur Division			**15.83**	**15.83**	**2**	**15.83**			**11.98**							

Sr. No.	Circle	Division	Name of the Project	Project ID	Final sanction	Area of the Project (ha)	Projectwise total area of FYO	Total No of sites w.r.t. col. 11	Area of plantation at each site	Plantation model	Rate/ha (Rs)	Amount (Rs. Lakhs)	Details of Area under treatment						
													Range	Round	Beat	Compartment no.	Latlong	Whether forest land or non - forest land	Whether tribal /remote area or non-tribal area
1	2	3	4	5	6	7	8	9	10	11	12	13	14	15	16	17	18	19	20
3	Kolhapur	Sangli	Shri Datta Hill Eco Tourism Centr at Islampur	12049	MOEF6MHB/76/2013-BHO/640109.04.2020	1.00	1.00	1	1.00	1111 (Model -5) (New)	96769	1.04	Shirala	Islampur	Red	76	16.980133 74.208003	Forest Land	Non tribal
			Total for Sangli Division			**1.00**	**1.00**	**1**	**1.00**			**1.04**							
			Total for Kolhapur Circle			**16.83**	**16.83**	**3**	**16.83**			**13.01**							
1	Nagpur	Wardha	Dham River Project	11886	GOIF.No6-MHC 1/8/2010-BHO/680643989	36.23	20.00	1	10.00	1111 (Model -5) (New)	96769	10.35	Samudrapur	Kora	Nandori	299	N 20.509025 E 78.977197	Z.J.	Non tribal
2	Nagpur	Wardha						1	10.00	1111 (Model -5) (New)	96769	10.35	Samudrapur	Kora	Nandori	275	N 20. 506307 E 78. 981678	Z.J.	Non tribal
3	Nagpur	Wardha					10.00	1	10.00	1111 (Model -5) (New)	96769	10.35	Wardha	Wardha	Gaul	81,82,84,84	N 20 3142.21 E 78 4527.68	Z.J.	Non tribal
4	Nagpur	Wardha					34.00	1	9.63	1111 (Model -5) (New)	96769	9.97	Wardha	Wardha	Yesamba	361	N-20 3843.01 E-78 4358.04	Z.J.	Non tribal
5	Nagpur	Wardha						1	14.87	1111 (Model -5) (New)	96769	15.40	Wardha	Wardha	Yesamba	99, 100	E 20 3854.14 N 78 437.63	Z.J.	Non tribal
6	Nagpur	Wardha						1	2.73	1111 (Model -5) (New)	96769	2.83	Wardha	Wardha	Yesamba	101, 102	N 20 3911.80 E 78 434.22	Z.J.	Non tribal
7	Nagpur	Wardha						1	6.77	1111 (Model -5) (New)	96769	7.01	Wardha	Wardha	Yesamba	277	N 20 3847.70 E 78 441.53	Z.J.	Non tribal
8	Nagpur	Wardha					4.50	1	4.50	1111 (Model -5) (New)	96769	4.66	Wardha	Wardha	Dhanora	62	N 20 4054.07 E 78 3944.39	Z.J.	Non tribal
9	Nagpur	Wardha					4.50	1	4.50	1111 (Model -5) (New)	96769	4.66	Wardha	Wardha	Mandevgad	132	N-20.685394 E-78.661422	Z.J.	Non tribal
			Total for Wardha Division			**36.23**	**73.00**	**9**	**73.00**			**75.59**							
			Total for Nagpur Circle			**36.23**	**73.00**	**9**	**73.00**			**75.59**							

Sr. No.	Circle	Division	Name of the Project	Project ID	Final sanction	Area of the Project (ha)	Projectwise total area of FYO	Total No of sites w.r.t. col. 11	Area of plantation at each site	Plantation model	Rate/ha (Rs)	Amount (Rs. Lakhs)	Details of Area under treatment						
													Range	Round	Beat	Compartment no.	Latlong	Whether forest land or non - forest land	Whether tribal /remote area or non-tribal area
1	2	3	4	5	6	7	8	9	10	11	12	13	14	15	16	17	18	19	20
1	Nashik	Malegaon	Indian Oil Corporastion Limited Vadodara for Iaying of 18" dia product popeline from Koyali-Ahmednagar-Solapur for transportation of Petroleum	25472	G.O.IFC-1/MH-104/2018-NGP/737020.10.2020	4.87	9.74	1	9.74	1111 (Model-5) (New)	96769	10.08	Malegaon	Karjgvhan	Rajmane	440	N 20.637376 E74.636696	Forest Land	Non tribal
			Total for Nashik Circle			**4.87**	**9.74**	**1**	**9.74**			**10.08**							
1	Pune		Nil																
1	Thane	Alibag	Diversion of 8.2278 ha. of Mangrove forest land for Widening of existing road form Y Junction of North Gate Complex in JN Port Project	12604	Regional APCCF of G.O.I. C-II/MH-88/2018-NGP/581908.10.2019	8.23	ACA (Mangrove plantation)	1	3.00	Magrove Plantation (4444)	219812	7.06	Alibag	Karla	Dhavar	Varsoli S.No. 168	E725226 N184024	Forest Land	Non tribal
2	Thane	Alibag	Diversion of 0.1911 ha. for approach road and laying of underground Electirc cable Village Vindhane Tal. Uran	12517	Reginal Office Nagpur FC-I/MH-117/2018-NGP/615803.02.2020	0.19	1.00	1	1.00	1111 (Model -4) (New)	70703	0.76	Uran	Vindhane	Vindhane	Village Vindhane S.No. 221	73.048769E 18.895332N	Forest Land	Non tribal
			Total for Alibag Division			**8.42**	**1.00**	**2**	**4.00**			**7.81**							
3	Thane	Roha	M.T.H.L. Mumbai trance Herbal Line		MoEFFN-8-89/2013 fc22.1.2016	47.42	11.68	1	11.68	1111 (Model -4) (New)	70703	8.84	Roha	Kolad	Durtoli	gat no 152 Sr no 161 New 144	N1824.223' E7315.498'	Forest Land	Non tribal
4	Thane	Roha					14.71	1	14.71	1111 (Model -4) (New)	70703	11.13	Shriwardhan	Chikhlap	Pangloli	gat no 187 Sr no 76/0	N180521.3 E730347.3	Forest Land	Non tribal
			Total			**47.42**	**26.40**	**2**	**26.40**			**19.97**							

Sr. No.	Circle	Division	Name of the Project	Project ID	Final sanction	Area of the Project (ha)	Projectwise total area of FYO	Total No of sites w.r.t. col. 11	Area of plantation at each site	Plantation model	Rate/ha (Rs)	Amount (Rs. Lakhs)	Details of Area under treatment						
													Range	Round	Beat	Compartment no.	Latlong	Whether forest land or non - forest land	Whether tribal /remote area or non-tribal area
1	2	3	4	5	6	7	8	9	10	11	12	13	14	15	16	17	18	19	20
5	Thane	Roha	Diversion of 15.73 ha.reserve forest land forconstration of Ghotwal Miner irrigation scheme in village Tise in favour executive engineer minor irrigation (l.s.) department in Raigad District of Maharastra	12011	Regional APCCF of GOIMHO7/1/BHO/201221-06-2013	15.73	15.73	1	15.73	1111 (Model -4) (New)	70703	11.90	Murud	Chanera	Birwadi	Birwadi Compt. 263	N18.430684 E73.047578	Forest Land	Non tribal
6	Thane	Roha	Diversion of 39.477 ha.forst land for laying of Gas Ahmadabad in favour of M/S transportation infrastructure co.ltd. In Latur, Usmanabad, Solapur, Pune , Raigad and Thane District.		Regional APCCF of GOI6MSCO66/2006/BHO/345239272	39.48	44.07	1	5.00	625 (Model-) (Old)	51365	2.75	Mhasala	Mhasala	Jambhul	Kelte C.N.741	N18524 E0730519	Forest Land	Non Tribal
7								1	10.00	625 (Model-) (Old)	51365	5.50	Shriwardhan	Dighi	Wadavali	Kudki C.N.712	N181312.2 E0730043.3	Forest Land	Non Tribal
8								1	5.00	625 (Model-) (Old)	51365	2.75	Shriwardhan	Shriwardhan	Karivane	Dharavali C.N.733	N180102.1 E 0730544.1	Forest Land	Non Tribal
9								1	5.00	625 (Model-) (Old)	51365	2.75	Shriwardhan	Shriwardhan	Karivane	Karivane C.N.738	N180021.5 E7306198	Forest Land	Non Tribal
			Total			**39.48**	**44.07**	**4**	**25.00**			**13.74**							
			Total for Roha Division			**86.89**	**70.47**	**7**	**67.13**			**45.61**							
			Total for Thane Circle			**95.31**	**71.47**	**9**	**71.13**			**53.42**							
11	Yavatmal		Nil																
			Grand Total of FYO Works			**196.89**	**246.71**	**27**	**246.41**			**231.52**							

Annexure – III – C

(CA – SYO to 10th YO Works)

ANNUAL PLAN OF OPERATIONS 2022-23 FOR WORKS UNDER CAMPA

Annexure - III- C ------ FOR S.Y.O. to 10th Y.O.

Sr. No.	Circle	Division	Name of the Project	Project ID	Final sanction	Area of the Project (ha)	Year of Operation (i.e. SYO, TYO etc.)	Projectwise total area of SYO, TYO etc.	Total No of sites w.r.t. col. 12	Area of maintenance of plantation at each site	Plantation model being used (no. of plants per ha.)	Rate/ ha (Rs)	Amount (Rs. Lakhs)	Details of Area under treatment						
														Range	Round	Beat	Compartment no.	Latlong	Whether forest land or non - forest land	Whether tribal /remote area or non-tribal area
1	2	3	4	5	6	7	8	9	10	11	12	13	14	15	16	17	18	19	20	21
1	Mangrove Cell Mumbai	MMCU Mumbai	Construction of Storm water pumping station on SNDT Nala	FP-MH/ Others/17277/2015	Regional Office/NGPFC-I/MH-63/ 2017-NGP/1842dt. 30.5.2017	0.2794	TYO	1.000	1	1.000	340.14	31789	0.32	Navi Mumbai	Washi	Ghansoli	S.No.109	N-19.07.38.89 E-72.59.17.72	Forest land	Non-tribal area
2	Mangrove Cell Mumbai	MMCU Mumbai	Construction of BKC. Metro Railway Station at Bandra	FP-MH/ others/11890/2015	Regional Office/NGPFC-I/MH-45/ 2016-NGP/4873dt. 30.1.19	0.91	TYO	1.000	1	1.000	340.14	31789	0.32	Navi Mumbai	Washi	Koparkhairne	S.No.312	N-19.6.53.03 E-72.59.38.30	Forest land	Non-tribal area
3	Mangrove Cell Mumbai	MMCU Mumbai	development of passener waste transport trminal at Nerul, Navi Mmbai.	FP-MH/ Road/22551/ 2016	Regional Office/NGPFC-I/MH-71/ 2017-NGP/3280dt. 13.2.2018	0.46	TYO	1.000	1	1.000	340.14	31789	0.32	Navi Mumbai	Washi	Koparkhairne	S.No.312	N-19.7.44.11 E-72.59.14.05	Forest land	Non-tribal area
4	Mangrove Cell Mumbai	MMCU Mumbai	Construction of New Creek Bridge between Thane Municipal Area to Kalwa & Rabodi.	FP-MH /Others/14746/2015	Regional Office/NGPFC-I/MH-62/ 2017-NGP/3789dt. 5.6.2018	0.2740	TYO	1.000	1	1.000	340.14	31789	0.32	Navi Mumbai	Washi	Ghansoli	S.No.109	N-19.7.34.04 E-72.59.13.74	Forest land	Non-tribal area
5	Mangrove Cell Mumbai	MMCU	Construction of Dharavi Railway Station At Dharavi Metro Route III	FP/MH/RAIL/15662/2015	Regional Office/NGPFC-I/MH-43/ 2016-NGP/4389dt. 4.10.2018	0.34	TYO	1.000	1	1.000	340.14	31789	0.32	Navi Mumbai	Washi	Koparkhairne	S.No.312	N-19.6..51.59 E-72.59.41.00	Forest land	Non-tribal area

Sr. No.	Circle	Division	Name of the Project	Project ID	Final sanction	Area of the Project (ha)	Year of Operation (i.e. SYO, TYO etc.)	Projectwise total area of SYO, TYO etc.	Total No of sites w.r.t. col. 12	Area of maintenance of plantation at each site	Plantation model being used (no. of plants per ha.)	Rate/ ha (Rs)	Amount (Rs. Lakhs)	Details of Area under treatment						
														Range	Round	Beat	Compartment no.	Latlong	Whether forest land or non - forest land	Whether tribal /remote area or non-tribal area
1	2	3	4	5	6	7	8	9	10	11	12	13	14	15	16	17	18	19	20	21
6	Mangrove Cell Mumbai	MMCU	Diversion of forest land to MMRDA for construction of Flyover(Link Road) between Airoli Bridge to Thane Belapur Road.in Thane District.	FP/MH/ROAD/18659/2016	Regional Office/NGPFC-I/MH-103/ 2018-NGP/3417dt. 19.6.2019	0.983	TYO	1.000	1	1.000	340.14	31789	0.32	West Mumbai	Manori	Andheri	S.No.295	N-19.13.51.08 E-72.47.26.85	Forest land	Non-tribal area
7	Mangrove Cell Mumbai	MMCU	Widening and reconstruction of existing bridge across Mithi River.	FP/MH/ROAD/26650/2017	Regional Office/NGPFC-I/MH-113/ 2018-NGP/4752dt. 7.1.2019	0.1944	TYO	1.000	1	1.000	340.14	31789	0.32	West Mumbai	Gorai	Borivali	267	N-19.13.41.90 E-72.48.9.67	Forest land	Non-tribal area
			Grand total of APCCF (Mangrove) Mumbai circle			**3.4408**		**7.000**	**7**	**7.000**			**2.25**							
1	APCCF (WL) Mumbai	CNP Karad	Gamewadi to Pathar wadi	11952	18.11.16--	4.570	5th Y.O.	4.570	1	4.57	-	17845	**0.87**	CNP Karad	Dhebewadi	Sanboro	Atoli	N17°17'15" E073°46'60 "	Forest Land	Non Tribal
	APCCF (WL) Mumbai	CNP Karad	Bholo Canol	11952	18.11.16--	1.980	6th Y.O.	1.980	1	1.98	-	17845	**0.38**	CNP Karad	Helwak	Waghane	Waghane	N17°19'51" E073°41'54 "	Forest Land	Non Tribal
			Grand total of APCCF (WL) Mumbai circle					**6.550**	**2**	**6.550**			**1.25**							
1	Amravati	Amravati	Timtala Minor Irrigation Storage Project Ta. Nandgaon Khandeshwer Dist Amravati (19.80 Ha)	11977	GOINo.FLD-30/2018/C.R. 423/F-3dt. 7/2/2018	19.800	TYO	19.800	1	19.800	1111 (Model-4) (New)	25180	**5.33**	Wadali	Badnera	Jasapur	47,53	N20.770444 E77.75305	Non Forest Land	Non Tribal
			Total for Amravati Divison			**19.800**		**19.800**	**1**	**19.800**			**5.33**							

Sr. No.	Circle	Division	Name of the Project	Project ID	Final sanction	Area of the Project (ha)	Year of Operation (i.e. SYO, TYO etc.)	Projectwise total area of SYO, TYO etc.	Total No of sites w.r.t. col. 12	Area of maintenance of plantation at each site	Plantation model being used (no. of plants per ha.)	Rate/ ha (Rs)	Amount (Rs. Lakhs)	Details of Area under treatment						
														Range	Round	Beat	Compartment no.	Latlong	Whether forest land or non - forest land	Whether tribal /remote area or non-tribal area
1	2	3	4	5	6	7	8	9	10	11	12	13	14	15	16	17	18	19	20	21
2	Amravati	Akola	Paangrabandi Mi Tank	-	MOEFFC-II/MH-57/2017 NGP-Dt. dt. 24/6/2018	19.05	TYO	19.050	1	19.050	1111 (Model-4) (New)	25180	**5.13**	Akola	Murtizapur	Hirpur	04 kinkhed	N. 20.38.49.05 E. 77.23.59.95	Non Forest Land	Non Tribal
			Total for Akola Divison			**19.05**		**19.050**	**1**	**19.050**			**5.13**							
			Total TYO			**38.85**		**38.850**	**2**	**38.850**			**10.47**							
1	Amravati	Amravati	Bhemdi Minor Irrigation Bhemdi Ta. Warud Dist Amravati	11788	GOIFLD-3109/CR 495/F10dt. 21.09.2017	2.48	4th Y.O.	2.530	1	2.530	1111 (Model-4) (New)	17845	**0.48**	Paratwada	Shirajgaon	Vishroli	323,324	N21.341227 E77.756274	Non Forest Land	Non Tribal
			Total 4th Y.O.			**2.48**		**2.530**	**1**	**2.530**			**0.48**							
2	Amravati	Buldhana	Jigoan Major Irr.Project	2169	MoEFFNO148/2006-FCdt. 6/24/2016	178.55	5th Y.O.	119.080	1	119.080	1111 (Model-4) (New)	17845	**22.74**	Ghatbori	Mandawa	Deugaon Sakharsha	441,439,440,435,432,433,434,436,437,438,522,521,525,524,523,578,579,580,581,582,583,584,585,587,588,589,591,496,497,498,499,500,520,607,606,602,601,600,590	N20.413847 E76.674005	Non Forest Land	Non Tribal
	Amravati	Buldhana					5th Y.O.	6.490	1	6.490	1111 (Model-4) (New)	17845	**1.24**	Ghatbori	Mandawa	Deugaon Sakharsha	577	N20.402082 E76.680607	Non Forest Land	Non Tribal
	Amravati	Buldhana					5th Y.O.	18.060	1	18.060	1111 (Model-4) (New)	17845	**3.45**	Ghatbori	Mandawa	Deugaon Sakharsha	529,527,528,427,426,428,419,429,430,421	N20..398094 E76.683872	Non Forest Land	Non Tribal
	Amravati	Buldhana					5th Y.O.	7.680	1	7.680	1111 (Model-4) (New)	17845	**1.47**	Ghatbori	Mandawa	Deugaon Sakharsha	417	N20.404798 E76.681202	Non Forest Land	Non Tribal
	Amravati	Buldhana					5th Y.O.	27.260	1	27.260	1111 (Model-4) (New)	17845	**5.21**	Ghatbori	Mandawa	Deugaon Sakharsha	535,536,537,538,539,540,541,542,543,545,546,547,548,549,550	N20.405017 E76.684793	Non Forest Land	Non Tribal
			Total for Buldhana Divison			**178.55**		**178.570**	**5**	**178.570**			**34.10**							

Sr. No.	Circle	Division	Name of the Project	Project ID	Final sanction	Area of the Project (ha)	Year of Operation (i.e. SYO, TYO etc.)	Projectwise total area of SYO, TYO etc.	Total No of sites w.r.t. col. 12	Area of maintenance of plantation at each site	Plantation model being used (no. of plants per ha.)	Rate/ ha (Rs)	Amount (Rs. Lakhs)	Details of Area under treatment						
														Range	Round	Beat	Compartment no.	Latlong	Whether forest land or non - forest land	Whether tribal /remote area or non-tribal area
1	2	3	4	5	6	7	8	9	10	11	12	13	14	15	16	17	18	19	20	21
3	Amaravati	Akola	Jigoan Major Irr.Project	2169	MoEFP.No.8/148/2006-FCdt. 6/24/2016	56.09	5th Y.O.	9.670	1	9.670	1111 (Model-4) (New)	17845	**1.85**	Akola	Loni	Loni	304	N21044 E765940	Non Forest Land	Non Tribal
	Amaravati	Akola					5th Y.O.	26.420	1	26.420	1111 (Model-4) (New)	17845	**5.04**	Akola	Loni	Loni	177, 186, 187	N205720 E776227	Non Forest Land	Non Tribal
	Amaravati	Akola					5th Y.O.	7.000	1	7.000	1111 (Model-4) (New)	17845	**1.34**	Akot	Bordi	Bordi	94,95	N. 20.56.21.21 E. 76.56.25.24	Non Forest Land	Non Tribal
	Amaravati	Akola					5th Y.O.	13.000	1	13.000	1111 (Model-4) (New)	17845	**2.48**	Akot	Bordi	Bordi	516, 519, 520, 521	20.4111 77.0902	Non Forest Land	Non Tribal
			Total for Akola Divison			**56.09**		**56.090**	**4**	**56.090**			**10.71**							
			Total 5th Y.O.			**234.64**		**234.660**	**9**	**234.660**			**44.81**							
4	Amravati	Amravati	Cons.of approach in re & amp laying of ele.line from Amravati to Chandur Rly stn shri.prashant Rathi.	11867	GOIFLD-3112/CRI82/F10dt. 1/29/2015	0.56	6th Y.O.	2.000	1	2.000	1111 (Model-4) (New)	17845	**0.38**	Wadali	Wadali	S-Wadali	137P Survey No.52 Koop No.13	N20.5456 E77.4741	Forest Land	Non Tribal
			Total for Amravati Divison			**0.56**		**2.000**	**1**	**2.000**			**0.38**							
5	Amravati	Buldhana	Sk. Salim Sk. Rajjak	12316	GOIMHB 62/2014-BHO /426dt. 10/30/2015	0.14	6th Y.O.	0.090	1	0.090	1111 (Model-4) (New)	17845	**0.02**	Ghatbori	Mandawa	D. Sakarsha	614	N20 25.777 E76 40.694	Non Forest Land	Non Tribal
			Total for Buldhana Divison			**0.14**		**0.090**	**1**	**0.090**			**0.02**							
			Total 6th Y.O.			**0.70**		**2.090**	**2**	**2.090**			**0.40**							

Sr. No.	Circle	Division	Name of the Project	Project ID	Final sanction	Area of the Project (ha)	Year of Operation (i.e. SYO, TYO etc.)	Projectwise total area of SYO, TYO etc.	Total No of sites w.r.t. col. 12	Area of maintenance of plantation at each site	Plantation model being used (no. of plants per ha.)	Rate/ ha (Rs)	Amount (Rs. Lakhs)	Details of Area under treatment						
														Range	Round	Beat	Compartment no.	Latlong	Whether forest land or non - forest land	Whether tribal /remote area or non-tribal area
1	2	3	4	5	6	7	8	9	10	11	12	13	14	15	16	17	18	19	20	21
6	Amravati	Amravati	Chandrabhaga Barriage minor irrigation Project	11908	G.O.I.6-MHB-62/2011-BHO/1358dt. 8/26/2013	1.47	8th Y.O.	1.470	1	1.470	1111 (Model-4) (New)	17845	**0.28**	Paratwada	Shirajgaon	Vishroli	302	N21.344716 E77.749421	Non Forest Land	Non Tribal
7	Amravati	Amravati	Linga M.I.Project tal.Warud Distt. Amt.	12035	G.O.I.6-MHB-34/2012-BHO/1719dt. 10/12/2013	3.25	8th Y.O.	3.250	1	3.250	1111 (Model-4) (New)	17845	**0.62**	Warud	Linga	Linga	391	N21.536417 E78.422122	Non Forest Land	Non Tribal
8	Amravati	Amravati	Wasani (BK) Medium irrigation project	3108	G.O.I.6-MHBC-02/2009-BHO/056dt. 5/22/2014	24.50	8th Y.O.	24.500	1	24.500	1111 (Model-4) (New)	17845	**4.68**	Paratwada	Shirajgaon	Vishroli	262,269,294,296,297& 302	N21.344995 E77.748098	Non Forest Land	Non Tribal
			Total for Amravati Divison			**29.22**		**29.220**	**3**	**29.220**			**5.58**							
9	Amravati	Buldhana	Mahadev Trambak Amle Pipe line of Deulgaon sakersha	11846	G.O.I.MHB 004/2011Bho/1838dt. 11/21/2012	0.25	8th Y.O.	0.224	1	0.224	400	17845	**0.04**	Buldhana	Gummi	Pimpalgaon Sarai	348	N20 22.352 E76 05.517	Non Forest Land	Non Tribal
10	Amravati	Buldhana	Sk Yusuf sk Dalla Pipe line of Deulgaon sakersha	11932	G.O.I.MHB 130/2011Bho/1662dt. 10/15/2012	0.25	8th Y.O.	0.090	1	0.090	400	17845	**0.02**	Buldhana	Gummi	Pimpalgaon Sarai	348	N20 22.318 E76 05.516	Non Forest Land	Non Tribal
11	Amravati	Buldhana	Shetkari Upsa sinchain Sanstha Papie line of Deulgaon sakersha	11857	G.O.I.MHB 083/2011Bho/1936 dt. 12/10/2012	0.25	8th Y.O.	0.033	1	0.033	400	17845	**0.01**	Buldhana	Gummi	Pimpalgaon Sarai	348	N20 22.297 E76 05.500	Non Forest Land	Non Tribal
12	Amravati	Buldhana	Pimpalkhuta to Ugla Pipeline Shri Eknath Dagadu Tathe	12008	G.O.I.6 MHB-12 /2012 - BHO/161dt. 2/3/2014	0.05	8th Y.O.	0.053	1	0.053	1111 (Model-4) (New)	17845	**0.00**	Deulgaon Raja	Sindkhed Raja	Palskhed Chakka	549	--	Non Forest Land	Non Tribal
13	Amravati	Buldhana	Sarangwadi Storage Tank Project	12087	G.O.I.6 MHC 063/2012 - BHO/1418dt. 8/5/2014	24.58	8th Y.O.	24.580	1	24.580	1111 (Model-4) (New)	17845	**4.69**	Buldhana	Gummi	Dhalsavangi	Gut No.280	N20 23.061 E76 02.198	Non Forest Land	Non Tribal
			Total for Buldhana Divison			**25.38**		**24.979**	**5**	**24.979**			**4.76**							
			Total 8th Y.O.			**54.60**		**54.199**	**8**	**54.199**			**10.34**							

Sr. No.	Circle	Division	Name of the Project	Project ID	Final sanction	Area of the Project (ha)	Year of Operation (i.e. SYO, TYO etc.)	Projectwise total area of SYO, TYO etc.	Total No of sites w.r.t. col. 12	Area of maintenance of plantation at each site	Plantation model being used (no. of plants per ha.)	Rate/ ha (Rs)	Amount (Rs. Lakhs)	Details of Area under treatment						
														Range	Round	Beat	Compartment no.	Latlong	Whether forest land or non - forest land	Whether tribal /remote area or non-tribal area
1	2	3	4	5	6	7	8	9	10	11	12	13	14	15	16	17	18	19	20	21
14	Amaravati	Akola	Sukli	11906	MoEFNo.6MHC 035/2010-BHO/1918dt. 12.10.2010	19.90	9th Y.O.	19.900	1	19.900	400	17845	**3.80**	Patur	Patur	Patur	gut no 222	N.20.29.01.88 E.76.51.47.64	Non Forest Land	Non Tribal
			Total 9th Y.O.					**19.900**	**1**	**19.900**			**3.80**							
15	Amravati	Buldana	Constr. Of Main Canal Dagadwadi I.I.S. of Village Jawalkhed	11737	G.O.I.6/MHB143/2008-BHO/690dt. 3/18/2009	1.00	10th Y.O.	1.000	1	1.000	400	17845	**0.00**	Khamgaon	Lakhanwada	Shirla Nemane	619		Non Forest Land	Non Tribal
			Total 10th Y.O.			**1.00**		**1.000**	**1**	**1.000**			**0.00**							
			Grand total of Amravati circle			**332.27**		**353.229**	**24**	**353.229**			**70.29**							
1	Aurangabad	Beed	NH-211		GOIMHB-84/2014/BHO/1964dt. 6/23/2017	1.16	SYO	1.160	1	1.000	1111 (Model-4) (New)	35697	**0.38**	Beed	Neknur	Kolwadi	179.000	18.5158 75.4425	RF	Non Tribal
			Total SYO			**1.16**		**1.160**	**1**	**1.000**			**0.38**							
2	Aurangabad	Beed	Daherji	11670	GOIF.No.8-10/2009-FCDt.19/02/2016	45	2nd+6th Yr	45.000	1	45.000	400+ 1100	26111	**12.57**	Beed	Beed	Rajuri N	705	19.07931 75.620627	RF	Non Tribal
	Aurangabad	Beed		11670		35	2nd+6th Yr	35.000	1	35.000	400+ 1100	26111	**9.78**	Beed	Neknur	Karchondi	111	18.713789 75.613009	RF	Non Tribal
	Aurangabad	Beed		11670		40	2nd+6th Yr	40.000	1	40.290	400+ 1100	26111	**11.26**	Beed	Neknur	Imampur	54	18.927322 75.794585	RF	Non Tribal
	Aurangabad	Beed		11670		30	2nd+6th Yr	30.000	1	30.000	400+ 1100	26111	**8.38**	Beed	Neknur	Imampur	60/1	18.968179 75.899846	RF	Non Tribal
	Aurangabad	Beed		11670		40	6th Y.O.	40.000	1	40.000	400	17845	**7.64**	Beed	Neknur	Imampur	279	18.918099 75.802188	RF	Non Tribal
	Aurangabad	Beed		11670		55	6th Y.O.	55.000	1	55.000	400	17845	**10.50**	Beed	Neknur	Imampur	521	18.881693 75.856997	RF	Non Tribal
	Aurangabad	Beed		11670		45	6th Y.O.	45.000	1	45.000	400	17845	**8.59**	Beed	Neknur	Karchondi	346	18.848693 75.656865	RF	Non Tribal
	Aurangabad	Beed		11670		40	6th Y.O.	40.000	1	40.000	400	17845	**7.64**	Beed	Neknur	Karchondi	290	18.849081 75.700538	RF	Non Tribal
	Aurangabad	Beed		11670		40	6th Y.O.	40.000	1	40.000	400	17845	**7.64**	Beed	Neknur	Karchondi	163	18.847378 75.697768	RF	Non Tribal
	Aurangabad	Beed		11670		35	6th Y.O.	35.000	1	35.000	400	17845	**6.68**	Beed	Neknur	Imampur	382	18.881651 75.85568	RF	Non Tribal
	Aurangabad	Beed		11670		40	6th Y.O.	40.000	1	40.000	400	17845	**7.64**	Beed	Beed	Rajuri N	177	19.071708 75.609342	RF	Non Tribal
			Total for Beed Divison			**445.29**		**445.000**	**11**	**445.290**			**98.32**							

Sr. No.	Circle	Division	Name of the Project	Project ID	Final sanction	Area of the Project (ha)	Year of Operation (i.e. SYO, TYO etc.)	Projectwise total area of SYO, TYO etc.	Total No of sites w.r.t. col. 12	Area of maintenance of plantation at each site	Plantation model being used (no. of plants per ha.)	Rate/ ha (Rs)	Amount (Rs. Lakhs)	Details of Area under treatment						
														Range	Round	Beat	Compartment no.	Latlong	Whether forest land or non - forest land	Whether tribal /remote area or non-tribal area
1	2	3	4	5	6	7	8	9	10	11	12	13	14	15	16	17	18	19	20	21
3	Aurangabad	Osmanabad	Laying of water pipe line Ramkund			1	6th Y.O.	1.000	1	1.000	625 (Model-5) (Old)	17845	**0.19**	Bhoom	Bhoom	Bhoom	55A	18.32966 75.4208	Non Forest Land	Non Tribal
			Total for Osmanabad Divison			**1**		**1.000**	**1**	**1.000**			**0.19**							
			Total 6th Y.O.						**12**	**446.290**			**98.51**							
	Aurangabad	A'bad	132 KV Savangi-Pishor Transmission line in Village Ganori	12158	6-MHB-118/2012-BHO/0016dt. 6.1.2014	4.0095	8th Y.O.	4.010	1	8.019	1111 (Model-3) (Old)	17845	**1.32**	Kh'bad	Ganori	Ganori West	23,24A	N 20.01.1777 E75.35.55.58	Forest Land	Non Tribal
			Total 8th Y.O.			**4.010**		**4.010**	**1**	**8.019**			**1.32**							
			Grand total of Auranbad circle			**450.30**		**5.170**	**14**	**455.309**			**100.21**							
1	Chandrapur	Chandrapur	Divversion Of 432.6791 ha Of Forest land In favour of Power Grid constrcution of 800 KV HVDC Raigarh-Pugalur Transmision line Passing Through the Forest area in Total 76 Villages of Four Division In Chandrapur District Chandrapur	12160	G. O. I. F.No. FC-III/MH-30/2018-NGP4198dt. 5/9/2018	432.68	4th Y.O.	100.000	1	100.000	1111 (Model-3) (Old)	18696	**20.00**	C'pur	Morawa	Morawa	518	19.992834 79.2162782	Forest Land	Tribal
	Chandrapur	Chandrapur					4th Y.O.	25.000	1	25.000	1111 (Model-3) (Old)	18696	**5.00**	Saoli	Saoli	Sadagad	1800	N20 02.361 E79 41.715	Forest Land	Tribal
	Chandrapur	Chandrapur					4th Y.O.	20.000	1	20.000	1111 (Model-3) (Old)	18696	**4.00**	Saoli	Saoli	Chak Piranji	1713	N20 04.386 E79 49.288	Forest Land	Tribal
	Chandrapur	Chandrapur					4th Y.O.	5.000	1	5.000	1111 (Model-3) (Old)	18696	**1.00**	Saoli	Pathari	meha	157	N20 13.380 E79 55.505	Forest Land	Tribal
	Chandrapur	Chandrapur					4th Y.O.	25.000	1	25.000	1111 (Model-3) (Old)	18696	**5.00**	Saoli	Pathari	Gewara	1461p	N20 14.489 E79 56.161	Forest Land	Tribal
	Chandrapur	Chandrapur					4th Y.O.	20.000	1	20.000	1111 (Model-3) (Old)	18696	**4.00**	Saoli	Vyahad	Samda	201	N20 05.860 E79 56.553	Forest Land	Tribal
	Chandrapur	Chandrapur					4th Y.O.	32.000	1	32.000	1111 (Model-3) (Old)	17845	**6.11**	B'wati	Masal	Pirali	907 / Gat 65	N 20° 12' 38" E 79° 8' 0 "	Forest Land	Non Tribal
	Chandrapur	Chandrapur					4th Y.O.	25.000	1	25.000	1111 (Model-3) (Old)	17845	**4.77**	B'wati	Masal	Masal	899	20° 1851' 99" 79° 1773' 32"	Forest Land	Non Tribal
	Chandrapur	Chandrapur					4th Y.O.	40.000	1	40.000	1111 (Model-3) (Old)	17845	**7.64**	Warora	Tembhurda	Anajnagao	1	20^0 41' 88.88" 780 99' 47.45"	Forest Land	Non Tribal

Sr. No.	Circle	Division	Name of the Project	Project ID	Final sanction	Area of the Project (ha)	Year of Operation (i.e. SYO, TYO etc.)	Projectwise total area of SYO, TYO etc.	Total No of sites w.r.t. col. 12	Area of maintenance of plantation at each site	Plantation model being used (no. of plants per ha.)	Rate/ ha (Rs)	Amount (Rs. Lakhs)	Details of Area under treatment						
														Range	Round	Beat	Compartment no.	Latlong	Whether forest land or non - forest land	Whether tribal /remote area or non-tribal area
1	2	3	4	5	6	7	8	9	10	11	12	13	14	15	16	17	18	19	20	21
	Chandrapur	Chandrapur	Divversion Of 432.6791 ha Of Forest land In favour of Power Grid constrcution of 800 KV HVDC Raigarh-Pugalur Transmision line Passing Through the Forest area in Total 76 Villages of Four Division In Chandrapur District Chandrapur	12160	G. O. I.	432.68	4th Y.O.	25.000	1	25.000	1111 (Model-3) (Old)	17845	**4.77**	Warora	Tembhurda	Mahalgaon	2	20^0 43' 88.6" 780 99' 68.65"	Forest Land	Non Tribal
	Chandrapur	Chandrapur					4th Y.O.	10.000	1	10.000	1111 (Model-3) (Old)	17845	**1.91**	Warora	Tembhurda	KEM	5	20^0 38' 23.17" 79008' 57.12"	Forest Land	Non Tribal
	Chandrapur	Chandrapur					4th Y.O.	25.000	1	25.000	1111 (Model-3) (Old)	17845	**4.77**	Warora	Shegaon	Shegaon	10	20^0 28' 26.01" 790 12' 19.67"	Forest Land	Non Tribal
	Chandrapur	Chandrapur					4th Y.O.	20.000	1	20.000	1111 (Model-3) (Old)	17845	**3.82**	Warora	Shegaon	Shegaon	10	20^0 27' 67.65" 790 13' 34.77"	Forest Land	Non Tribal
	Chandrapur	Chandrapur					4th Y.O.	25.000	1	25.000	1111 (Model-3) (Old)	17845	**4.77**	Warora	Shegaon	Mesa	12	20^0 31' 85.77" 790 10' 91.97"	Forest Land	Non Tribal
			Total					**397.000**	**14**	**397.000**			**77.58**							
2	Chandrapur	Chandrapur	Diversion Of 87.97 ha Of Forest Land for Expansion Of Explosives manufacturing Unit at mauza Chakdoh Th. Katol Dist Nagpur		G.O.I.F.No. 8-23/2017-FCdt. 17/12/2018	87..97	4th Y.O.	50.000	1	50.000	1111 (Model-3) (Old)	18696	**10.00**	Saoli	Saoli	Chak Piranji	1701	N20 05.865 E79 49.301	Forest Land	Tribal
	Chandrapur	Chandrapur					4th Y.O.	40.000	1	40.000	1111 (Model-3) (Old)	18696	**8.00**	Saoli	Saoli	Chak Piranji	1701	N20 05.859 E79 49.294	Forest Land	Tribal
			Total					**90.000**	**2**	**90.000**			**18.00**							
4	Chandrapur	Chandrapur	121.58 Ha Forest Land of Durgapur Deep Extra Open Cast Mine In favour Of Western Coalfied Limited In District Chandrapur		G.O.I.MoEF No. 8-84/2014-FCdt. 16/12/2015	121.58	4th Y.O.	14.000	1	14.000	1111 (Model-3) (Old)	17845	**2.67**	Saoli	Vyahad	Samda	201	N20 04.653 E79 57.094	Forest Land	Non Tribal
	Chandrapur	Chandrapur					4th Y.O.	11.000	1	11.000	1111 (Model-3) (Old)	17845	**2.10**	Saoli	Rajoli	Rajoli	315	N20 09.625 E79 43.558	Forest Land	Non Tribal
	Chandrapur	Chandrapur					4th Y.O.	14.000	1	14.000	1111 (Model-3) (Old)	17845	**2.67**	Bhadrawati	Pawana	Pawana	9	N 20° 14' 48" E 79° 6' 26"	Forest Land	Non Tribal
	Chandrapur	Chandrapur					4th Y.O.	30.000	1	30.000	1111 (Model-3) (Old)	17845	**5.73**	Bhadrawati	Pawana	Masal	915	N 20° 16' 12" E 79° 8' 0 "	Forest Land	Non Tribal
			Total					**69.000**	**4**	**69.000**		**71380**	**13.17**							

Sr. No.	Circle	Division	Name of the Project	Project ID	Final sanction	Area of the Project (ha)	Year of Operation (i.e. SYO, TYO etc.)	Projectwise total area of SYO, TYO etc.	Total No of sites w.r.t. col. 12	Area of maintenance of plantation at each site	Plantation model being used (no. of plants per ha.)	Rate/ ha (Rs)	Amount (Rs. Lakhs)	Details of Area under treatment						
														Range	Round	Beat	Compartment no.	Latlong	Whether forest land or non - forest land	Whether tribal /remote area or non-tribal area
1	2	3	4	5	6	7	8	9	10	11	12	13	14	15	16	17	18	19	20	21
5	Chandrapur	Chandrapur	Diversion of 5.4425 Ha Forest Land Construction and laying of Diversion /Realigment of Existing 220 kv chandrapur Warora trsnsmission line	FA/MH/TRASNS/8945/2014	MoEFF.NO.FC-II/MH/13/2015 NGP/1212dt. 6/12/2017	5.440	4th Y.O.	10.900	1	10.900	1111 (Model-3) (Old)	17845	**2.08**	Bhadrawati	Bhadrawati	Tirwanja	203	N 20° 4 ' 51" E 79° 14' 48 "	Forest Land	Non Tribal
			Total					**10.900**	**1**	**10.900**			**2.08**							
			Total for Chandrapur division						**21**	**566.900**			**110.84**							
1	Chandrapur	Bramhapuri	800 KV HVDC Raigarh (Chhatisgarh) to Pugalur (Tamilnadu) Transmission Line	12160	MoEFFC-III/MH-30/2018-NGP/4198dt. 9/5/2018	46.2291	4th Y.O.	78.000	1	78.000	2500 (Model-1) (New)	17845	**14.89**	Nagbhid	Mindala	Kosambi	763	N20 34 24.26 E079 45 46.42	Forest Land	Non Tribal
	Chandrapur	Bramhapuri					4th Y.O.	50.000	1	50.000	2500 (Model-1) (New)	17845	**9.55**	Sindewahi	Navargaon	Alesur	238	N20 22 19.0 E079 33 26.1	Forest Land	Non Tribal
			Total						**2**	**128.000**			**24.44**							
3	Chandrapur	Bramhapuri	132 KV DC Sindewahi Substation to Bramhapuri Substation Transmission Line	12494	MoEFFC-II/MH-70/2017-NGP/3021dt. 13/12/2017	22.7745	4th Y.O.	45.550	1	45.550	1111 (Model-4) (New)	17845	**8.70**	Sindewahi	Sindewahi	Dongergaon	1266	N20 19 29.9 E079 40 30.5	Forest Land	Non Tribal
	Chandrapur	Bramhapuri					4th Y.O.	1.728	1	1.728	1111 (Model-4) (New)	17845	**0.33**	Sindewahi	Sindewahi	Dongergaon	1266	N20 19 43.1 E079 33 26.1	Forest Land	Non Tribal
			Total					**47.278**	**2**	**47.278**			**9.03**							
6	Chandrapur	Bramhapuri	Construction of 132 KV D/C Transmission line from Bramhapuri to Nagbhid Traction Substation, Nagbhid	12494	MoEFFC-I/MH-74/2017-NGP/1889dt. 11/6/2017	1.134	4th Y.O.	2.270	1	2.270	2500 (Model-1) (New)	17845	**0.43**	North Bramhapuri	Bramhapuri	Bramhapuri	139	N20 36 52.0 E079 49 48.1	Forest Land	Non Tribal
			Total					**2.270**	**1**	**2.270**			**0.43**							
			Total for Bramhapuri division					**49.548**	**5**	**177.548**			**33.90**							

Sr. No.	Circle	Division	Name of the Project	Project ID	Final sanction	Area of the Project (ha)	Year of Operation (i.e. SYO, TYO etc.)	Projectwise total area of SYO, TYO etc.	Total No of sites w.r.t. col. 12	Area of maintenance of plantation at each site	Plantation model being used (no. of plants per ha.)	Rate/ ha (Rs)	Amount (Rs. Lakhs)	Details of Area under treatment						
														Range	Round	Beat	Compartment no.	Latlong	Whether forest land or non - forest land	Whether tribal /remote area or non-tribal area
1	2	3	4	5	6	7	8	9	10	11	12	13	14	15	16	17	18	19	20	21
1	Chandrapur	Central Chanda	Diversion of 432.6791 ha.of forest land in favour of power Grid construction of 800 KV HVDC Raigarh-puglur Transmission line Passing Through the Forest area (balance Chandrapur Dn.Target)	12160	MoEFFC-III/MH-30/2018-NGP/3883dt. 31.10.2018	432.679	4th Y.O.	20.000	1	20.000	2500 (Model-1) (New)	18696	**4.00**	Rajura	Rajura	Rampur	152	N19 46'37.1" E79 2031.1"	Forest Land	Tribal
	Chandrapur	Central Chanda					4th Y.O.	10.000	1	10.000	2500 (Model-1) (New)	18696	**2.00**	Pombhurna	Pombhurna	Borghat	586	N19 55 45.8 E79 46 57.6	Forest Land	Tribal
	Chandrapur	Central Chanda					4th Y.O.	25.000	1	25.000	2500 (Model-1) (New)	18696	**5.00**	Pombhurna	Ghosari	Ghosari	546	N19 54 58.6 E79 40 11.9	Forest Land	Tribal
	Chandrapur	Central Chanda					4th Y.O.	25.000	1	25.000	2500 (Model-1) (New)	18696	**5.00**	Pombhurna	Ghosari	Chak Kosambi	548	N19 53 47.0 E79 40 23.9	Forest Land	Tribal
	Chandrapur	Central Chanda					4th Y.O.	15.000	1	15.000	1111 (Model-4) (New)	18696	**3.00**	Ballarshah	Manora	Visnunagar	567	N19 50.646 E79 31.791	Forest Land	Tribal
	Chandrapur	Central Chanda					4th Y.O.	15.000	1	15.000	1111 (Model-4) (New)	18696	**3.00**	Pombhurna	Dighori	Pipari Despande	553 (B)	N19 51 48.3 E79 45 06.0	Forest Land	Tribal
	Chandrapur	Central Chanda					4th Y.O.	20.000	1	20.000	1111 (Model-4) (New)	18696	**4.00**	Pombhurna	Pombhurna	Kasrgatta	91	N19 51 30.1 E79 35 10.8	Forest Land	Tribal
	Chandrapur	Central Chanda					4th Y.O.	25.000	1	25.000	1111 (Model-4) (New)	18696	**5.00**	Pombhurna	Pombhurna	Pombhurna	98	N19 49 40.1 E79 37 14.4	Forest Land	Tribal
1	Chandrapur	Central Chanda	Diversion of 432.6791 ha.of forest land in favour of power Grid construction of 800 KV HVDC Raigarh-puglur Transmission line Passing Through the Forest area (balance Chandrapur Dn.Target)	12160	MoEFFC-III/MH-30/2018-NGP/3883dt. 31.10.2018	432.679	4th Y.O.	20.000	1	20.000	2500 (Model-1) (New)	18696	**4.00**	Pombhurna	Ghosari	Bembal	543	N19 56 45.7 E79 41 56.3	Forest Land	Tribal
	Chandrapur	Central Chanda					4th Y.O.	20.000	1	20.000		18696	**4.00**	Pombhurna	Ghosari	Bembal	543	N19 56 49.1 E79 41 47.6	Forest Land	Tribal
	Chandrapur	Central Chanda					4th Y.O.	20.000	1	20.000		18696	**4.00**	Pombhurna	Ghosari	Bembal	543	N19 56 46.6 E79 42 05.9	Forest Land	Tribal
	Chandrapur	Central Chanda					4th Y.O.	20.000	1	20.000		18696	**4.00**	Pombhurna	Ghosari	Bembal	543	N19 56 45.2 E79 42 14.7	Forest Land	Tribal
	Chandrapur	Central Chanda					4th Y.O.	20.000	1	20.000		18696	**4.00**	Pombhurna	Ghosari	Borghat	586	N19 56 12.5 E79 46 22.7	Forest Land	Tribal
	Chandrapur	Central Chanda					4th Y.O.	20.000	1	20.000		18696	**4.00**	Pombhurna	Ghosari	Borghat	586	N19 55 55.1 E79 46 13.4	Forest Land	Tribal
	Chandrapur	Central Chanda					4th Y.O.	20.000	1	20.000		18696	**4.00**	Pombhurna	Ghosari	Borghat	586	N19 55 56.2 E79 46 15.4	Forest Land	Tribal
	Chandrapur	Central Chanda					4th Y.O.	20.000	1	20.000	1111 (Model-4) (New)	18696	**4.00**	Pombhurna	Ghosari	Ghosari	589	N19 55 32.1 E79 41 36.4	Forest Land	Tribal
	Chandrapur	Central Chanda					4th Y.O.	26.000	1	26.000		18696	**5.20**	Pombhurna	Ghosari	Borghat	586	N19 56 00.2 E79 46 28.2	Forest Land	Tribal
			Total					**341.000**	**17**	**341.000**			**68.22**							

Sr. No.	Circle	Division	Name of the Project	Project ID	Final sanction	Area of the Project (ha)	Year of Operation (i.e. SYO, TYO etc.)	Projectwise total area of SYO, TYO etc.	Total No of sites w.r.t. col. 12	Area of maintenance of plantation at each site	Plantation model being used (no. of plants per ha.)	Rate/ ha (Rs)	Amount (Rs. Lakhs)	Details of Area under treatment						
														Range	Round	Beat	Compartment no.	Latlong	Whether forest land or non - forest land	Whether tribal /remote area or non-tribal area
1	2	3	4	5	6	7	8	9	10	11	12	13	14	15	16	17	18	19	20	21
4	Chandrapur	Central Chanda	121.58 Ha. Forest Land of Durgapur Deep Extra Open Cast Mine in Favour of Western Coalfied Limited In District Chandrapur		GOIMoEFNo.8-84/2014-FCdt. 16.12.2015	121.58	4th Y.O.	20.000	1	20.000	1111 (Model-4) (New)	18696	**4.00**	Ballarshah	Manora	Itoli 2	506	N19 54.609 E790 27.547	Forest Land	Tribal
	Chandrapur	Central Chanda					4th Y.O.	10.000	1	10.000	1111 (Model-4) (New)	18696	**2.00**	Rajura	Rajura	Somthana	166	N19 44'15" E79 2122"	Forest Land	Tribal
	Chandrapur	Central Chanda					4th Y.O.	20.000	1	20.000	1111 (Model-4) (New)	18696	**4.00**	Rajura	Rajura	Somthana	154	N19 43'31" E79 21'32"	Forest Land	Tribal
	Chandrapur	Central Chanda					4th Y.O.	20.000	1	20.000	1111 (Model-4) (New)	18696	**4.00**	Rajura	Tembhurwai	Khambada	178	N19 39'42" E79 25'27"	Forest Land	Tribal
	Chandrapur	Central Chanda					4th Y.O.	20.000	1	20.000	1111 (Model-4) (New)	18696	**4.00**	Rajura	Tembhurwai	Tembhurwai	168	N19 41'32" E79 22'40"	Forest Land	Tribal
	Chandrapur	Central Chanda					4th Y.O.	20.000	1	20.000	1111 (Model-4) (New)	18696	**4.00**	Rajura	Vihirgon	Nalfadi	179	N19 40'23" E79 26'40"	Forest Land	Tribal
	Chandrapur	Central Chanda					4th Y.O.	20.000	1	20.000	1111 (Model-4) (New)	18696	**4.00**	Rajura	Vihirgon	Vihirgaon	172	N19 43'56,4" E79 26'10'6"	Forest Land	Tribal
	Chandrapur	Central Chanda					4th Y.O.	20.000	1	20.000	1111 (Model-4) (New)	18696	**4.00**	Dhaba	Dhaba	Dhaba	587AB	$N19^{0}36.463"$ $E079^{0}36.947"$	Forest Land	Tribal
	Chandrapur	Central Chanda					4th Y.O.	15.000	1	15.000	1111 (Model-4) (New)	18696	**3.00**	Dhaba	Dhaba	Wedgon	561c	$N19^{0}33.602"$ $E079^{0}34.78"$	Forest Land	Tribal
	Chandrapur	Central Chanda					4th Y.O.	10.000	1	10.000	625 (Model-5) (Old)	18696	**2.00**	Pombhurna	Dewada	Ghanoti 2	57	N19 51 49.1 E79 32 53.4	Forest Land	Tribal
			Total			**121.58**		**175.000**	**10**	**175.000**			**35.01**							
			Total for Central Chanda division					**516.000**	**27**	**516.000**			**103.22**							
			Total 4th Y.O.						**53**	**1260.448**			**247.97**							
7	Chandrapur	Bramhapuri	765 KV DC (Hexa) Raipur Pooling Station to Wardha Transmission Line-2	12360	MoEFF.No.8-92/2014 FCdt. 11/6/2015	295.425	6th Y.O.	18.340	1	18.340	2500 (Model-1) (New)	17845	**3.50**	Nagbhid	Dongergaon	Rengatur	494	N20 41 46.4 E079 36 6.23	Forest Land	Non Tribal
			Total 6th Y.O.					**18.340**	**1**	**18.340**			**3.50**							

Sr. No.	Circle	Division	Name of the Project	Project ID	Final sanction	Area of the Project (ha)	Year of Operation (i.e. SYO, TYO etc.)	Projectwise total area of SYO, TYO etc.	Total No of sites w.r.t. col. 12	Area of maintenance of plantation at each site	Plantation model being used (no. of plants per ha.)	Rate/ ha (Rs)	Amount (Rs. Lakhs)	Details of Area under treatment						
														Range	Round	Beat	Compartment no.	Latlong	Whether forest land or non - forest land	Whether tribal /remote area or non-tribal area
1	2	3	4	5	6	7	8	9	10	11	12	13	14	15	16	17	18	19	20	21
8	Chandrapur	Chandrapur	Construction of 66 Kv-Ehv Ballarshah-Chandrapur Line Dist chandrapur	12043	State GovtFLD3612/ CR-63/F-10 dt. 31/12/2012	1	7th Y.O.	1.000	1	1.000	400	18696	**0.20**	Saoli	Navegao	Navegao	1566	N20 08.840, E79 51.883	Forest Land	Tribal
			Total 7th Y.O.					**1.000**	**1**	**1.000**			**0.20**							
9	Chandrapur	Bramhapuri	765 KV D.C. Raipur Pooling Station to Wardha Transmission Line - 1	12244	MOEFF.No.8-80/2013 FCdt. 21.4. 2014	272.325	8th Y.O.	12.530	1	12.530	2500 (Model-1) (New)	17845	**2.39**	Nagbhid	Dongargaon	Rengatur	494	N20 40 40 E079 37 4	Forest Land	Non Tribal
	Chandrapur	Bramhapuri					8th Y.O.	0.218	1	0.218	400+ 1100	17845	**0.04**	Nagbhid	Dongargaon	Rengatur	272	N20 39 58 E079 36 32		Non Tribal
	Chandrapur	Bramhapuri					8th Y.O.	0.063	1	0.063	400	17845	**0.0120**	Nagbhid	Mendhala	Masli	24	N20 61 578 E079 71 134		Non Tribal
			Total for Bramhapuri division					**12.811**	**3**	**12.811**			**2.45**							
10	Chandrapur	Central Chanda	Construction of Four lane Road in Chandrapur, Warora, bamani and constraction of toll plaza	12177	MOEFNo.6-MH-B003/2013-BHO/852Dt. 22.05.2013	0.80	8th Y.O.	1.600	1	1.600	1111 (Model-3) (Old)	18696	**0.32**	Ballarshah	Ballarshah	Lawari	572	N 19 49.18 E 79 25.36	Forest Land	Tribal
			Total for Central Chanda division			**0.80**		**1.600**	**1**	**1.600**			**0.32**							
11	Chandrapur	Chandrapur	Priyadarshini Kanya Vidhyalay	11530	RegionalNO-6-MHB-179/2008BHO/ 1757dt. 28/10/2013	2	8th Y.O.	2.000	1	2.000	1111 (Model-4) (New)	17845	**0.38**	Saoli	Navegao	Navegao	1566	N20 08.707, E79 51.851	-	Non Tribal
			Total for Chandrapur division			**2.00**		**2.000**	**1**	**2.000**			**0.38**							
			Total 8th Y.O.			**2.80**		**16.411**	**5**	**16.411**			**3.15**							
12	Chandrapur	Chandrapur	Belgaon Under Ground Coal Mine	11454	G.O.I.8-28-2007 FCdt. 2.02.2011	11	9th Y.O.	11.000	1	11.000	400	17845	**2.10**	Warora	Temurda	Kem	33, 34		Forest Land	Non Tribal
			Total 9th Y.O.			**11**		**11.000**	**1**	**11.000**			**2.10**							
			Grand total of Chandrapur circle					**46.751**	**61**	**1307.198**			**256.92**							

Sr. No.	Circle	Division	Name of the Project	Project ID	Final sanction	Area of the Project (ha)	Year of Operation (i.e. SYO, TYO etc.)	Projectwise total area of SYO, TYO etc.	Total No of sites w.r.t. col. 12	Area of maintenance of plantation at each site	Plantation model being used (no. of plants per ha.)	Rate/ ha (Rs)	Amount (Rs. Lakhs)	Details of Area under treatment						
														Range	Round	Beat	Compartment no.	Latlong	Whether forest land or non - forest land	Whether tribal /remote area or non-tribal area
1	2	3	4	5	6	7	8	9	10	11	12	13	14	15	16	17	18	19	20	21
1	Dhule	Jalgaon	Varkhed Londhe Barrage Medium Irrigation Project Jalgaon	12489 (29)	MoEFF.No.fc-I/MH-80/2017-NGP/3697 dt. 06. 04. 2018	85.910	SYO	0.970	1	24.490	1111 (Model-4) (New)	35697	**9.35**	Erandol	Rajwad	Rajwad	1248,	N 21.0149 E 75.2577	Forest Land	Non Tribal
	Dhule	Jalgaon					SYO		1	15.010	1111 (Model-4) (New)	35697	**5.73**	Erandol	Rajwad	Rajwad	1280	N21 00 54.0 E75 15 12.1	Forest Land	Non Tribal
	Dhule	Jalgaon					SYO		1	21.450	1111 (Model-4) (New)	35697	**8.19**	Erandol	Rajwad	Rajwad	1281	N21 00 51.5 E75 15 22.1	Forest Land	Non Tribal
	Dhule	Jalgaon					SYO		1	11.410	1111 (Model-4) (New)	35697	**4.36**	Erandol	Rajwad	Rajwad	1385	N21 00 47.2 E75 15 31.9	Forest Land	Non Tribal
	Dhule	Jalgaon					SYO		1	13.550	1111 (Model-4) (New)	35697	**5.18**	Erandol	Rajwad	Rajwad	1386/1, 1387/1	N21.03231 E75.2476	Forest Land	Non Tribal
	Dhule	Jalgaon				9.040	SYO		1	9.040	1111 (Model-4) (New)	35697	**3.45**	Parola	Amalner	Amalner	G.no. 32/2	N21 00 15.6 E75 10 48.5	Forest Land	Non Tribal
			Total SYO			**94.95**		**0.970**	**6**	**94.950**			**36.27**							
2	Dhule	Dhule	Diversion of 0.97 Ha Reserved Forest Land in favour of M/s Ujjwala Raman Gavit for construction of Petrol Pump at village Songir Tal & Dist Dhule	12489 (29	MoEFF.No.fc-I/MH-80/2017-NGP/3697 dt. 06. 04. 2018	0.97	TYO	0.970	1	0.970	2500 (Model-1) (Old)	34345	**0.36**	Shindkheda	Songir	Songir	Songir Gat No. 38 Village Songir	21.05408 74.47725	Forest Land	Non Tribal
3	Dhule	Dhule	Const. Ichagavan MIT Nandurbar	11949	MoEF6-MHC 023/2013-BHO/4518dt. 25.10.2018	25.77	TYO	25.770	1	25.770	625 (Model-5) (Old)	24530	**6.76**	Kondaibari	Dhaner	Shirsola	Gat No. 83 Satarpada	N21.06.4981 E74.11.2800	Non Forest Land	Non Tribal
			Total TYO			**26.74**		**26.740**	**2**	**26.740**			**7.12**							
4	Dhule	Dhule	Divertion of 3.246 ha. Forest land for 132 KV EHV D/C line at Mhasdale Tal. Sakri, Dist Dhule	12474 (28)	MoEFF.No.fc-i/mh-58/2016-ngp/1920 dt. 13.07.2016	3.246	4th Y.O.	6.500	1	6.500	1600 (Model-2) (Old)	17845	**1.24**	Sakri	Mhasale	Hatti Bk.	Hatti Bk. 350	N21 05 113 E74.47355	Forest Land	Non Tribal
			Total 4th Y.O.					**6.500**	**1**	**6.500**			**1.24**							

Sr. No.	Circle	Division	Name of the Project	Project ID	Final sanction	Area of the Project (ha)	Year of Operation (i.e. SYO, TYO etc.)	Projectwise total area of SYO, TYO etc.	Total No of sites w.r.t. col. 12	Area of maintenance of plantation at each site	Plantation model being used (no. of plants per ha.)	Rate/ ha (Rs)	Amount (Rs. Lakhs)	Details of Area under treatment						
														Range	Round	Beat	Compartment no.	Latlong	Whether forest land or non - forest land	Whether tribal /remote area or non-tribal area
1	2	3	4	5	6	7	8	9	10	11	12	13	14	15	16	17	18	19	20	21
5	Dhule	Dhule	765 KV D/C Dhule to Vadodara Tr. Line from Dhule	12252	MoEF6-MHC-14/2014-BHO/483dt. 19 Nov. 15	17.216	6th Y.O.	17.216	1	17.216	2500 (Model-1) (Old)	17845	**3.29**	Shindkheda	Lamkani	Nimdale	Nimdale 355	N20.58721 E 74.42582	Forest Land	Non Tribal
6	Dhule	Dhule	Diversion of 5.264 ha. Forest land for Construction of New Mordad, Khordad canal	12282	MoEF6-MHC-012/2014-BHO/285dt. 21 Apr. 16	5.264	6th Y.O.	5.264	1	5.264	1600 (Model-2) (Old)	17845	**1.01**	Dhule	Arvi	Purmepada	Purmepada Gut No.182/2 of Village Dhandre	20.686351 74.727344	Non Forest Land	Non Tribal
			Total for Dhule Divison						**2**	**22.480**			**4.29**							
7	Dhule	Jalgaon	O.F.C. line along the road row from Jalgaon to Pachora Road No.184 M/S Bharti Airtel Ltd., New Delhi.	11930	CCF(T) DhuleCCF(T)Dhule's No.D-5/Nodal/C.R.72/10-11/535dt. 03.01.2013	0.060	6th Y.O.	1.000	1	1.000	1111 (Model-3) (Old)	17845	**0.19**	Jalgaon	Vitner	Shirsoli	414	N20 52 35.2 E75 32 09.0	Forest Land	Non Tribal
8	Dhule	Jalgaon	Diversion of forest land Laying Underground OFC from Bhusawal to Jamner Rd. S.H.188 Road with area 0.096 (IDEA)	11715	CCF(T) DhuleCCF(T)Dhule's No.D-5/Nodal/C.R.72/10-11/570dt. 22/3/ 2013	0.096	6th Y.O.	1.000	1	1.000	1111 (Model-3) (Old)	17845	**0.19**	Muktainagar	Bodwad	Salsinghi	513	N20 55 15.7 E75 56 53.8	Forest Land	Non Tribal
9	Dhule	Jalgaon	Diversion of 1.98 forest land construction of Laying underground pipeline & erection of 33 KV electric Line for Water Supply under Kurha-Vadoda-Islampur lift Irrigation Scheme	12051	G.O.I.6-MHB 030/2012-BHO/ 1853dt. 13/11/ 2012	1.980	6th Y.O.	1.980	1	1.980	1111 (Model-3) (Old)	17845	**0.38**	Muktainagar	Godegaon	Velhada	195/1/1	N20 57 58.3 E75 53 31.0	Non Forest Land	Non Tribal
	Dhule	Jalgaon					6th Y.O.	3.960	1	3.960	1111 (Model-3) (Old)	17845	**0.76**	Vadoda	Kurha	W. Kurha	564/xi	N21 03.057 E76 21.107	Forest Land	Non Tribal
	Dhule	Jalgaon					6th Y.O.	2.000	1	2.000	625 (Model-5) (Old)	17845	**0.38**	Vadoda	Kurha	W. Kurha	564/xi	N21 02.59 E76 21.06	Forest Land	Non Tribal
10	Dhule	Jalgaon	Shelgaon Barrage Medium Project	11786	Govt.of India MoEF & CC Conser vator of Forests F.No.6-MHC-25/2009-BHO/ 478 dt. 19/11/15	39.980	6th Y.O.	40.000	1	40.000	625 (Model-5) (Old)	17845	**7.64**	Jamner	Jamner	Pahur	Gat No. 84	N20 42 33.2 E75 46 26.4	Non Forest Land	Non Tribal
	Dhule	Jalgaon					6th Y.O.	40.000	1	40.000	1111 (Model-3) (Old)	17845	**7.64**	Vadoda	Kurha	Kurha E.	563	N21 03.836 E76 38.109	Forest Land	Non Tribal
	Dhule	Jalgaon					6th Y.O.	40.000	1	40.000		17845	**7.64**	Jamner	Godrai	Godri	456	N20 35 39.3 E75 54 53.5	Forest Land	Non Tribal
	Dhule	Jalgaon					6th Y.O.	20.000	1	20.000	625 (Model-5)	17845	**3.82**	Vadoda	Kurha	Rajura	565	N21 03.787 E76 38.109	Forest Land	Non Tribal
			Total for Jalgaon Divison						**9**	**149.940**			**28.63**							
			Total 6th Y.O.			**64.60**		**172.420**	**11**	**172.420**			**32.92**							

Sr. No.	Circle	Division	Name of the Project	Project ID	Final sanction	Area of the Project (ha)	Year of Operation (i.e. SYO, TYO etc.)	Projectwise total area of SYO, TYO etc.	Total No of sites w.r.t. col. 12	Area of maintenance of plantation at each site	Plantation model being used (no. of plants per ha.)	Rate/ ha (Rs)	Amount (Rs. Lakhs)	Details of Area under treatment						
														Range	Round	Beat	Compartment no.	Latlong	Whether forest land or non - forest land	Whether tribal /remote area or non-tribal area
1	2	3	4	5	6	7	8	9	10	11	12	13	14	15	16	17	18	19	20	21
11	Dhule	Yawal	Laying of OFC Chopda To Varla M/S Bharti Airtel Ltd.New Delhi.	12040	APCCFD17/Nodal/2ID/12040/26/1758/13-14dt. 27-12-2013.	**0.228**	7th Y.O.	1.000	1	1.000	400	18696	**0.24**	Yawal	Chopda	lasur	286	N 2131995 E75184313	Forest Land	Tribal
			Total 7th Y.O.					**1.000**	**1**	**1.000**			**0.24**							
12	Dhule	Dhule	200 KV electric line Satana Malegaon	11902	GOI6MHC-025/2011-BHO-987 dt. 20.6. 2013	15.967	8th Y.O.	16.000	1	16.000	400	18696	**3.20**	Pimpalner	Dangshirwada	Dangshirwada	Dangshirwada 215	N20.53.156 E074.03.694	Forest Land	Tribal
13	Dhule	Nandurbar	220 KV electric line satana malegaon	11902	06 MHC-025/2011-BHO-987dt. 20/6/13	15.967	8th Y.O.	15.967	1	14.000	1111 (Model-3) (Old)	18696	**2.80**	Shahada	Shahana	vadgaon	561,562	N21 36 35 E74 42 63	Forest Land	Tribal
14	Dhule	Jalgaon	Waghur River Project	12012	G.O.I.F.No.8-135/ 2009/ FCdt. 21. 12. 2012	78.620	8th Y.O.	55.440	1	55.440	400	17845	**10.59**	Muktainagar	Gole gaon	Velhale	195/1/1	N20 42 33.2 E75 46 26.4	Non Forest Land	Non Tribal
	Dhule	Jalgaon					8th Y.O.	23.180	1	23.180	400	17845	**4.43**	Chalis gaon	Ghode gaon	Upkhed	171, 183, 185	N21 03.836 E76 38.109	Non Forest Land	Non Tribal
			Total for Jalgaon Divison					**78.620**	**2**	**78.620**			**15.01**							
			Total 8th Y.O.			**110.55**		**110.587**	**4**	**108.620**			**21.01**							
15	Dhule	Dhule	Solar Powr Project at Shivaji Nagar	12054	GOIF No.8-04/ 2012-FC dt. 3.8.2012	325	9th Y.O.	45.000	1	45.000	400	17845	**8.59**	Dhule	Arvi	Horpada	Horpada 343	N20.637096 E74.819215	Forest Land	Non Tribal
	Dhule	Dhule					9th Y.O.	50.000	1	50.000	400	17845	**9.55**	Dhule	Dhule	Chitod	Chitod 294	N20.857.028 E74.709.162		Non Tribal
	Dhule	Dhule					9th Y.O.	25.000	1	25.000	400	17845	**4.77**	Dhule	Arvi	Purmepada	Purmepada 326	N20.74642 E74.669786		Non Tribal
	Dhule	Dhule					9th Y.O.	30.000	1	30.000	400	17845	**5.73**	Dhule	Chougaon	Chougaon	Chougaon 262	N20.823961 E74.600111		Non Tribal
	Dhule	Dhule					9th Y.O.	30.000	1	30.000	400	17845	**5.73**	Dhule	Chougaon	Chougaon	Chougaon 262	N20.823911 E74.60038		Non Tribal
	Dhule	Dhule					9th Y.O.	50.000	1	50.000	400	17845	**9.55**	Shindkheda	Lamkani	Lamkani	Lamkani 447	N21.05761 E74.57141		Non Tribal
	Dhule	Dhule					9th Y.O.	50.000	1	50.000	400	17845	**9.55**	Shindkheda	Vadel	Vadel	Vadel 359	N20.983452 E74.711224		Non Tribal

Sr. No.	Circle	Division	Name of the Project	Project ID	Final sanction	Area of the Project (ha)	Year of Operation (i.e. SYO, TYO etc.)	Projectwise total area of SYO, TYO etc.	Total No of sites w.r.t. col. 12	Area of maintenance of plantation at each site	Plantation model being used (no. of plants per ha.)	Rate/ ha (Rs)	Amount (Rs. Lakhs)	Details of Area under treatment						
														Range	Round	Beat	Compartment no.	Latlong	Whether forest land or non - forest land	Whether tribal /remote area or non-tribal area
1	2	3	4	5	6	7	8	9	10	11	12	13	14	15	16	17	18	19	20	21
16	Dhule	Dhule	Solar Powr Project at Shivaji Nagar	12054	GOIF No.8-04/ 2012-FC dt. 3.8.2012	325	9th Y.O.	50.000	1	50.000	400	17845	**9.55**	Shindkheda	Dondaicha	Salve	Salve G.N.307	N21.206995 E74.584779		Non Tribal
	Dhule	Dhule					9th Y.O.	20.000	1	20.000	400	17845	**3.82**	Sakri	Vardhane	Mahir	Mahir 402	N 20 58 25 E 074 26 44		Non Tribal
	Dhule	Dhule					9th Y.O.	25.000	1	25.000	400	17845	**4.77**	Sakri	Vardhane	Ubhand	Ubhand 410	N 21.01791 E74.25668		Non Tribal
	Dhule	Dhule					9th Y.O.	35.000	1	35.000	400	17845	**6.68**	Sakri	Mahsale	Hatti	Hatti 351	N 21 05 986 E074 47 028		Non Tribal
	Dhule	Dhule					9th Y.O.	25.000	1	25.000	400	17845	**4.77**	Sakri	Vardhane	Vardhane	Vardhane 412	N 21.0433 E 074.25496		Non Tribal
	Dhule	Dhule					9th Y.O.	35.000	1	35.000	400	18696	**7.00**	Pimpalner	Pimpalaner	Pimpalner	Pimpalner 377	N20.57.448 E074.05.286	Forest Land	Tribal
	Dhule	Dhule					9th Y.O.	20.000	1	20.000	400	18696	**4.00**	Pimpalner	Dighave	Umarpata2	Umarpata2 86/2A, 70/1	N20.50795 E74.21877	Forest Land	Tribal
	Dhule	Dhule					9th Y.O.	50.000	1	50.000	400	18696	**10.00**	Pimpalner	Mhasadi	Behed	Behed 240	N20 51813 E74 24455	Forest Land	Tribal
	Dhule	Dhule					9th Y.O.	40.000	1	40.000	400	18696	**8.00**	Kondaibari	Kondaibari	Vitave	Vitave 146	N21.221951 E74.195275	Forest Land	Tribal
	Dhule	Dhule					9th Y.O.	40.000	1	40.000	400	18696	**8.00**	Kondaibari	Bramhanve l	Jambhora	Jambhora 365	N21.107847 E74.185480	Forest Land	Tribal
	Dhule	Dhule					9th Y.O.	30.000	1	30.000	400	18696	**6.00**	Kondaibari	Dhaner	Dhaner	Dhaner 177	N21.092361 E74.080088	Forest Land	Tribal
17	Dhule	Dhule	Wind power project chakhale	11615	GOIF No.8-14/ -FCdt. 6.4.10	90.99	9th Y.O.	14.830	1	4.870	400	17845	**0.93**	Shinkheda	Dondaicha	Karle	Karle G.N. 306 to 311	N21.11819 E74.33804	Non Forest Land	Non Tribal
	Dhule	Dhule					9th Y.O.		1	9.960	400	17845	**1.90**	Shinkheda	Dondaicha	Karle	Karle	N21.18949 E74.536434		Non Tribal
	Dhule	Yawal	Jondhan Kheda M I Tank	11448	G.O.I F.No8-288/1988 FC dt. 5/4/2012	18.40	9th Y.O.	18.400	1	18.400	400	18696	**3.68**	Yawal	Raver	Sahstrling	288	N21354832 E75913173	Non Forest Land	Tribal
			Total 9th Y.O.			**759.39**		**683.230**	**21**	**673.270**			**132.58**							

Sr. No.	Circle	Division	Name of the Project	Project ID	Final sanction	Area of the Project (ha)	Year of Operation (i.e. SYO, TYO etc.)	Projectwise total area of SYO, TYO etc.	Total No of sites w.r.t. col. 12	Area of maintenance of plantation at each site	Plantation model being used (no. of plants per ha.)	Rate/ ha (Rs)	Amount (Rs. Lakhs)	Details of Area under treatment						
														Range	Round	Beat	Compartment no.	Latlong	Whether forest land or non - forest land	Whether tribal /remote area or non-tribal area
1	2	3	4	5	6	7	8	9	10	11	12	13	14	15	16	17	18	19	20	21
	Dhule	Jalgaon	Kang River Project	2140	G.O.I.F No.R-15/99-FC dt. 30-1-2009	144.400	10th Y.O.	32.540	1	32.540	400+ 1100	6864	**2.39**	Jamner	Jamner	Pahur	148 to 152	N21 03.787 E76 38.109	Non Forest Land	Non Tribal
			Total 10th Y.O.					**32.540**	**1**	**32.540**			**2.39**							
			Grand total of Dhule circle			**1204.10**		**1033.987**	**47**	**1116.040**			**233.78**							
1	Gadchiroli	Sironcha	Diversion of 10.2398 ha. forest land for left side flood bank along the Godavari River towords upstream of barrage to avoid submergence of the at village aaipeta and tumnoor Tal. Gadchiroli Dist.	12715	Regional APCCF of Government of IndiaF. No.FC-II/MH-107/2019-Nag/5382 date 10-06-2019	10.24	SYO	10.580	1	5.990	1111 (Model - 5) (New)	78214	**5.01**	Sironcha	Wardham	Wardham1/ Nandigao	121/2,122/2,125/1,125/2,125/3,126& 39/2,40	N-18 44 25 E-80 04 05	Forest Land	Tribal
	Gadchiroli	Sironcha					SYO		1	4.250	1111 (Model - 5) (New)	78214	**3.56**	Sironcha	Sironcha2	Nandigao/ Wardham	39/2,40 & 121/2,122/2,125/1,125/2,125/3,126& 39/2,40	N-18 50 24 E-80 00 45	Forest Land	Tribal
			Total SYO					**10.580**	**2**	**10.240**			**8.57**							
1	Gadchiroli	Wadsa	764 KV DC Raipur pooling station (chattisgarh)-wardha(Maharashtra Transmission line II over an area of 295.425 ha. (Wadsa dn. 253.729 ha.)	12360	GOIF.No.8-92/2014-FCdt. 7.12.2014	253.729	4th Y.O.	25.000	1	25.000	1111 (Model-4) (New)	18696	**5.00**	Porla	Porla	Sakhara	4 B	N-20.16.32.30 E-80.0.19.14	Forest Land	Tribal
2	Gadchiroli	Wadsa					4th Y.O.	30.000	1	30.000		18696	**6.00**	Porla	Porla	Sakhara	5	N-20.17.19.34 E-80.0.23.99	Forest Land	Tribal
3	Gadchiroli	Wadsa					4th Y.O.	10.000	1	10.000		18696	**2.00**	Wadsa	Shivarajpur	Shivarajpur	853	N- 20°58'11" E- 80°00'02"	Forest Land	Tribal
4	Gadchiroli	Wadsa					4th Y.O.	20.000	1	20.000		18696	**4.00**	Wadsa	Wadsa	Wadsa	866	N- 20°59'06" E- 79°97'71"	Forest Land	Tribal
5	Gadchiroli	Wadsa					4th Y.O.	15.000	1	15.000		18696	**3.00**	Armori	Palasagaon	Jogisakhara	766	N 20 29 37.70 E80 02 21.30	Forest Land	Tribal
6	Gadchiroli	Wadsa					4th Y.O.	25.000	1	25.000		18696	**5.00**	Armori	Armori	Armori	712	N 20 26 31.60 E80 07 53.70	Forest Land	Tribal
7	Gadchiroli	Wadsa					4th Y.O.	20.000	1	20.000		18696	**4.00**	Armori	Vairagad	Sukala	711	N 20 26 11.20 E80 07 09.00	Forest Land	Tribal
8	Gadchiroli	Wadsa					4th Y.O.	20.000	1	20.000		18696	**4.00**	Armori	Palasagaon	Jogisakhara	71	N 20 29 57.30 E80 02 26.50	Forest Land	Tribal
9	Gadchiroli	Wadsa					4th Y.O.	20.000	1	20.000		18696	**4.00**	Armori	Armori	Armori	67	N 20 3026.050 E79 57 53.40	Forest Land	Tribal
10	Gadchiroli	Wadsa					4th Y.O.	25.000	1	25.000		18696	**5.00**	Armori	Vairagad	Vairagad	743	N 20 25 52.20 E80 25 52.20	Forest Land	Tribal
			Total 4th Y.O.					**210.000**	**10**	**210.000**			**42.01**							

Sr. No.	Circle	Division	Name of the Project	Project ID	Final sanction	Area of the Project (ha)	Year of Operation (i.e. SYO, TYO etc.)	Projectwise total area of SYO, TYO etc.	Total No of sites w.r.t. col. 12	Area of maintenance of plantation at each site	Plantation model being used (no. of plants per ha.)	Rate/ ha (Rs)	Amount (Rs. Lakhs)	Details of Area under treatment						
														Range	Round	Beat	Compartment no.	Latlong	Whether forest land or non - forest land	Whether tribal /remote area or non-tribal area
1	2	3	4	5	6	7	8	9	10	11	12	13	14	15	16	17	18	19	20	21
1	Gadchiroli	Wadsa	765 KV DC Raipur pulling Station-Chattisgarh-Wardha Transmission line-II	12360	GOIF.NO.8-92/2014-FCdt. 1.12.2015	253.729 ha	5th Y.O.	25.000	1	25.000	1111 (Model-4) (New)	18696	**5.00**	Kurkheda	Kurkheda	Wadegaon	148	N20 40.328 E80 11.170	Forest Land	Tribal
2	Gadchiroli	Wadsa					5th Y.O.	25.000	1	25.000		18696	**5.00**	Kurkheda	Kurkheda	Wadegaon	949	N20 39.333 E80 11.521	Forest Land	Tribal
3	Gadchiroli	Wadsa					5th Y.O.	25.000	1	25.000		18696	**5.00**	Kurkheda	Kurkheda	Kurkheda	992	N20 38.023 E80 14.371	Forest Land	Tribal
4	Gadchiroli	Wadsa					5th Y.O.	25.000	1	25.000		18696	**5.00**	Kurkheda	Kurkheda	Jambhulkheda	200	N20 36.203 E80 14.549	Forest Land	Tribal
			Total 5th Y.O.					**100.000**	**4**	**100.000**			**20.00**							
1	Gachiroli	Wadsa	765 KV DC Raipur pooling station (chattisgarh)-wardha (Maharashtra Transmission Line - II over an area of 295.425 ha. (Wadsa Dn. 253.729 ha.)	12360	GOIF.No.8-92/2014-FCdt. 7.12.2015	253.729 ha.	6th Y.O.	30.000	1	30.000	1111 (Model-4) (New)	18696	**6.00**	Porla	Porla	Porla	6	N-20.17.47 E-79.59.56	Forest Land	Tribal
2	Gachiroli	Wadsa					6th Y.O.	20.000	1	20.000	1111 (Model-4) (New)	18696	**4.00**	Porla	Porla	Porla	6	N-20.17.36 E-80.0.12	Forest Land	Tribal
3	Gachiroli	Wadsa					6th Y.O.	25.000	1	25.000	1111 (Model-4) (New)	18696	**5.00**	Porla	Shirshi	Darli	63	N-20.21.18.19 E-80.05.46.06	Forest Land	Tribal
4	Gachiroli	Wadsa					6th Y.O.	15.000	1	15.000	1111 (Model-4) (New)	18696	**3.00**	Kurkheda	Kurkheda	Wadegaon	147	N20 40.311 E80 10.60	Forest Land	Tribal
5	Gachiroli	Wadsa					6th Y.O.	35.000	1	35.000	625 (Model-5) (Old)	18696	**7.00**	Kurkheda	Kurkheda	Wadegaon	147	N20 40.601 E80 09.59	Forest Land	Tribal
6	Gachiroli	Wadsa					6th Y.O.	15.000	1	15.000	1111 (Model-4) (New)	18696	**3.00**	Kurkheda	Kurkheda	Mohgaon	168	N20 38.321 E80 14.558	Forest Land	Tribal
7	Gachiroli	Wadsa					6th Y.O.	15.000	1	15.000	1111 (Model-4) (New)	18696	**3.00**	Kurkheda	Kurkheda	Chikhali	958	N20 64.074 E80 17.142	Forest Land	Tribal
8	Gachiroli	Wadsa					6th Y.O.	25.000	1	25.000	1111 (Model-4) (New)	18696	**5.00**	Kurkheda	Kurkheda	Chikhali	943	N20 64.019 E80 16.145	Forest Land	Tribal
9	Gachiroli	Wadsa					6th Y.O.	17.458	1	17.458	1111 (Model-4) (New)	18696	**3.49**	Kurkheda	Kurkheda	Chikhali	943	N20 64.794 E80 17.156	Forest Land	Tribal
			Total 6th Y.O.					**197.458**	**9**	**197.458**			**39.50**							

Sr. No.	Circle	Division	Name of the Project	Project ID	Final sanction	Area of the Project (ha)	Year of Operation (i.e. SYO, TYO etc.)	Projectwise total area of SYO, TYO etc.	Total No of sites w.r.t. col. 12	Area of maintenance of plantation at each site	Plantation model being used (no. of plants per ha.)	Rate/ ha (Rs)	Amount (Rs. Lakhs)	Details of Area under treatment						
														Range	Round	Beat	Compartment no.	Latlong	Whether forest land or non - forest land	Whether tribal /remote area or non-tribal area
1	2	3	4	5	6	7	8	9	10	11	12	13	14	15	16	17	18	19	20	21
10	Gadchiroli	Wadsa	765 KV DC line Raipur pulling Station-I (Chhatisgarh) Wardha Transmission lin in Gadchiroli, Chandrapur, Gondia Distt in favour of power Grid Corporation	1938	G.O.I.F No.8-80/2013/ FCdt. 21.4.14	272.325	7th Y.O.	30.000	1	30.000	1111 (Model-4) (New)	18696	**6.00**	Wadsa	Wadsa	Shivrajpur	869	N- 20°36'14" E- 79°59'01"	Forest Land	Tribal
11	Gadchiroli	Wadsa					7th Y.O.	15.000	1	15.000	1111 (Model-4) (New)	18696	**3.00**	Wadsa	Wadsa	Wadegaon	878, 879	N- 20°39'19" E- 79°58'53"	Forest Land	Tribal
12	Gadchiroli	Wadsa					7th Y.O.	16.000	1	16.000	1111 (Model-4) (New)	18696	**3.20**	Wadsa	Vihirgaon	Pimpalgaon	121	N- 20°35'16" E- 80°04'57"	Forest Land	Tribal
13	Gadchiroli	Wadsa					7th Y.O.	50.000	1	50.000	1111 (Model-4) (New)	18696	**10.00**	Porla	Porla	Porla	6	N-20.18.27.46 E-79.59.23.50	Forest Land	Tribal
14	Gadchiroli	Wadsa					7th Y.O.	25.000	1	25.000	1111 (Model-4) (New)	18696	**5.00**	Porla	Porla	Sakhra	5	N-20.17.36.04 E-79.59.41.31	Forest Land	Tribal
15	Gadchiroli	Wadsa					7th Y.O.	30.000	1	30.000	1111 (Model-4) (New)	18696	**6.00**	Porla	Maregaon	Deloda	10	N-20.18.17.49 E-80.03.42.09	Forest Land	Tribal
16	Gadchiroli	Wadsa					7th Y.O.	35.000	1	35.000	1111 (Model-4) (New)	18696	**7.00**	Porla	Porla	Porla	12	N-20.19.26.83 E-79.59.49.14	Forest Land	Tribal
17	Gadchiroli	Wadsa					7th Y.O.	30.000	1	30.000	1111 (Model-4) (New)	18696	**6.00**	Porla	Porla	Sakhra	4	N-20.15.53.97 E-80.0.15.72	Forest Land	Tribal
18	Gadchiroli	Wadsa					7th Y.O.	25.000	1	25.000	1111 (Model-4) (New)	18696	**5.00**	Porla	Maregaon	Moushikhamb	644	N-20.18.4.73 E-80.3.33.66	Forest Land	Tribal
19	Gadchiroli	Wadsa					7th Y.O.	25.000	1	25.000	1111 (Model-4) (New)	18696	**5.00**	Armori	Armori	Wasala	751	N 20 44 15.35 E80 02 29.94	Forest Land	Tribal
20	Gadchiroli	Wadsa					7th Y.O.	25.000	1	25.000	1111 (Model-4) (New)	18696	**5.00**	Armori	Armori	Armori	67	N 20 29 59.04 E 79 58 60.52	Forest Land	Tribal
21	Gadchiroli	Wadsa					7th Y.O.	35.000	1	35.000	1111 (Model-4) (New)	18696	**7.00**	Armori	Palasgaon	Jogisakhra	71	N 20 50 23.09 E80 05 68.99	Forest Land	Tribal
22	Gadchiroli	Wadsa					7th Y.O.	10.000	1	10.000	1111 (Model-4) (New)	18696	**2.00**	Armori	Armori	Injewari	798	N 20 52 38.51 E 79 59 30.27	Forest Land	Tribal
			Total 7th Y.O.					**351.000**	**13**	**351.000**			**70.22**							

Sr. No.	Circle	Division	Name of the Project	Project ID	Final sanction	Area of the Project (ha)	Year of Operation (i.e. SYO, TYO etc.)	Projectwise total area of SYO, TYO etc.	Total No of sites w.r.t. col. 12	Area of maintenance of plantation at each site	Plantation model being used (no. of plants per ha.)	Rate/ ha (Rs)	Amount (Rs. Lakhs)	Details of Area under treatment						
														Range	Round	Beat	Compartment no.	Latlong	Whether forest land or non - forest land	Whether tribal /remote area or non-tribal area
1	2	3	4	5	6	7	8	9	10	11	12	13	14	15	16	17	18	19	20	21
23	Gadchiroli	Wadsa	Diversion of 272.325 ha of forest land for construction of 765 KV DC Transmission line-II from Raipur Wardha in Gadchiroli, Chandrapur, Gondia Dist in favour of power Grid Corporation	12244	GOIF No.8-80/ 2013/ FCdt. 21-4-14	272.325 (Wadsa Dn. 249.437)	8th Y.O.	35.000	1	35.000	1111 (Model-4) (New)	18696	**7.00**	Delanwadi	Sonsari	Sonsari	276 Sonsari	N-20° 32' 385" E-80° 13 '697"	Forest Land	Tribal
24	Gadchiroli	Wadsa					8th Y.O.	20.000	1	20.000	1111 (Model-4) (New)	18696	**4.00**	Delanwadi	Sonsari	Sonsari	273 Mendha	N-20° 29' 797" E-80° 14 '250"	Forest Land	Tribal
25	Gadchiroli	Wadsa					8th Y.O.	30.000	1	30.000	1111 (Model-4) (New)	18696	**6.00**	Wadsa	Wadsa	Shivrajpur	870 Nainpur	N- 20°36'34" E-79°58'00"	Forest Land	Tribal
26	Gadchiroli	Wadsa					8th Y.O.	1.000	1	1.000	1111 (Model-4) (New)	18696	**0.20**	Wadsa	Wadsa	Shivrajpur	855 Nainpur	N- 20°39'19" E- 79°58'53"	Forest Land	Tribal
27	Gadchiroli	Wadsa					8th Y.O.	8.000	1	8.000	1111 (Model-4) (New)	18696	**1.60**	Wadsa	Wadsa	Shivrajpur	853 Nainpur	N- 20°34'39" E- 80°00'21"	Forest Land	Tribal
28	Gadchiroli	Wadsa					8th Y.O.	4.000	1	4.000	1111 (Model-4) (New)	18696	**0.80**	Wadsa	Wadsa	Shivrajpur	812 Kondhala	N- 20°57'67" E- 79°98'48"	Forest Land	Tribal
29	Gadchiroli	Wadsa					8th Y.O.	1.000	1	1.000	1111 (Model-4) (New)	18696	**0.20**	Wadsa	Wadsa	Shivrajpur	864 Wadegaon Rit	N- 20°57'68" E- 79°98'45"	Forest Land	Tribal
30	Gadchiroli	Wadsa					8th Y.O.	25.000	1	25.000	1111 (Model-4) (New)	18696	**5.00**	Porla	Shirshi	Shirshi	62 Ganeshpur	N-20.21.30.07 E-80.3.56.82	Forest Land	Tribal
31	Gadchiroli	Wadsa					8th Y.O.	25.000	1	25.000	1111 (Model-4) (New)	18696	**5.00**	Porla	Churc-hura	Churchura	3 Churchura	N-20.16.1.59 E-80.2.54.01	Forest Land	Tribal
			Total 8th Y.O.					**149.000**	**9**	**149.000**			**29.81**							
32	Gadchiroli	Allapalli	11 K.V. Transmission Line Allapalli to Talwada	11963	State Govt.6-MHB-022/2011-BHO-194, dt. 6.12.12	2.52	9th Y.O.	5.000	1	5.000	400+ 1100	6864	**0.37**	Chamorshi	Jamgiri	Jamgiri	536	N 19◦50'8" E 79◦53'5"	Forest Land	Tribal
33	Gadchiroli	Bhamragad	Gopani Iron and Power India Limited	11646	GOI6-MHB-112/2008-BHO-1753 dt. 10.7.09	0.24	9th Y.O.	1.000	1	1.000	400	0	**0.00**	Etapalli	Etapalli	Todasa	373	E-19.38.08.20 N-80.16.08.63	Forest Land	Tribal
34	Gadchiroli	Gadchiroli	CCF Office Gadchiroli	11945	Gov.of IndiaNo.6-MHC010/2011-BHO/265dt. 09.02.2012	10.64	9th Y.O.	22.000	1	22.000	400	0	**0.00**	Gadchiroli	Gadchiroli	Gulrwal	182	N-20.140164 E- 80.75168	Forest Land	Tribal

Sr. No.	Circle	Division	Name of the Project	Project ID	Final sanction	Area of the Project (ha)	Year of Operation (i.e. SYO, TYO etc.)	Projectwise total area of SYO, TYO etc.	Total No of sites w.r.t. col. 12	Area of maintenance of plantation at each site	Plantation model being used (no. of plants per ha.)	Rate/ ha (Rs)	Amount (Rs. Lakhs)	Details of Area under treatment						
														Range	Round	Beat	Compartment no.	Latlong	Whether forest land or non - forest land	Whether tribal /remote area or non-tribal area
1	2	3	4	5	6	7	8	9	10	11	12	13	14	15	16	17	18	19	20	21
35	Gadchiroli	Wadsa	Potgaon Water Supply scheme	11373	GOMFLD-36A/07/CR252/F-10dt. 17.11.09	0.217	9th Y.O.	2.000	1	2.000	400+ 1100	6864	**0.15**	Delanwadi	Sonsari	Sonsari	1101	20° 31' 31" 80° 16 '5"	Forest Land	Tribal
36	Gadchiroli	Wadsa	OFC Line Sakhara-Armori-Wadsa-Bodadha	11594	CCFDesk-2(8)/Land/5914 dt. 28.12.10	0.428	9th Y.O.	1.750	1	1.750	400+ 1100	6864	**0.13**	Delanwadi	Sonsari	Sonsari	1101	20° 31' 30" 80° 16 '7"	Forest Land	Tribal
37	Gadchiroli	Wadsa	OFC Line Kadholi-Waigagad-Rangi-Sawangi	11732	CCFDesk-2(8)/Land/5913 dt. 28.12.10	0.208	9th Y.O.	2.000	1	2.000	400+ 1100	6864	**0.15**	Delanwadi	Sonsari	Sonsari	1101	20° 31' 29" 80° 16 '10"	Forest Land	Tribal
38	Gadchiroli	Wadsa	Yengalkheda NMI Tank	2452	GOIF No 8B-26/2001/FCdt. 16.7.08	109.48	9th Y.O.	5.000	1	5.000	400+ 1100	6864	**0.37**	Delanwadi	Sonsari	Sonsari	1101	20° 31' 27" 80° 16 '14"	Forest Land	Tribal
39	Gadchiroli	Wadsa	Kosari MI Tank	2433	GOIF No 8-25/2001/FCWdt. 20.8.08	102.56	9th Y.O.	5.000	1	5.000	400+ 1100	6864	**0.37**	Delanwadi	Sonsari	Sonsari	1101	20° 31' 45" 80° 16 '15"	Forest Land	Tribal
			Total 9th Y.O.					**43.750**	**8**	**43.750**			**1.52**							
			Grand total of Gadchiroli Cirlce					**1061.788**	**55**	**1061.448**			**211.63**							
1	Kolhapur	Sangali	Shipur Dongarwadi Canal		6 MHB/BHO/DT dt. 25.7.16	1.737	5th Y.O.	1.740	1	1.740	625 (Model-5) (Old)	17845	**0.33**	Sangli	Bhose	Shipur		N.16 89 05.7 E.74 81 63.29	Forest Land	Non Tribal
			Total 5th Y.O.			**1.737**		**1.740**	**1**	**1.740**			**0.33**							
2	Kolhapur	Satara	Veloshi to Sitamai Ghat Road	12180	Regional APCCF of GOI6 MHBC-24/2013- BHO 162dt. 10/7/2015	8.54	6th Y.O.	8.540	1	8.540	400 (Model 400+1100)	6864	**0.63**	Phaltan	Phaltan	Dalvadi	G.No.171	N17.54'72 E74 31 53	Non Forest Land	Non Tribal
3	Kolhapur	Satara	Six laning OF pune-Satara Road NH 4	12269	Regional APCCF of GOI6 MHC-37/2014- BHO 385dt. 10/19/2015	13.48	6th Y.O.	27.000	1	27.000	625 (Model-5) (Old)	17845	**5.16**	Khandala	Lonand	Lonand	794	N 18.0545 E 74 01 35	Forest Land	Non Tribal
4	Kolhapur	Satara	Construction of main Canal Nira Devghar project (Bholi Kalva)	11452	G.O.I8-76/ 1995-FC(PT)dt. 22.02.2016	1.98	6th Y.O.	3.960	1	3.960	400 (Model 400+1100)	6864	**0.29**	Khandala	Lonand	Lonand	Shekh mirwadi F.C.No 794	N 18.0537 E 74 01 47	Forest Land	Non Tribal
			Total 6th Y.O.			**24.00**		**39.500**	**3**	**39.500**			**6.07**							

Sr. No.	Circle	Division	Name of the Project	Project ID	Final sanction	Area of the Project (ha)	Year of Operation (i.e. SYO, TYO etc.)	Projectwise total area of SYO, TYO etc.	Total No of sites w.r.t. col. 12	Area of maintenance of plantation at each site	Plantation model being used (no. of plants per ha.)	Rate/ ha (Rs)	Amount (Rs. Lakhs)	Details of Area under treatment						
														Range	Round	Beat	Compartment no.	Latlong	Whether forest land or non - forest land	Whether tribal /remote area or non-tribal area
1	2	3	4	5	6	7	8	9	10	11	12	13	14	15	16	17	18	19	20	21
5	Kolhapur	Kolhapur	Isapur-Chokul Road of Isapur	12059	APCCF of GOINo.6-MHV16/2012-BHO /1644dt. 23.09.2014	4.32	7th Y.O.	4.320	1	4.320	400 (Model 400+1100)	6864	**0.32**	Pendakhale	Y.Jugai	Vishalga	G.No.74a	N.73°47'28.93 E.16°54'742"	Non Forest Land	Non Tribal
			Total for Kolhapur Divison			**4.32**		**4.320**	**1**	**4.320**			**0.32**							
6	Kolhapur	Satara	33 KVTr Line Wind Power Project Rameshwar	11775	APCCF OF GOI6 MHV 013/BhO 2617dt. 14.2.2011	4.21	7th Y.O.	4.210	1	4.210	1111 (Model-3) (Old)	17845	**0.80**	Vaduj	Puseg av	Visapu r	jamb G.No492	N 17 37 41 E 74 17 21	Non Forest Land	Non Tribal
			Total for Satara Divison			**4.21**		**4.210**	**1**	**4.210**			**0.80**							
			Total 7th Y.O.			**8.53**		**8.530**	**2**	**8.530**			**1.12**							
7	Kolhapur	Kolhapur	Dhanpur M.I.Project	11662	MOEF6MHC/010/ 2009/ 489 dt. 19.3.10	30	8th Y.O.	30.000	1	15.340	625 (Model-5) (Old)	17845	**2.93**	Panhala	Panhala	Manwad	G.No.234	N.74°11'22.36 E.16°44'19.89	Non Forest Land	Non Tribal
	Kolhapur	Kolhapur					8th Y.O.		1	14.660	625 (Model-5) (Old)	17845	**2.80**	Panhala	Panhala	Manwad	G.No83,	N.74°31.33" E.16°40'28.08"		Non Tribal
			Total			**30**		**30.000**	**1**	**30.000**			**5.73**							
8	Kolhapur	Kolhapur	Pimprane M I project (Nandurbar Dhule)	2731	MOEF8C/13/2002-FCW/ 5 57 dt. 26.3.13	17.12	8th Y.O.	17.120	1	16.700	400 (Model 400+1100)	6864	**1.23**	Gagan bavada	Gagan bavada	Vesarde	G.No 70	N.73°5'444.9" E.16°'2'1785"	Non Forest Land	Non Tribal
	Kolhapur	Kolhapur					8th Y.O.		1	0.420	625 (Model-5) (Old)	17845	**0.08**	Panhala	Manwad	Kolik	G.No 147	N.73°5'211.39" E.16°41'38.8"		Non Tribal
			Total			**17.12**		**17.120**	**2**	**17.120**			**1.31**							
9	Kolhapur	Kolhapur	Hasur Budruk P.T.	11729	MOEF6NH/2/2011 BHO 690dt. 25.3. 14	1.86	8th Y.O.	1.860	1	1.860	625 (Model-5) (Old)	17845	**0.36**	Pendakhale	Pendakhale	Y.Jugai	J.S.N o.17	N.73°47'19.05" E.16°51'15.35"		Non Tribal
10	Kolhapur	Kolhapur	Dhamani M.I.Project	11562	MOEFFno.847/ 2008 FCW /1552 dt. 16.9.12	104	8th Y.O.	104.000	1	11.260	625 (Model-5) (Old)	17845	**2.15**	Radhanagari	Sarvade	Manbet	G.N..148,129	N.74°4'27.75" E.16°2'21.68		Non Tribal
	Kolhapur	Kolhapur					8th Y.O.		1	28.280		17845	**5.40**	Radhanagari	Sarvade	Manbet	Gat No.14128,126	N.74°52'27.0 E. 16°263'675"		Non Tribal
	Kolhapur	Kolhapur					8th Y.O.		1	14.150		17845	**2.70**	Radhanagari	Sarvade	Manbet	G.N.127, 150	N.74°3'32.13" E.16°25'51.7"		Non Tribal
	Kolhapur	Kolhapur					8th Y.O.		1	26.970		17845	**5.15**	Radhanagari	Sarvade	Manbet	G.N..125,117,118p, 120	N.74°9'5.84" E.16°29'42.83"		Non Tribal
	Kolhapur	Kolhapur					8th Y.O.		1	25.880		17845	**4.94**	Radhanagari	Sarvade	Manbet	G.N.122 123,124	N.74°546'85" E.16°28'13.95"		Non Tribal
			Total			**105.86**		**105.860**	**6**	**106.540**			**20.34**							
			Total for Kolhapur Divison			**152.98**		**154.840**	**10**	**155.520**			**27.73**							

Sr. No.	Circle	Division	Name of the Project	Project ID	Final sanction	Area of the Project (ha)	Year of Operation (i.e. SYO, TYO etc.)	Projectwise total area of SYO, TYO etc.	Total No of sites w.r.t. col. 12	Area of maintenance of plantation at each site	Plantation model being used (no. of plants per ha.)	Rate/ ha (Rs)	Amount (Rs. Lakhs)	Details of Area under treatment						
														Range	Round	Beat	Compartment no.	Latlong	Whether forest land or non - forest land	Whether tribal /remote area or non-tribal area
1	2	3	4	5	6	7	8	9	10	11	12	13	14	15	16	17	18	19	20	21
11	Kolhapur	Satara	Approach road Sangvi to Factorty	11590	APCCF OF GOI6MHB/065 /2011/BHO/331 4dt. 29.6.11	0.0708	8th Y.O.	0.100	1	0.100	1111 (Model-3) (Old)	17845	**0.02**	Khandala	Khandala	Shirval	394	N 18 06 02 E 73 59 03	Non Forest Land	Non Tribal
12	Kolhapur	Satara	Khanapur wind power project	11965	APCCF OF GOI6MHB/028 /2011/BHO/346 dt. 28.2.12	38.053	8th Y.O.	38.053	1	2.930	1111 (Model-3) (Old)	17845	**0.56**	Dahiwadi	Mhaswad	Mhaswad	56,58	N 17 42 856 E 74 51 761	Non Forest Land	Non Tribal
13	Kolhapur	Satara					8th Y.O.		1	24.380	1111 (Model-3) (Old)	17845	**4.66**	Dahiwadi	Dahiwadi	Mardi	169,170	N 17 44 642 E 74 48 330	Non Forest Land	Non Tribal
14	Kolhapur	Satara					8th Y.O.		1	10.740	1111 (Model-3) (Old)	17845	**2.05**	Dahiwadi	Dahiwadi	Mardi	221,222	N 17 43 454 E 74 50 266	Non Forest Land	Non Tribal
15	Kolhapur	Satara	Hindu Cemetary at Mahableshwar	11817	APCCF OF GOI6MHB/007 /2011/BHO/295 6dt. 27.4.11	0.926	8th Y.O.	0.926	1	2.000	625 (Model-5) (Old)	17845	**0.38**	Mahablesh war	Gureghar	Bhilar	68	N 17 54 30 E 73 44 41	Forest Land	Non Tribal
			Total for Satara Divison			**39.05**		**39.079**	**5**	**40.150**			**7.67**							
			Total 8th Y.O.					**193.919**	**15**	**195.670**			**35.40**							
16	Kolhapur	Kolhapur	Pawangad-Jotiba Aerial Ropeway Project	12010	6/MHB/ CB 5/2012/ BHO/1381 dt. 24.8.12	0.09	9th Y.O.	0.090	1	1.800	400 (Model 400+1100)	6864	**0.13**	Panala	Panhala	Rakshi	j S NO 246	N.74°10'1892" E.16°46'21.65"	Forest Land	Non Tribal
17	Kolhapur	Kolhapur	Chir.Sri.Gandhipti Ganadharcharya Kunth usagarVidhya shodh sansthan	11564	MOEFNo.6/MHB/ 147/2007 BHO 1776 dt. 11.8.12	1.08	9th Y.O.	1.080	1	4.800	400 (Model 400+1100)	6864	**0.35**	Gagan Bavada	Gagan Bavada	Palsambe	G.No.99	N.73°5'24.17" E.16°34'55.07"	Non Forest Land	Non Tribal
18	Kolhapur	Kolhapur	Harimahu Minor Irrigation Tank(Dhule Dist.)				9th Y.O.	27.000	1	22.000	400 (Model 400+1100)	6864	**1.62**	Panhala	Panhala	Ponbare	G.No.70,73	N.73°59'53.06 E.16°40'56.12"	Non Forest Land	Non Tribal
			Total for Kolhapur Divison			**1.17**		**28.170**	**3**	**28.600**			**2.10**							
19	Kolhapur	Satara	Wind power project Tr. Line road Rameshwar	11910	MOEF6-MHB-064/ 2010/BHO/ 3815 dt. 30.9.11	2.85	9th Y.O.	2.850	1	1.000	400 (Model 400+1100)	6864	**0.07**	Waduj	Mayani	Keledhone	Taraswadi G.No. 373	N 17 26 38 47 E 74 41 37 60	Non Forest Land	Non Tribal
			Total for Satara Divison			**2.85**		**2.850**	**1**	**1.000**			**0.07**							
			Total 9th Y.O.			**4.02**		**31.020**	**4**	**29.600**			**2.17**							

Sr. No.	Circle	Division	Name of the Project	Project ID	Final sanction	Area of the Project (ha)	Year of Operation (i.e. SYO, TYO etc.)	Projectwise total area of SYO, TYO etc.	Total No of sites w.r.t. col. 12	Area of maintenance of plantation at each site	Plantation model being used (no. of plants per ha.)	Rate/ ha (Rs)	Amount (Rs. Lakhs)	Details of Area under treatment						
														Range	Round	Beat	Compartment no.	Latlong	Whether forest land or non - forest land	Whether tribal /remote area or non-tribal area
1	2	3	4	5	6	7	8	9	10	11	12	13	14	15	16	17	18	19	20	21
20	Kolha pur	Kolhapur	Hiryankeshi (Surf nala) M.I.P	11691	6MHC/ 035/ 2009/BHO /4143 dt. 9.12.11	**6.5**	10th Y.O.	6.500	1	6.500	400 (Model 400+1100)	6864	**0.48**	Ajara	Dhangarwadi	Ghatkar wadi Kitwade	G.No. 256	N.74°5'21.09" E.16°3'13.27""	Forest Land	Non Tribal
21	Kolhapur	Kolhapur	Dhobhol to Benglor Gas Pipe Line of GAIL (I)	12010	MOEFNo 6 MHC/050/2011 /BHO /319 dt. 22.2.12	14.84	10th Y.O.	14.840	1	30.000	400 (Model 400+1100)	6864	**2.20**	Gargoti	Gargoti	Donwade	J.S.No. 330B	N.74°83'892" E.16°14'141"	Forest Land	Non Tribal
			Total for Kolhapur Divison			**21.34**		**21.340**	**2**	**36.500**			**2.68**							
22	Kolhapur	Satara	Jihe Kathapur Lift Irrigation Projects	11097	FLD-2003/CR-12/F-10dt. 6.10.07	0.150	10th Y.O.	0.850	1	0.150	400 (Model 400+1100)	6864	**0.01**	Dahiwadi	Dahiwadi	Dahiwadi	854	N 17 42 462 E 74 36 290	Forest Land	Non Tribal
23	Kolhapur	Satara	Bondarwadi approach Road	11308	6-MHB109/ 2008/BHO/2883dt. 11/4/2011	0.08	10th Y.O.	0.100	1	0.100	400 (Model 400+1100)	6864	**0.01**	Medha	Medha	Kadepur	29P	N 17 52 35 E 73 44 56	Non Forest Land	Non Tribal
24	Kolhapur	Satara	Wind Power Project 33 KV Tr. Lne	11964	6MHB/013/2011/BHO/dt. 2/22/2011	3.960	10th Y.O.	3.960	1	3.960	400 (Model 400+1100)	6864	**0.29**	Vaduj	Mayani	Kaledhone	G.No 372	N 17 24 25 04 E 74 39 12 56	Non Forest Land	Non Tribal
25	Kolhapur	Satara	Wind Power Project Rameshwar Revalkar wadi	11896	6MHB-025/2011/ B40/ 48dt. 9/1/2012	1.460	10th Y.O.	1.460	1	1.460	400 (Model 400+1100)	6864	**0.11**	Vaduj	Vaduj	Pusesawal i		N 17 28 0074 E 74 16 46 94	Non Forest Land	Non Tribal
			Total for Satara Divison			**5.650**		**6.370**	**4**	**5.670**			**0.42**							
26	Kolhapur	Sangali	Sulwade canal irrigation Project (Dule Dist)	out Side Project	Reginal APCCF of G.O.I.8B/167/2001/FCW/1369 dt. 16.06.2002	16.32	10th Y.O.	16.320	1	16.320	400 (Model 400+1100)	6864	**1.20**	Sangli	K. Mahankal	K. Mahankal	307	N.17 08 56.98 E.74 54 06.55		Non Tribal
27	Kolhapur	Sangali	Prakash Burai Lift irri. Project.	out Side Project	Reginal APCCF of G.O.I.8-29/2001/FC/dt. 23.07.2002	10	10th Y.O.	10.000	1	10.000	400 (Model 400+1100)	6864	**0.73**	Atpadi	Kharsndi	Zare	199	N.17°35'9292 E.74°82'0549		Non Tribal
			Total for Sangali Divison			**26.32**		**26.320**	**2**	**26.320**			**1.93**							
			Total 10th Y.O.			**53.310**		**54.030**	**8**	**68.490**			**5.03**							
			Grand total of Kolhapur circle			**283.62**		**328.739**	**33**	**343.530**			**50.13**							

Sr. No.	Circle	Division	Name of the Project	Project ID	Final sanction	Area of the Project (ha)	Year of Operation (i.e. SYO, TYO etc.)	Projectwise total area of SYO, TYO etc.	Total No of sites w.r.t. col. 12	Area of maintenance of plantation at each site	Plantation model being used (no. of plants per ha.)	Rate/ ha (Rs)	Amount (Rs. Lakhs)	Details of Area under treatment						
														Range	Round	Beat	Compartment no.	Latlong	Whether forest land or non - forest land	Whether tribal /remote area or non-tribal area
1	2	3	4	5	6	7	8	9	10	11	12	13	14	15	16	17	18	19	20	21
1	Nagpur	Bhandara	Surewada Lift Irr. Scheme	12429	GOI R.O.FC-1I/MH-4/2016-NGP/4572dt. 11/8/2018	37.512	SYO	75.020	1	20.000	1111 (Model-3) (Old)	32926	**7.05**	Lakhandur	Dighori	Ddighori	1109, 1050	N 20 53 07.50 E 079 56 55.50	Forest Land	Non Tribal
2	Nagpur	Bhandara	Bhimalkasa M.I. Project	581	GOI, Delhi8-116/2000-FCdt. 7/17/2015	116.03	SYO	10.000	1	10.000	1111 (Model-3) (Old)	32926	**3.52**	Sakoli	Umri	Umri	243/ 2 Z.J.	N 21°03'30.84" E 80°41'19.66"	Forest Land	Non Tribal
3	Nagpur	Bhandara					SYO	15.060	1	12.060	1111 (Model-3) (Old)	32926	**4.25**	Sakoli	Umri	GondUmri	474/1,2	N 12°00'24.44" E 80°04'40.90"	Forest Land	Non Tribal
			Total of Bhandara Division			**153.54**		**100.080**	**3**	**42.060**			**14.82**							
4	Nagpur	Gondia	132 KV (MIDC) Gondia Grid Substation to Hirdamali Railway transmision line	FP/MH/TRANS/26377/2017	G.O.I.5779 dt. 30.09. 2019	1.4244	SYO	3.000	1	3.000	2500 (Model-1) (New)	54133	**1.74**	Tiroda	Tiroda	Tiroda	Bagholi 740	N-21.30.250, E-79.57.430	Forest Land	Non Tribal
			Total of Gondia Division			**1.42**		**3.000**	**1**	**3.000**			**1.74**							
			Total SYO			**154.97**		**103.080**	**4**	**45.060**			**16.56**							
5	Nagpur	Bhandara	Chandrapur Van Academy	12494	GOIFC-2/MH-62/2017-NAG/2985dt. 12/6/2017	28	TYO	11.000	1	11.000	1111 (Model-3) (Old)	24275	**2.86**	Sakoli	Sangadi	Salebuldi	289/2 Z.J.	N- 21'23'48.06" E-79.5224'.12"	Forest Land	Non Tribal
			Total of Bhandara Division			**28.00**		**11.000**	**1**	**11.000**			**2.86**							
6	Nagpur	Gondia	Ash Utilization Promotion and Research Park at Kachewani and Mendipar, Tirora, gondia	12230	G.O.I.F.No.8-7/2017-FCdt. 03.07. 2018	141.990	TYO	8.830	1	8.830	1111 (Model-4) (New)	25180	**2.38**	Gondia	Gondia	Sirpur	82	N-21.33.468, E-80.15.384	Forest Land	Non Tribal
7	Nagpur	Gondia					TYO	8.080	1	8.080		25180	**2.18**	Gondia	Gondia	Rajegaon	336/1, 356	N-21.56.990, E-80.23.642	Forest Land	Non Tribal
8	Nagpur	Gondia					TYO	4.500	1	4.500		25180	**1.21**	Gondia	Gondia	Shiwani	618, 678, 679	N-21.31.337, E-80.17.974	Forest Land	Non Tribal
9	Nagpur	Gondia					TYO	6.090	1	6.090		25180	**1.64**	Gondia	Gondia	Chulod	943, 882/1, 322	N-21.27.990, E-80.15.048	Forest Land	Non Tribal
10	Nagpur	Gondia					TYO	4.000	1	4.000		25180	**1.08**	Gondia	Gondia	Datora	709/1, 731, 713,	N-21.26.268, E-80.15.393	Forest Land	Non Tribal
			Total of Gondia Division			**141.990**		**31.500**	**5**	**31.500**			**8.49**							

Sr. No.	Circle	Division	Name of the Project	Project ID	Final sanction	Area of the Project (ha)	Year of Operation (i.e. SYO, TYO etc.)	Projectwise total area of SYO, TYO etc.	Total No of sites w.r.t. col. 12	Area of maintenance of plantation at each site	Plantation model being used (no. of plants per ha.)	Rate/ ha (Rs)	Amount (Rs. Lakhs)	Details of Area under treatment						
														Range	Round	Beat	Compartment no.	Latlong	Whether forest land or non - forest land	Whether tribal /remote area or non-tribal area
1	2	3	4	5	6	7	8	9	10	11	12	13	14	15	16	17	18	19	20	21
11	Nagpur	Wardha	Maharani Paints Pvt. Ltd. For const. of road and other structure	12423	GOIF.No./MH-46/2016-NGP/3287dt. 2/14/2018	0.33	TYO	4.000	1	4.000	1111 (Model - 5) (New)	44751	**1.92**	wardha	wardha	wardha	279 & 199	N-20.73875 E-78.64780	Forest Land	Non Tribal
12	Nagpur	Wardha	chandrapur Forest Academy	12494	GOIF.No./ FC-II/MH-62/2017-NGP/ 2985dt.	28.00	TYO	45.000	1	17.000	1111 (Model - 5) (New)	44751	**8.14**	Ssmudrapur	Ssmudrapur	Jam	137,138, 139,142	N-20.645915 E-78.944012	Forest Land	Non Tribal
	Nagpur	Wardha					TYO		1	28.000	1111 (Model - 5) (New)	44751	**13.41**	wardha	Hingangha t	kadajana	147/2 ,159,160, 138	N-20.502932 E-78.89917	Forest Land	Non Tribal
			Total of Wardha Division			**28.33**		**49.000**	**3**	**49.000**			**23.46**							
			Total TYO			**198.32**		**91.500**	**9**	**91.500**			**34.81**							
13	Nagpur	Nagpur	400 KV D/C Mouda - Baitul Transmission line.	12415	GOIFC-I/MH-16/2015-NGP/1778dt. 5/15/2017	1.705	4th Y.O.	3.416	1	3.416	1111 (Model-3) (Old)	17845	**0.65**	North Umred	Makardhokda	Makardhokda	S.N. 47 of Compt. No. 382 PF village sasegoan tq. Kuhi	N.20 59 4.00 E. 79 16 40.00	Forest Land	Non Tribal
14	Nagpur	Nagpur	International Zoo, Gorewada, Nagpur in f/o FDCM, Ltd	12457	GOI8-25/ 2016-FC,dt. 6/20/2017	564.00	4th Y.O.	CA - 170.00 ha.	1	20.000	1111 (Model-3) (Old)	17845	**3.82**	Butibori	Butibori(E.)	Sonegaon	77	N 20 49 27 86 E 78 58 15 49	Forest Land	Non Tribal
15	Nagpur	Nagpur					4th Y.O.		1	30.000	1111 (Model-3) (Old)	17845	**5.73**	Butibori	Butibori(W.)	Ajangaon	108	N 20 52 34 44 E 78 56 07 54	Forest Land	Non Tribal
16	Nagpur	Nagpur					4th Y.O.		1	10.000	1111 (Model-3) (Old)	17845	**1.91**	Butibori	Butibori(W.)	Ajangaon	3	N 20 52 09 45 E 78 56 24 09	Forest Land	Non Tribal
17	Nagpur	Nagpur					4th Y.O.		1	25.000	1111 (Model-3) (Old)	17845	**4.77**	North Umred	Makar-dhokda	Kolarmet	227	N.20 59 13.00 E. 79 17 11.00	Forest Land	Non Tribal
18	Nagpur	Nagpur					4th Y.O.		1	25.000	1111 (Model-3) (Old)	17845	**4.77**	Kalmeswar	Adasa	Adasa	485	N 21 19 10 32 E 079 48 31 37	Forest Land	Non Tribal
19	Nagpur	Nagpur					4th Y.O.		1	25.000	1111 (Model-3) (Old)	17845	**4.77**	Kalmeswar	Adasa	Mohapa	7	N 21 15 20 37 E 079 52 17 37	Forest Land	Non Tribal
20	Nagpur	Nagpur	Gokul Open Cast Coal Mining Project of WCL, Umred Area.	12242	GOI6-MHC-27/2014-BHO/ 2200,dt. 8/6/2017	11.90	4th Y.O.	CA 23.80	1	23.800	1111 (Model-3) (Old)	17845	**4.54**	North Umred	Makar-dhokda	Makar-dhokda	Sur. No. 47 of Compt. No. 382-PF, Village Sasegaon, Tal. Kuhi.	N.20 59 48.00 E. 079 21 1.00	Forest Land	Non Tribal
21	Nagpur	Nagpur					4th Y.O.	0.20 ha. (Plantation of 1.5 times the	1	0.200	1111 (Model-3) (Old)	17845	**0.04**	North Umred	Makar-dhokda	Makar-dhokda		N.20 59 16.00 E. 079 16 52.00	Forest Land	Non Tribal

Sr. No.	Circle	Division	Name of the Project	Project ID	Final sanction	Area of the Project (ha)	Year of Operation (i.e. SYO, TYO etc.)	Projectwise total area of SYO, TYO etc.	Total No of sites w.r.t. col. 12	Area of maintenance of plantation at each site	Plantation model being used (no. of plants per ha.)	Rate/ ha (Rs)	Amount (Rs. Lakhs)	Details of Area under treatment						
														Range	Round	Beat	Compartment no.	Latlong	Whether forest land or non - forest land	Whether tribal /remote area or non-tribal area
1	2	3	4	5	6	7	8	9	10	11	12	13	14	15	16	17	18	19	20	21
22	Nagpur	Nagpur	Manufacturing of Transmission Towers (Expansion) Project of M/s. Amitasha Enterprises Pvt Ltd, Nagpur	12218	GOI6-MHC05/2015-BHO/ 2146, dt. 7/27/2017	10.94	4th Y.O.	CA 10.94	1	10.940	1111 (Model-3) (Old)	17845	**2.09**	North Umred	Makar-dhokda	Makar-dhokda	Compt. No. 382(PF) (Gut No. 33, 34, 61) of Village	N.20 59 53.00 E. 079 17 0.00	Forest Land	Non Tribal
23	Nagpur	Nagpur	M/s Parkar Hanniffin India Pvt. Ltd., for expansion of existing factory.	12385	GOIFC-II/ MH-39/ 2016-NGP/2616, dt. 9/27/2017	1.312	4th Y.O.	CA - 1.312	1	1.312	1111 (Model-3) (Old)	17845	**0.25**	North Umred	Makar-dhokda	Makar-dhokda	Sur. No. 47 of Compt. No. 382-PF, Village Sasegaon, Tal. Kuhi.	N.20 59 00.50 E. 079 16 35.19	Forest Land	Non Tribal
24	Nagpur	Nagpur					4th Y.O.	PCA - 2.624	1	2.624	1111 (Model-3) (Old)	17845	**0.50**	North Umred	Makar-dhokda	Makar-dhokda			Forest Land	Non Tribal
25	Nagpur	Nagpur	Laying of Ash disposal pipeline from KTPS to Nandgaon Ash bund. Khaparkheda Thermal Power Stn, MSPGC Ltd. Nagpur	11168	GOIFC-I/ MH-06/ 2015-NGP/ 3450 dt. 26/03/ 2018	0.96	4th Y.O.	CA - 1.00 ha.	1	1.000	1111 (Model-3) (Old)	17845	**0.19**	Parseoni	Parseoni	Parsodi	Village Salai (Mahuli), Sur. No. 156, PH. No. 5, Tal. Parseoni, Dist Nagpur.	N 21 36 70 61 2 E 079 17 47 91 7	Forest Land	Non Tribal
26	Nagpur	Nagpur	Kochi Barriage on Kanhan River Project. 72.00 ha. (51.00 ha. in Maharashtra + 21.00 ha. in MP)	11836	GOI8-67/ 2009-FCdt. 5/18/2018	51.00	4th Y.O.	CA 102.00 ha.	1	82.000	1111 (Model-3) (Old)	17845	**15.66**	Butibori	Butibori (East)	Dongar-gaon	Village Kirnapur, Sur. No. 64, Tahsil Nagpur ®.	N 20 52 32 76 E 079 01 58 58	Forest Land	Non Tribal
27	Nagpur	Nagpur	Singori Open Cast Mine project of Western Coalfields Ltd.	11465	GOI6-MHC 026/ 2014-BHO/ 3996dt. 7/31/2018	14.23	4th Y.O.	CA 28.46 (say 28.50 ha.)	1	28.500	1111 (Model-3) (Old)	17845	**5.44**	Hingna	Hingna	Wana-dongari	Village Nagalwadi Sur. no. 34 and Village Wanadongri Sur. no. 163, Tal. Hingna	N 21 06 35 26 E 078 58 14 20	Forest Land	Non Tribal
28	Nagpur	Nagpur	Nagpur-Mumbai Expressway (Package-I). (Nagpur 15.786 ha.+ Wardha 34.770 ha.) = Total 50.556 ha.	12562	GOIIn-principle approval FC-III/MH-28/2018-NGP/3605dt. 5/5/2018	50.556	4th Y.O.	CA 102.00 ha.	1	25.000	1111 (Model-3) (Old)	17845	**4.77**	Butibori	Butibori (East)	Dongargaon	Sur.No.52, Village Bothali, Tal. Nagpur(R.)	N 20 57 45 64 E 079 01 59 72	Forest Land	Non Tribal
29	Nagpur	Nagpur					4th Y.O.		1	15.000	1111 (Model-3) (Old)	17845	**2.86**	Butibori	Butibori (East)	Dongargaon	Sur.No.99, Village Waranga, Tal. Nagpur(R.)	N 20 56 11 57 E 079 02 01 28	Forest Land	Non Tribal
30	Nagpur	Nagpur					4th Y.O.		1	25.000	1111 (Model-3) (Old)	17845	**4.77**	Butibori	Butibori (East)	Dongargaon	Sur.No. 141, Village Banwadi, Tal. Nagpur(R.)	N 24 31 22 22 E 079 52 77	Forest Land	Non Tribal
31	Nagpur	Nagpur					4th Y.O.		1	37.000	1111 (Model- 5) (Old)	17845	**7.06**	North Umred	Makardhokda	Makardhokda	Sur.No. 89 & 90, Village Hewati, Tal. Nagpur(R.)	N.20 54 18.00 E. 079 13 57.00	Forest Land	Non Tribal

Sr. No.	Circle	Division	Name of the Project	Project ID	Final sanction	Area of the Project (ha)	Year of Operation (i.e. SYO, TYO etc.)	Projectwise total area of SYO, TYO etc.	Total No of sites w.r.t. col. 12	Area of maintenance of plantation at each site	Plantation model being used (no. of plants per ha.)	Rate/ ha (Rs)	Amount (Rs. Lakhs)	Details of Area under treatment						
														Range	Round	Beat	Compartment no.	Latlong	Whether forest land or non - forest land	Whether tribal /remote area or non-tribal area
1	2	3	4	5	6	7	8	9	10	11	12	13	14	15	16	17	18	19	20	21
32	Nagpur	Nagpur	NH-353D Nagpur-Umred Sec. Package-IA (Km. 7.300 to 48.000)	12611	GOIIn-principle approval FC-II/MH-82/2018-NGP/4244dt. 9/10/2018	28.667	4th Y.O.	CA 58.014	1	58.014	1111 (Model- 5) (Old)	17845	**11.08**	North Umred	Champa	Uti	Comptt. No. 403-RF, Tal. Umred, Dist. Nagpur	N.20 57 30.00 E. 079 15 7.00	Forest Land	Non Tribal
33	Nagpur	Nagpur	Nagpur-Mumbai Expressway (Package-IV). (Western Part of Nashik)		GOIIn-principle approval FC-II/MH-87/2018-NGP/3643dt. 5/5/2018	22.920	4th Y.O.	CA 46.00	1	46.000	1111 (Model-3) (Old)	17845	**8.78**	Butibori	Butibori (East)	dongargoan	Village Banwadi, Sur.No. 141, Tal. Nagpur ®.	N 59 51 66 E 079 04 50 61	Forest Land	Non Tribal
34	Nagpur	Nagpur	Construction of NH-6 with ROB's & River Bridge from Pardi Octroi Naka to Itwari, the vendors along NH to be rehabillated and in view of Vendor Market at Bhandewdai is Proposed.	12577	GOIIn-principle approval FC-I/MH-95/2018-NGP/3956dt. 7/19/2018	1.614	4th Y.O.	CA 3.50 ha.	1	3.500	1111 (Model-3) (Old)	17845	**0.67**	Butibori	Butibori (East)	Dongargaon	Sur.No. 57, PH.No. 86, Village Kawatha, Tal. Nagpur (R.)	N 20 48 42 23 E 079 55 13 90	Forest Land	Non Tribal
35	Nagpur	Nagpur	765KV D/C Gadarwada-Warora TL of Powergrid, Ltd. (Nagpur 46.656 ha. + Wardha 4.075 ha.) = 50.731 ha.	12492	GOIFinal Sactioned FC-III/MH-20/2017-NGP/4083dt. 8/14/2018	50.731	4th Y.O.	CA 101.46	1	12.000	1111 (Model-3) (Old)	17845	**2.29**	Hingna	Hingna	Wanadongri	Village Surabardi, Sur. No. 99 & 100, Tal. Hingna	N 21 08 50 45 E 078 55 59 85	Forest Land	Non Tribal
36	Nagpur	Nagpur					4th Y.O.		1	13.000	1111 (Model-3) (Old)	17845	**2.48**	Hingna	Hingna	Mohagaon	Village Sinka, Sur. No. 21, Tal. Hingna	N 21 07 08 46 E 078 54 39 39	Forest Land	Non Tribal
37	Nagpur	Nagpur					4th Y.O.		1	13.000	1111 (Model-3) (Old)	17845	**2.48**	Hingna	Hingna	Mohagaon	Village Sinka, Sur. No. 88 & 89, Tal. Hingna	N 21 06 50 E 078 54 13 63	Forest Land	Non Tribal
38	Nagpur	Nagpur					4th Y.O.		1	10.000	1111 (Model-3) (Old)	17845	**1.91**	Parseoni	Parseoni	Bhagemahari	Village Karambhad, Sur. No. 128,129,127,171,12	N 21 38 25 00 E 079 11 50 0	Forest Land	Non Tribal
39	Nagpur	Nagpur					4th Y.O.		1	35.462	1111 (Model-3) (Old)	17845	**6.77**	Parseoni	Parseoni	Peth Parsodi	Village Salai (Bitoli), Sur. No. 190,153,182,183,18	N 21 36 72 18 9 E 079 17 52 64 1	Forest Land	Non Tribal
40	Nagpur	Nagpur					4th Y.O.		1	5.000	1111 (Model-3) (Old)	17845	**0.95**	Parseoni	Chargaon	Navegaon Khairi	Village Kuwara Bhivsen, Compt. No. 236-PF, Tal.	N 21 29 19 06 E 079 01 01 79	Forest Land	Non Tribal
			Total of Nagpur division			**810.535**			**28**	**586.768**			**112.04**							
			Total 4th Y.O.			**810.535**			**28**	**586.768**			**112.04**							

Sr. No.	Circle	Division	Name of the Project	Project ID	Final sanction	Area of the Project (ha)	Year of Operation (i.e. SYO, TYO etc.)	Projectwise total area of SYO, TYO etc.	Total No of sites w.r.t. col. 12	Area of maintenance of plantation at each site	Plantation model being used (no. of plants per ha.)	Rate/ ha (Rs)	Amount (Rs. Lakhs)	Details of Area under treatment						
														Range	Round	Beat	Compartment no.	Latlong	Whether forest land or non - forest land	Whether tribal /remote area or non-tribal area
1	2	3	4	5	6	7	8	9	10	11	12	13	14	15	16	17	18	19	20	21
44	Nagpur	Nagpur	Mokhabardi Lift Irrigation scheme	12031	GOINo.6-MHB-92/2012-BHO/1361dt. 26/08/2013	3.166	5th Y.O.	3.360	1	3.360	400+ 1100	61279	**2.20**	South Umred	Bhiwapur	Mokhala	S.No.7	N 20 49 52 74 E 079 32 04 21	Forest Land	Non Tribal
45	Nagpur	Nagpur	Khaparkheda Thermal Power Station in order to create an Ash for disposing Waste Ash & for laying of Ash pipeline (CA)	11168	GOI 8-103/ 2007–FC dt. 11.03.2013	51.40	5th Y.O.	51.400	1	51.400	400+ 1100	61279	**33.70**	Ramtek	Patgowari	Patgowari	Village Bakhari, Tal. Parseoni Sur. No. 164/1 (A), 164/1 (B), 164/2, 164/3, 164/4, 165, 167/1(A), 167/2 (A), 168, 169/2, 170, 172, 173, 174, 175, 176, 186, 187, 188, 189 & 190	N 21 18 31.86 E 079 11 53 72	Non Forest Land	Non Tribal
46	Nagpur	Nagpur	765KV Raipur pooling station – Wardha T/L-2. Power Grid (I) Ltd.	12360	GOI8-92/ 2014-FC dt. 12/7/2015	11.565 (Bramhapuri 9.1706 ha., Gondia 20.960 ha., Wadsa 253.729 ha. & Nagpur 11.565 ha. = 295.425 ha.)	5th Y.O.	24.548	1	24.548	1111 (Model-3) (Old)	17845	**4.69**	North Umred	Makar-dhokda	Makar-dhokda	Compt. No.382-PF / Sur.No.47	N.20 59 07.97 E. 079 16 57.18	Forest Land	Non Tribal
47	Nagpur	Nagpur	Laying of pipeline for Ramganesh Gadkari Sugar Factory (WSPL)	1573	GOIFLD/3495/ CR-944/F-10 dt. 11.12.1995	0.025	5th Y.O.	0.620	1	0.620	400 (Model-400+1100)	7192	**0.05**	Pauni	Pauni	Sawangi	423	N.21 15 29 11 9 E. 079 08 30 72 9	Forest Land	Tribal
47	Nagpur	Nagpur	Microwave Reapiter Station, Chimnazari	1575	State Gov.FLD-3494/ CR/874/F-10 dt. 20.4.1995	0.25	5th Y.O.	1.630	1	1.630	400 (Model-400+1100)	7192	**0.13**	Pauni	Pauni	Sawangi	423	N.21 53 72 80 E. 079 38 25 72	Forest Land	Tribal
49	Nagpur	Nagpur	Zudpi Jungle land for mining Lease Smt. Barnabai S. Kamble	2036	GOI8C/5/560/98/ FCW/2568 dt. 11/19/2003	0.809	5th Y.O.	3.120	1	3.120	400 (Model-400+1100)	7192	**0.24**	Pauni	Pauni	Sawangi	423	N.21 53 23 05 E. 079 37 31 56	Forest Land	Tribal

Sr. No.	Circle	Division	Name of the Project	Project ID	Final sanction	Area of the Project (ha)	Year of Operation (i.e. SYO, TYO etc.)	Projectwise total area of SYO, TYO etc.	Total No of sites w.r.t. col. 12	Area of maintenance of plantation at each site	Plantation model being used (no. of plants per ha.)	Rate/ ha (Rs)	Amount (Rs. Lakhs)	Details of Area under treatment						
														Range	Round	Beat	Compartment no.	Latlong	Whether forest land or non - forest land	Whether tribal /remote area or non-tribal area
1	2	3	4	5	6	7	8	9	10	11	12	13	14	15	16	17	18	19	20	21
50	Nagpur	Nagpur	Gharatwada Water Supply Scheme, WSS, S.Hill, NGP	2117	State Gov.FLD/34992 /CR-130/F-10 dt. 4/12/2001	0.48	5th Y.O.	3.000	1	3.000	400 (Model-400+1100)	7192	**0.23**	Pauni	Pauni	Sawangi	423	N.21 53 22 97 E. 079 27 58	Forest Land	Tribal
51	Nagpur	Nagpur	Laying of Pipeline from Gorewada Water Treatment Plant to Master Reservior S/Hills.	2591	State Gov.FLD/3402/ CR-60/F-10 dt. 17.12.2002	0.171	5th Y.O.	1.250	1	1.250	400 (Model-400+1100)	7192	**0.10**	Pauni	Pauni	Sawangi	423	N.21 53 23 11 E. 079 37 27 85	Forest Land	Tribal
52	Nagpur	Nagpur	Mothers pet Edn society's Center Point School - Appoarch road.	2652	GOI8B/19/154/ 95-FCW dt. 12.10.1993	0.159	5th Y.O.	1.000	1	1.000	400 (Model-400+1100)	7192	**0.08**	Pauni	Pauni	Sawangi	423	N.21 56 90 80 E. 079 51 40 17	Forest Land	Tribal
53	Nagpur	Nagpur	Approach Road to AMD	2653	GOI8B/90/94/FCW/94 dt. 20.1.1995	0.14	5th Y.O.	1.000	1	1.000	400 (Model-400+1100)	7192	**0.08**	Pauni	Pauni	Sawangi	423	N.21 52 33 53 E. 079 36 45 16	Forest Land	Tribal
54	Nagpur	Nagpur	Shekapur Per. Tank	828	GOI8C-1/411/97-FCW/1720 dt. 24.7.2002	7.85	5th Y.O.	15.700	1	15.700	400+ 1100	61279	**10.29**	Kalme-shwar	Adasa	Mohapa	Mauza Budhala, Tal. Kalmeshwar Sur. No. 100	N 21 19 13 71 E 079 45 39 34	Zudpi Jungle	Non Tribal
55	Nagpur	Nagpur	Mokhabardi L.I. Scheme	1929	GOI8C-1/610/98-FCW/1824 dt. 9/9/2005	9.925	5th Y.O.	19.900	1	19.900	400+ 1100	61279	**13.05**	North Umred	Umred	Dhurkhed	Mauza Sirpur Sur. No. 315 Tal Umred	N.20 51 05.46 E. 079 14 20.37	Zudpi Jungle	Non Tribal
56	Nagpur	Nagpur	MOIL mine at Tigaon	2053	GOI8C/5/605/98-FCW/ 1616 dt. 7/16/2003	0.55	5th Y.O.	1.000	1	1.000	400+ 1100	64203	**0.69**	Pauni	Pauni	Sawangi	423	N.21 56 91.35 E. 079 51 37 81	Forest Land	Tribal
57	Nagpur	Nagpur	MOIL. Mansar	2481	GOI8C/3/2001-FCW/ 908 dt. 29.05.2012	5.72	5th Y.O.	6.640	1	6.640	400+ 1100	64203	**4.56**	Pauni	Pauni	Sawangi	423	N.21 53 22.48 E. 079 37 27 79	Forest Land	Tribal
58	Nagpur	Nagpur	Feteri Under ground Pipe Line	2515	State Gov.FLD-3401/CR-63/ F-10dt. 8.4.2002	0.086	5th Y.O.	0.172	1	0.172	400+ 1100	64203	**0.12**	Pauni	Pauni	Sawangi	423	N.21 53 22.39 E. 079 37 27 70	Zudpi Jungle	Tribal
59	Nagpur	Nagpur	Ambhora Lift Irrigation Scheme	2741	State Gov.GOM 63402/ CR-20/F-10 dt. 19.12.2007	0.54	5th Y.O.	1.000	1	1.000	400+ 1100	64203	**0.69**	Pauni	Pauni	Sawangi	423	N.21 50 50.26 E. 079 38 02 13	Forest Land	Tribal

Sr. No.	Circle	Division	Name of the Project	Project ID	Final sanction	Area of the Project (ha)	Year of Operation (i.e. SYO, TYO etc.)	Projectwise total area of SYO, TYO etc.	Total No of sites w.r.t. col. 12	Area of maintenance of plantation at each site	Plantation model being used (no. of plants per ha.)	Rate/ ha (Rs)	Amount (Rs. Lakhs)	Details of Area under treatment						
														Range	Round	Beat	Compartment no.	Latlong	Whether forest land or non - forest land	Whether tribal /remote area or non-tribal area
1	2	3	4	5	6	7	8	9	10	11	12	13	14	15	16	17	18	19	20	21
60	Nagpur	Nagpur	Lodha Sitapar	2771	State Gov.FLD-3402/ CR-22/F-10 dt. 9.2.2004	0.20	5th Y.O.	1.000	1	1.000	400+ 1100	64203	**0.69**	Pauni	Pauni	Sawangi	423	N.21 52 70.20 E. 079 34 07 21	Forest Land	Tribal
61	Nagpur	Nagpur	Laying of water pipeline along the ROW Chhindwada Rd to Katol Road (Near Katol Naka).	11907	State Gov.CCF(T), Nagpur No. 1023 dt. 17.5.2010	0.091	5th Y.O.	1.000	1	1.000	400+ 1100	64203	**0.69**	Pauni	Pauni	Sawangi	423	N.21 49 41.76 E. 079 33 12 64	Forest Land	Tribal
			Total of Nagpur division			**93.127**		**137.340**	**18**	**137.340**			**72.26**							
62	Nagpur	Wardha	Kar river Canal Project	2374	G.O.I8c/1/571/98-FCWdt. 29.10.1998	18.09	5th Y.O.	36.180	1	7.610	400+ 1100	61279	**4.99**	Samudrapur	Kora	Nandori	131,134	N-20.55861 E-78.981907	Forest Land	Non Tribal
63	Nagpur	Wardha	Const. of Karanja Aurangbad mumbai by pass	2759	G.I.O83136/2001/FCW-2881dt. 12/5/2002	1.96	5th Y.O.	3.920	1	3.920	400+ 1100	61279	**2.57**	Wardha	Hiingnghat	Seoo	125	N-20.467963 E-78.986618	Forest Land	Non Tribal
64	Nagpur	Wardha	Giga Solution	0	G.I.Odesk-17/NC/1/2171dt. 10/14/2002	0.028	5th Y.O.	0.500	1	0.500	400+ 1100	61279	**0.33**	Wardha	Hiingnghat	Seoo	125	N-20.467963 E-78.986618	Forest Land	Non Tribal
			Total of Wardha Division			**20.08**		**40.600**	**3**	**12.030**			**7.89**							
			Total 5th Y.O.			**113.21**		**177.940**	**21**	**149.370**			**80.14**							
67	Nagpur	Nagpur	Khaparkheda Thermal Power Station in order to create an Ash for disposing Waste Ash & for laying of Ash pipeline (CA)	11168	GOI 8-103/ 2007–FC dt. 11.03.2013	51.40	6th Y.O.	10.000	1	10.000	400+ 1100	24402	**2.61**	Ramtek	Patgowari	Patgowari	Sur No. 213 Mouza Bakhari	N 21 18 55.98 E 079 11 24 25	Forest land - Zudpi Jungle	Non Tribal
68	Nagpur	Nagpur	Construction of Forest Rest House at S/Hills Comptt. No. 715 (RF) of Nagpur City	11525	GOI6-MHB 037/2010-BHO/1862 dt. 26.11.2012	0.10	6th Y.O.	100 Plants	1	-	100 plants seedling	-	**0.07**	Seminary Hills	Seminary Hills	Seminary Hills	715	N21.169 E 79.065	Forest Land	Non Tribal

Sr. No.	Circle	Division	Name of the Project	Project ID	Final sanction	Area of the Project (ha)	Year of Operation (i.e. SYO, TYO etc.)	Projectwise total area of SYO, TYO etc.	Total No of sites w.r.t. col. 12	Area of maintenance of plantation at each site	Plantation model being used (no. of plants per ha.)	Rate/ ha (Rs)	Amount (Rs. Lakhs)	Details of Area under treatment						
														Range	Round	Beat	Compartment no.	Latlong	Whether forest land or non - forest land	Whether tribal /remote area or non-tribal area
1	2	3	4	5	6	7	8	9	10	11	12	13	14	15	16	17	18	19	20	21
69	Nagpur	Nagpur	Railway Siding line at Vill. Khapri, Khairikhurd in Tal. Hingna Dist. Nagpur and Vill. Sindi in Tal. Selu, Dist. Wardha (0.50 ha. of Nagpur Div. + 0.335 ha. of Wardha Div. = 0.835 ha.)	11892	GOI6-MHB 041/2011-BHO/463 dt. 22/03/2012	0.50	6th Y.O.	2.000	1	2.000	400+ 1100	24402	**0.52**	Butibori	Butibori (West)	Junapani	311 (RF)	N 20 52 50 50 E 078 56 53 32	Forest Land	Non Tribal
70	Nagpur	Nagpur	Laying of water pipeline along the RoW Uti-Makardhokda (ODR-102) to Nagpur - Umred & Nagpur - Umred to Welsakhra.	11947	GOI6MHB 042/2011-BHO/1317 dt. 13.08.2012	0.19	6th Y.O.	1.000	1	1.000	400+ 1100	24402	**0.26**	Katol	Katol	Khandala	48	N 21 15 09 07 E 079 32 04 16	Forest Land	Non Tribal
71	Nagpur	Nagpur	Construction of Medicinal Plants Training Centre & Admin Office Building of FDCM, Ltd. Nagpur.	11955	GOI6-MHB 077/2010-BHO/40 dt. 2/1/2013	0.83	6th Y.O.	1.000	1	1.000	400+ 1100	24402	**0.26**	Katol	Katol	Khandala	48	N 21 15 02 22 E 079 32 03 91	Forest Land	Non Tribal
72	Nagpur	Nagpur	Ground Service Reservior (GSR) of Pench Project Cell, NMC, Nagpur	11985	GOI6MHB 158/2011-BHO/311 dt. 18.02.2013	0.9476	6th Y.O.	2.000	1	2.000	400+ 1100	24402	**0.52**	Butibori	Butibori (West)	Junapani	311 (RF)	N 20 52 50 92 E 078 56 55 08	Forest Land	Non Tribal
73	Nagpur	Nagpur	Canal of Lodha-Sitapar Lift Irrigation Scheme, Ramtek	12017	GOI6-BHB 091/2011-BHO/1952 dt. 11/12/2012	0.175	6th Y.O.	1.000	1	1.000	400+ 1100	24402	**0.26**	Katol	Katol	Khandala	48	N 21 15 06 49 E 079 32 04 49	Forest Land	Non Tribal
74	Nagpur	Nagpur	400 KV D/C Mauda-Wardha Transmission Line. Power Grid (I) Ltd, Bhadrawati Dist. Chandrapur	12041	GOI6-MHC 083/2011-BHO/323 dt. 23.02.2012	13.6804	6th Y.O.	27.361	1	27.360	400+ 1100	24402	**7.14**	South Umred	Umred	Mangrul	356RF	N 20 46 04 44 E 079 20 2 89 7	Forest Land	Non Tribal

Sr. No.	Circle	Division	Name of the Project	Project ID	Final sanction	Area of the Project (ha)	Year of Operation (i.e. SYO, TYO etc.)	Projectwise total area of SYO, TYO etc.	Total No of sites w.r.t. col. 12	Area of maintenance of plantation at each site	Plantation model being used (no. of plants per ha.)	Rate/ ha (Rs)	Amount (Rs. Lakhs)	Details of Area under treatment						
														Range	Round	Beat	Compartment no.	Latlong	Whether forest land or non - forest land	Whether tribal /remote area or non-tribal area
1	2	3	4	5	6	7	8	9	10	11	12	13	14	15	16	17	18	19	20	21
75	Nagpur	Nagpur	NH-6 (Nagpur - Wainganga) (Km. 485.000 to 544.200) (Total forest land Bhandara + Nagpur Dn. 3.275 ha.)	12050	GOI6-MHB 022/2012-BHO/1709 dt. 22.10.2012	1.864	6th Y.O.	6.550	1	6.550	400+ 1100	24402	**1.71**	Ramtek	Ramtek	Bhandarbodi	Compt. No. 301 (RF)	N 21 24 53.74 E 079 27 58 28	Forest Land	Non Tribal
76	Nagpur	Nagpur	Laying 700 mm dia pipe line for drinking water and Industrial use from Jackwell to WTP in Industrial Area, Hingna.	12075	GOI6MHB 061/2012-BHO/1298 dt. 07.08.2012	0.32	6th Y.O.	1.000	1	1.000	400+ 1100	24402	**0.26**	Katol	Katol	Khandala	48	N 21 15 07 42 E 079 32 00 55	Forest Land	Non Tribal
77	Nagpur	Nagpur	Chichghat Lift Irrigation Scheme	11898	GOI6MHC 063/2011-BHO/1437 dt. 7/8/2014	5.40	6th Y.O.	10.800	1	2.300	400+ 1100	24402	**0.60**	Butibori	Butibori (east)	Dongargaon	Sur. No. 61	N 20 56 12 1 E 079 04 08 4	Zudpi Jungle	Non Tribal
78	Nagpur	Nagpur					6th Y.O.		1	4.250	400+ 1100	24402	**1.11**	Butibori	Butibori (east)	Dongargaon	Sur. No. 62	N 20 56 350 E 079 0 809	Zudpi Jungle	Non Tribal
79	Nagpur	Nagpur					6th Y.O.		1	4.250	400+ 1100	24402	**1.11**	Butibori	Butibori (east)	Dongargaon	Sur No. 64	N 20 56 736 E 079 04 131	Zudpi Jungle	Non Tribal
80	Nagpur	Nagpur	MOIL. Kandri Mine	2055	GOI8-23/1999-FC dt. 12.11.2014	37.82	6th Y.O.	75.640	1	25.000	400 (Model-400+1100)	6864	**1.84**	Katol	Katol	Walni	Com. No. 70 (RF)	N 21 14 09 62 E 079 31 42 63	Forest Land	Non Tribal
81	Nagpur	Nagpur					6th Y.O.		1	25.000	400 (Model-400+1100)	6864	**1.84**	Katol	Paradsinga	Pandhakani	Com. No. 77 (RF)	N 21 17 05 90 E 079 28 01 12	Forest Land	Non Tribal
82	Nagpur	Nagpur					6th Y.O.		1	25.640	400 (Model-400+1100)	7192	**1.97**	Paoni	Paoni	Tumditola	Com No. 428	N 21 21 36 E79 20 27	Forest Land	Tribal
83	Nagpur	Nagpur	Pench Irrigation Project Khindsi Feedal Canal	11853	GOI6-MHC-22/2013-BHO/432dt. 2.11.2015	16.40	6th Y.O.	32.800	1	14.230	400+ 1100	24402	**3.72**	Butibori	Butibori East	Dongargaon	Sur No. 121	N 20 56 205 E 079 04 088	Zudpi Jungle	Non Tribal
84	Nagpur	Nagpur					6th Y.O.		1	18.570	400+ 1100	24402	**4.85**	Butibori	Butibori East	Dongargaon	Sur No. 113	N 20 56 64 3 E 079 04 124	Zudpi Jungle	Non Tribal
			Total of Nagpur division			**129.63**		**171.151**	**18**	**171.150**			**30.65**							

Sr. No.	Circle	Division	Name of the Project	Project ID	Final sanction	Area of the Project (ha)	Year of Operation (i.e. SYO, TYO etc.)	Projectwise total area of SYO, TYO etc.	Total No of sites w.r.t. col. 12	Area of maintenance of plantation at each site	Plantation model being used (no. of plants per ha.)	Rate/ ha (Rs)	Amount (Rs. Lakhs)	Details of Area under treatment						
														Range	Round	Beat	Compartment no.	Latlong	Whether forest land or non - forest land	Whether tribal /remote area or non-tribal area
1	2	3	4	5	6	7	8	9	10	11	12	13	14	15	16	17	18	19	20	21
85	Nagpur	Bhandara	Diversion of 116.03 ha. Of forest land for construction of Bhimalakasa Iregration project	581	GOIF.No. -8-116/200-FCdt. 7/7/2015	116.00	6th Y.O.	74.000	1	41.000	1111 (Model-3) (Old)	17845	**7.83**	Sakoli	Sakoli	Khamba	70	N 21°09'59.10" E 80°02'36.93"	Forest Land	Non Tribal
86	Nagpur	Bhandara					6th Y.O.	50.000	1	38.000	1111 (Model-3) (Old)	17845	**7.26**	Sakoli	Sakoli	Mokhe	107	N 21°06'73.20" E 80°03'22.07"	Forest Land	Non Tribal
87	Nagpur	Bhandara					6th Y.O.	25.000	1	25.000	1111 (Model-3) (Old)	17845	**4.77**	Sakoli	Sakoli	Ukara	163	N 21°05'25.68" E 80°04'08.85"	Forest Land	Non Tribal
88	Nagpur	Bhandara					6th Y.O.	10.000	1	10.000	1111 (Model-3) (Old)	17845	**1.91**	Sakoli	Sakoli	Pathari/ Jamanapur	161	N 21°06'24.27" E 80°00'09.14"	Forest Land	Non Tribal
89	Nagpur	Bhandara					6th Y.O.	5.000	1	5.000	1111 (Model-3) (Old)	17845	**0.95**	Sakoli	Sakoli	Pathari	162	N 21°06'53.97" E 80°01'18.32"	Forest Land	Non Tribal
90	Nagpur	Bhandara					6th Y.O.	20.000	1	20.000	1111 (Model-3) (Old)	17845	**3.82**	Sakoli	Sakoli	Umri	310	N 21°03'03.95" E 80°01'49'55"	Forest Land	Non Tribal
91	Nagpur	Bhandara					6th Y.O.	18.000	1	18.000	1111 (Model-3) (Old)	17845	**3.44**	Sakoli	Sakoli	Sawargaon	300	N 21°03'03.95" E 80°01'49'55"	Forest Land	Non Tribal
92	Nagpur	Bhandara					6th Y.O.	30.000	1	30.000	1111 (Model-3) (Old)	17845	**5.73**	Sakoli	Sakoli	Sangadi	455/3,4,5	N 20°58'06.81" E 79°59'17'81"	Forest Land	Non Tribal
93	Nagpur	Bhandara	Diversion of 1.71 ha. Motazad Jungale Forest Land for Extraction of Manganese in Balapur (Hamesha) in Taluka Tumsar in faver of Maganese are India Limited	11456	Gov. of India No-6 MSC/035/2012/ BHO 1964dt. 12/11/2014	1.71	6th Y.O.	3.420	1	3.420	1111 (Model-3) (Old)	17845	**0.65**	Tumsar	Tumsar	Sonegaon	63	N 21.28.565 E 79.47.831	Forest Land	Non Tribal
94	Nagpur	Bhandara	Diversion of 0.492 ha F.L. for laying OFC along Bhandara to Dewari	12333	Pccf Mha.Gov.No Desk-17/NC/I/ID/123333/252/16_17dt. 5/7/2016	0.492	6th Y.O.	1.000	1	1.000	1111 (Model-3) (Old)	17845	**0.19**	Tumsar	Tumsar	Kisanpur/ Mohagaon	38	N 21.18.534 E 79.48.705	Forest Land	Non Tribal
			Total of Bhandara Division			**118.20**		**236.420**	**10**	**191.420**			**36.55**							

Sr. No.	Circle	Division	Name of the Project	Project ID	Final sanction	Area of the Project (ha)	Year of Operation (i.e. SYO, TYO etc.)	Projectwise total area of SYO, TYO etc.	Total No of sites w.r.t. col. 12	Area of maintenance of plantation at each site	Plantation model being used (no. of plants per ha.)	Rate/ ha (Rs)	Amount (Rs. Lakhs)	Details of Area under treatment						
														Range	Round	Beat	Compartment no.	Latlong	Whether forest land or non - forest land	Whether tribal /remote area or non-tribal area
1	2	3	4	5	6	7	8	9	10	11	12	13	14	15	16	17	18	19	20	21
95	Nagpur	Wardha	Dindora Barrage K.T. Weir project in wardha and chandrapur	1938	G.I.O8-185/97-FCdt. 24.07.2013	95.81	6th Y.O.	9.000	1	9.000	400+ 1100	24402	**2.35**	Hingni	Kelzar	Kelzar	janglapur 56	N-20.85181 E-78.75736	Forest Land	Non Tribal
	Nagpur	Wardha					6th Y.O.	15.000	1	15.000	400+ 1100	24402	**3.92**	Hingni	Seloo	Seloo	chichghat91	N-20.78796 E-78.74543	Forest Land	Non Tribal
			Total for Wardha Division			**95.81**		**24.000**	**2**	**24.000**			**6.27**							
			Total 6th Y.O.			**343.64**		**431.571**	**30**	**386.570**			**73.47**							
97	Nagpur	Nagpur	National Highway No.7 (MP/Maharashtra Border to Mansar)	11462	GOI8-64/2013-FC dt. 15/05/2015	49.246	7th Y.O.	100.000	1	25.000	1111 (Model-3) (Old)	17845	**4.77**	South Umred	Nandra	Chikhaldhokda	383 RF	N 20 74 18 89 E 079 16 80 81	Forest Land	Non Tribal
98	Nagpur	Nagpur					7th Y.O.		1	25.000		17845	**4.77**	South Umred	Chargaon (Mu)	Mandwa	389 PF	N 20 44 53 63 E 079 16 15 56	Forest Land	Non Tribal
99	Nagpur	Nagpur					7th Y.O.		1	25.000		17845	**4.77**	South Umred	Botezari	Salebhati	350 RF	N 20 68 19 14 E 079 31 36 35	Forest Land	Non Tribal
100	Nagpur	Nagpur					7th Y.O.		1	25.000		17845	**4.77**	South Umred	Umred	Mangrur	356 RF	N 20 45 24 E 079 19 33	Forest Land	Non Tribal
101	Nagpur	Nagpur	132 KV Hingana Lendra tap line	2763	GOINo.6-MHC 037/2008-BHO/ 1308dt. 19/08/2013	8.838	7th Y.O.	17.680	1	17.680	400+ 1100	12478	**2.36**	Butibori	Khapri	Jamgad	336		Forest Land	Non Tribal
102	Nagpur	Nagpur	Outer Ring Road of Nagpur city from km 62.350 to 83.380 for 4/6 laning of proposed Ngp Bypass NHAI	11666	GOINo.6-MHB- 14/ 2008-BHO/ 1517dt. 17/09/2013	3.68	7th Y.O.	7.360	1	7.360	400+ 1100	12478	**0.98**	Katol	Katol	Khandala	48 PF	N 21 14 55 E 78 31 39	Forest Land	Non Tribal
103	Nagpur	Nagpur	Cons. Of strenthening & amp: widening ogvExisting 2 Lane to 4 Lane NH-69 (Nagpur-Saoner)	12036	GOINo.6-MHB- 141/ 2011-BHO/ 426dt. 21/02/2014	2.078	7th Y.O.	4.160	1	4.160	400+ 1100	12478	**0.56**	Khapa	Nagalwadi	Raiwadi	713 RF	N 21 55 333 E 78. 933 478	Forest Land	Non Tribal
104	Nagpur	Nagpur	Laying of Drinking water pipeline to nag city under Jawaharlal Nehru National Urban Renewal Mission	12222	GOMNo.FLD-3413/ CR-177/ F-10 dt. 5/7/2013	0.20	7th Y.O.	1.000	1	1.000	1111 (Model-3) (Old)	17845	**0.19**	Katol	Katol	Khandala	48 PF	N 21 14 48 E 78 31 49	Forest Land	Non Tribal
			Total of Nagpur division			**64.042**		**130.200**	**5**	**130.200**			**23.18**							

Sr. No.	Circle	Division	Name of the Project	Project ID	Final sanction	Area of the Project (ha)	Year of Operation (i.e. SYO, TYO etc.)	Projectwise total area of SYO, TYO etc.	Total No of sites w.r.t. col. 12	Area of maintenance of plantation at each site	Plantation model being used (no. of plants per ha.)	Rate/ ha (Rs)	Amount (Rs. Lakhs)	Details of Area under treatment						
														Range	Round	Beat	Compartment no.	Latlong	Whether forest land or non - forest land	Whether tribal /remote area or non-tribal area
1	2	3	4	5	6	7	8	9	10	11	12	13	14	15	16	17	18	19	20	21
105	Nagpur	Bhandara	Diversion of 19.6702 ha. Zudapi Forest land for laying of 765 KV Tirida to Koradi Tr. line	12243	GOINo-6-MHC-066/2012-BHO/1045dt. 20/5/14	19.67	7th Y.O.	14.000	1	14.000	1111 (Model-3) (Old)	17845	**2.67**	Jamkandri	Mangarli	Mangarli	38	N 21,20,09.57 E 079,33,22.50.	Forest Land	Non Tribal
106	Nagpur	Bhandara	Diversion of 6.5589 ha (5.2584 ha and 1.3005 ha for safety zone) R.F. land of compt No. 189-Pavri kynite mines girola in Bhandara Dist.	11858	GOIno-6-MHC080/2011-BHO/1729dt. 25/10/12	6.558	7th Y.O.	2.000	1	2.000	1111 (Model-3) (Old)	17845	**0.38**	Lakhani	Jambhdi	Jambhadi	34 Z.J.	N 21,20,09.57 E 079,33,22.50.	Forest Land	Non Tribal
107	Nagpur	Bhandara	Realignment proposal for diversion of 9.124 ha. F.L.for Const. of Karaj Kheda life Irri. Project-Tekepar	2027 (22)	GOINo-6-MHC010/2007/BHO/1752dt. 31/10/12	9.124	7th Y.O.	18.030	1	18.030	1111 (Model-3) (Old)	17845	**3.44**	Sakoli	Umri	Umri	149/2	N 21.23'.47.64' E 79.34'05.30"	Forest Land	Non Tribal
			Total of Bhandara Division			**35.352**		**34.030**	**3**	**34.030**			**6.50**							
108	Nagpur	Gondia	Diversion of 16.6226 ha forest land for 765 KV Raipur Pooling Station Wardha	12244	G.O.IF.No.8-80/2013-FC21.04. 2014	16.623	7th Y.O.	20.000	1	20.000	2500 (Model-1) (New)	17845	**3.82**	Gondia	Gondia	Gondia	Navargaon (Ku)323/2, 349	N-21.28.173, E-80.15.901	Forest Land	Non Tribal
109	Nagpur	Gondia					7th Y.O.	13.250	1	13.250		17845	**2.53**	Gondia	Gondia	Rajegaon	Changera 317, 637, 638	N-21.34.450, E-80.14.460	Forest Land	Non Tribal
110	Nagpur	Gondia	Pindekepar M.I.Tank	2075 (1A)		45.784	7th Y.O.	13.560	1	13.560		17845	**2.59**	Gondia	Goregaon	Mohadi	Gidhadi 206, 207	N-21.18.431, E-80.17.419	Forest Land	Non Tribal
			Total of Gondia Division			**62.407**		**46.810**	**3**	**46.810**			**8.94**							
111	Nagpur	Wardha	Laying of 400 kv. D/c T/L from Warora to Wardha	12112	G.O.I6-MHB--90/2012-BHO-1845dt. 07.11.2013	3.18	7th Y.O.	3.500	1	3.500	400+ 1100	12478	**0.47**	Talegaon	Sarwadi	Sarwadi	76 PF	N-21.14158 E78.28588	Forest Land	Non Tribal
112	Nagpur	Wardha	Diversion of 0.30 ha. Forest land for laying undrground Optical Fibre Cable line from Talegaon Hill Forest Area Nagpur Amravati Road NH-6	12333	G.I.OD-17/NC/1/1977dt . 05.03.2014	0.30	7th Y.O.	1.000	1	1.000	400+ 1100	12478	**0.13**	Talegaon	Sarwadi	Sarwadi	76 PF	N-21.14199 E-78.28333	Forest Land	Non Tribal
			Total for Wardha Division			**3.48**		**4.500**	**2**	**4.500**			**0.60**							
			Total 7th Y.O.			**165.28**		**215.540**	**13**	**215.540**			**39.22**							

Sr. No.	Circle	Division	Name of the Project	Project ID	Final sanction	Area of the Project (ha)	Year of Operation (i.e. SYO, TYO etc.)	Projectwise total area of SYO, TYO etc.	Total No of sites w.r.t. col. 12	Area of maintenance of plantation at each site	Plantation model being used (no. of plants per ha.)	Rate/ ha (Rs)	Amount (Rs. Lakhs)	Details of Area under treatment						
														Range	Round	Beat	Compartment no.	Latlong	Whether forest land or non - forest land	Whether tribal /remote area or non-tribal area
1	2	3	4	5	6	7	8	9	10	11	12	13	14	15	16	17	18	19	20	21
113	Nagpur	Gondia	Power Grid 400 KV Raypur Wardh Transmishn Line	11920	G.O.IF.No.8-57/2011-FC Dt. 17/09/2012	100.908	8th Y.O.	12.000	1	12.000	625 Model No 4. (Aided Natural Regeneration)	12499	**1.60**	North Deori	Mulla	Wadegaon	Borgaon-1 1627/2	N-21.07.119, E-80.22.202	Forest Land	Non Tribal
114	Nagpur	Gondia					8th Y.O.	8.000	1	8.000		12499	**1.07**	North Deori	Mulla	Wadegaon	Borgaon-2 1627/1	N-21.06.783, E-80.21.958	Forest Land	Non Tribal
			Total of Gondia Division			**100.908**		**20.000**	**2**	**20.000**			**2.67**							
			Total 8th Y.O.			**100.908**		**20.000**	**2**	**20.000**			**2.67**							
118	Nagpur	Nagpur	Village Gavsi Manapur to Gondkhairi, Gumgaon to Salai Dhabha Road Project	2516	GOI8B/174/2000-FCW/ 244 dt. 4/2/2008	2.760	9th Y.O.	5.520	1	5.520	400+ 1100	6864	**0.41**	Katol	Katol	Khandala	48 PF	N 21 14 51 E 78 31 44	Forest Land	Non Tribal
119	Nagpur	Nagpur	Tail Distributary of Sirsi Nala Project Taluka Umrer	11671	GOI6MHB0921/2008 - BHO/1241 dt. 19/05/2009	0.335	9th Y.O.	1.000	1	1.000	400+ 1100	6864	**0.07**	Katol	Katol	Khandala	48 PF	N 21 14 32.6 E 078 32 07.7	Forest Land	Non Tribal
120	Nagpur	Nagpur	Village Maharkund Approach Road to Veet Rag Homes, Nagpur	11557	GOI6MHB121/2008 / 1439dt. 26/07/2010	0.420	9th Y.O.	0.840	1	0.840	400+ 1100	6864	**0.06**	Katol	Katol	Khandala	48 PF	N 21 14 46 E 78 31 49	Forest Land	Non Tribal
			Total of Nagpur division			**3.515**		**7.360**	**3**	**7.360**			**0.54**							
			Total 9th Y.O.			**3.515**		**7.360**	**3**	**7.360**			**0.54**							
124	Nagpur	Nagpur	Renewal of Stone Quarry Sur. No. (383 - Old & 385 - Old) (437 - New & 438 - New) at vill. Panchgaon, Tal. Umred, Shri. M. N. Sambare.	11762	GOI6-MHC036/2009-BHO/ 3028dt. 05/05/2011	0.99	10th Y.O.	1.000	1	1.000	400+ 1100	6864	**0.07**	North Umrer	Lohara	Lohara-1	369	N 20 48 38.00 E 79 13 42.00	Forest Land	Non Tribal
125	Nagpur	Nagpur	Construction of Katol ROB near Katol Rly Stn. on Nagpur-Katol Jalalkheda Road	11726	GOI6-MHB068/2009-BHO/ 2524 dt. 24/01/2011	0.12	10th Y.O.	1.000	1	1.000	400+ 1100	6864	**0.07**	Katol	Katol	Khandala	48	N 21 15 15 7 E 78 31 34	Forest Land	Non Tribal
126	Nagpur	Nagpur	Construction 765 KV Seoni- Wardha Trans Line (Total 36.486 ha.)	11355	GOI6-MHC055/2007/BHO/826dt. 16/04/2008	6.304	10th Y.O.	4.864	1	4.864	400+ 1100	6864	**0.36**	Narkhed	Banor	Ambada	2	N 21 33 33 45 E 78 29 90 99	Forest Land	Non Tribal
			Total of Nagpur division			**7.414**		**6.864**	**3**	**6.864**			**0.50**							

Sr. No.	Circle	Division	Name of the Project	Project ID	Final sanction	Area of the Project (ha)	Year of Operation (i.e. SYO, TYO etc.)	Projectwise total area of SYO, TYO etc.	Total No of sites w.r.t. col. 12	Area of maintenance of plantation at each site	Plantation model being used (no. of plants per ha.)	Rate/ ha (Rs)	Amount (Rs. Lakhs)	Details of Area under treatment						
														Range	Round	Beat	Compartment no.	Latlong	Whether forest land or non - forest land	Whether tribal /remote area or non-tribal area
1	2	3	4	5	6	7	8	9	10	11	12	13	14	15	16	17	18	19	20	21
127	Nagpur	Gondia	Construction of Nerala (pagora) lift irrigation project	11529	G.O.I6MHC0531/2009-BHO/3461 dt. 26.07. 2011	36.820	10th Y.O.	25.000	1	25.000	400+ 1100	6864	**1.84**	Gondia	Gondia	Rawanvadi	Bagholi 162,163	N-21.34.422, E-80.12.138	Forest Land	Non Tribal
128	Nagpur	Gondia					10th Y.O.	24.000	1	24.000	400+ 1100	6864	**1.76**	Gondia	Gondia	Dasgaon	Katgtola 1180	N-21.34.944, E-80.19.575	Forest Land	Non Tribal
129	Nagpur	Gondia					10th Y.O.	24.640	1	24.640	400+ 1100	6864	**1.81**	Gondia	Gondia	Dasgaon	Katgtola 1180	N-21.34.407, E-80.20.011	Forest Land	Non Tribal
			Total of Gondia Division			**36.820**		**73.640**	**3**	**73.640**			**5.41**							
130	Nagpur	Wardha	Construction of 765 KV Seoni to Wardha CKT-II Transmission Line project	11904	G.I.O6 MHC 006/2011-BHO/ 3360 dt. 11.07.2011	37.47	10th Y.O.	25.000	1	25.000	400+ 1100	6864	**1.84**	Samudrapur	Samudrapur	Jam	menkhat,65.65,66,69	N-20.63620 E-78.89446	Forest Land	Non Tribal
	Nagpur	Wardha					10th Y.O.	25.000	1	25.000	400+ 1100	6864	**1.84**	Samudrapur	Kora	Nandori	Kawtha,128	N-20.53444 E-79.00299	Forest Land	Non Tribal
	Nagpur	Wardha					10th Y.O.	25.000	1	25.000	400+ 1100	6864	**1.84**	Samudrapur	Girad	Dhondgaon	Saygavhan, 93/1	N-20.58093 E-79.05271	Forest Land	Non Tribal
			Total for Wardha Division			**37.47**		**75.000**	**3**	**75.000**			**5.51**							
			Total 10th Y.O.			**81.71**		**155.504**	**9**	**155.504**			**11.42**							
			Grand total of Nagpur Circle			**1972.07**		**1202.495**	**119**	**1657.672**			**370.87**							
1	Nashik	East Nashik	Diversion of 7.89 ha.Of forest land for construction of storage Tank at Savargaon Tal.Niphad Dist.Nashik	12583	Regional OfficeFC-II/MH-79/2018-NGP/5673dt. 30.08.2019	6.000	SYO	6.000	1	6.000	1111 (Model-4) (New)	35697	**2.29**	Yeola	Manmad	Visapur	525	20.18004 74.41131	Forest land	Non Tribal
2	Nashik	East Nashik				1.890	SYO	1.890	1	1.890	1111 (Model-4) (New)	35697	**0.72**			Rajapur		20.17626 74.62251		Non Tribal
			Total SYO			**7.89**		**7.890**	**2**	**7.890**			**3.01**							
1	Nashik	East Nashik	Power graid corporation of india 400 KV DC(Quad) Aurangabad Boisar	12352	MOEFIn Principale Sanction No FC-III/MH-01/2015-NGP/210 dt. 07.08.2015	141.67	4th Y.O.	229.000	1	40.000	1111 (Model-3) (Old)	17845	**7.64**	Nandgaon	Nandgaon	Hinganvadi 1	363	20.69646 77.60786	forest land	Non Tribal
	Nashik	East Nashik					4th Y.O.		1	30.000		17845	**5.73**	Nandgaon	Talwade	sakora	368	20.31457 74.66495		Non Tribal
	Nashik	East Nashik					4th Y.O.		1	26.000		17845	**4.96**	Nandgaon	Kasari	kasari	506	20.23215 74.75530		Non Tribal
	Nashik	East Nashik					4th Y.O.		1	25.000		17845	**4.77**	Nandgaon	Kasari	chandanpuri	496	20.52179 74.53453		Non Tribal
	Nashik	East Nashik					4th Y.O.		1	25.000		17845	**4.77**	Nandgaon	Nyadongari	Nyaydongari-1	475	20.35029 74.83434		Non Tribal
	Nashik	East Nashik					4th Y.O.		1	25.000		17845	**4.77**	Nandgaon	Nyadongari	Nyaydongari-2	475	20.32432 74.83420		Non Tribal
	Nashik	East Nashik					4th Y.O.		1	30.000		17845	**5.73**	Nandgaon	Nyadongari	Nyaydongari-3	475	20.30431 74.83358		Non Tribal
	Nashik	East Nashik					4th Y.O.		1	28.000		17845	**5.35**	Nandgaon	Nyadongari	Nyaydongari-4	475	20.30315 74.83205		Non Tribal

Sr. No.	Circle	Division	Name of the Project	Project ID	Final sanction	Area of the Project (ha)	Year of Operation (i.e. SYO, TYO etc.)	Projectwise total area of SYO, TYO etc.	Total No of sites w.r.t. col. 12	Area of maintenance of plantation at each site	Plantation model being used (no. of plants per ha.)	Rate/ ha (Rs)	Amount (Rs. Lakhs)	Details of Area under treatment						
														Range	Round	Beat	Compartment no.	Latlong	Whether forest land or non - forest land	Whether tribal /remote area or non-tribal area
1	2	3	4	5	6	7	8	9	10	11	12	13	14	15	16	17	18	19	20	21
2	Nashik	East Nashik	Diversion of 64.24 Ha.of forest land for Const. Manjarpada Diversion Scheme in Nashik Dist. of MH	11864	MOEFF.No.8-8/2010 FC25.10.2017	64.24	4th Y.O.	11.250	1	11.250	1111 (Model-3) (Old)	17845	**2.15**	Dindori	Rashegaon	Warvandi	Gat No.191	19.40920 74.38438	forest land	Non Tribal
			Total for East Nashik Division						**9**	**240.250**			**45.87**							
3	Nashik	Ahmednagar	Booster pumping station for water supplu at Dehere village by MIDC A'Nagar	12440	Govt. of India, Site Office, NagpurFLD-1816/CR-318/F-10dt. 27.02.2017	0.66	4th Y.O.	1.320	1	1.320	625 (Model-5) (Old)	17845	**0.25**	Parner	Parner	Ralegansiddhi	359	18.55305 74.24587	Forest Land	Non Tribal
3	Nashik	Malegaon	108 ft hug. Digamber Jain Statu for Construction of Road Electric Line, Water pipeline,parking shade, Murti platform etc.at village Bilwad (mangi-tungi)	12419	G.O..I.F-No.FC-1/MH-23/2016 - NGP/3195dt. 2/2/2018	2.730	4th Y.O.	2.730	1	2.730	1111 (Model-3) (Old)	17845	**0.52**	Malegaon	Galna	Dongrale	Gat No. 102	N.20.796683 E.74.604425	Non Forest Land	Non Tribal
4	Nashik	Sangamner	400 KV Bableshwar to Kadus Transmission Line	12442	GOINo.FC-III/MH-11/2016-NGP/ 2561dt. 21/9/2017	150.432	4th Y.O.	183.000	1	10.000	1111 (Model-3) (Old)	17845	**1.91**	Sangamner I	Ghargaon	Ghargaon	187	19.175337 74.095769	Forest Land	Non Tribal
	Nashik	Sangamner					4th Y.O.		1	5.000		17845	**0.95**	Sangamner I	Pemgiri	Nimaj	212 e	19.2834 74.1246	Forest Land	Non Tribal
	Nashik	Sangamner					4th Y.O.		1	25.000		17845	**4.77**	Sangamner II	Warwandi	Khambe	Comp.No 238	N19 25 44.25 E 74 19 11.62	Forest Land	Non Tribal
	Nashik	Sangamner					4th Y.O.		1	10.000		17845	**1.91**	Sangamner II	Sangamner	Karhe	S.No.262, Comp.No 196	N 19 43 24.74 E 74 11 01.66	Forest Land	Non Tribal
	Nashik	Sangamner					4th Y.O.		1	10.000		17845	**1.91**	Sangamner II	Warwandi	Kauthe Malkapur	S.No.186 Comp.No 235	19.2245 74.2134	Forest Land	Non Tribal
	Nashik	Sangamner					4th Y.O.		1	15.000		17845	**2.86**	Sangamner II	Warwandi	Kauthe Malkapur	Comp.No 235	N 19 22 48.10 E 74 21 38.20	Forest Land	Non Tribal

Sr. No.	Circle	Division	Name of the Project	Project ID	Final sanction	Area of the Project (ha)	Year of Operation (i.e. SYO, TYO etc.)	Projectwise total area of SYO, TYO etc.	Total No of sites w.r.t. col. 12	Area of maintenance of plantation at each site	Plantation model being used (no. of plants per ha.)	Rate/ ha (Rs)	Amount (Rs. Lakhs)	Details of Area under treatment						
														Range	Round	Beat	Compartment no.	Latlong	Whether forest land or non - forest land	Whether tribal /remote area or non-tribal area
1	2	3	4	5	6	7	8	9	10	11	12	13	14	15	16	17	18	19	20	21
	Nashik	Sangamner	400 KV Bableshwar to Kadus Transmission Line	12442	GOINo.FC-III/MH-11/2016-NGP/ 2561dt. 21/9/2017	150.432	4th Y.O.		1	21.000	1111 (Model-3) (Old)	17845	**4.01**	Sangamner III	Sakur	Pimpalgaon Depa	Comp.No 225	N 19 24 25.91 E 74 15 40.87	Forest Land	Non Tribal
	Nashik	Sangamner					4th Y.O.		1	25.000		17845	**4.77**	Akole T	Lingdeo	Pisewadi	S.No.162, Comp.No 146	N 19 23 27.35 E 74 02 19.14	Forest Land	Non Tribal
	Nashik	Sangamner					4th Y.O.		1	20.000		17845	**3.82**	Akole T	Akole	Mehenduri	S.No.146, Comp.No 191	N 19 32 14.31 E 73 55 46.76	Forest Land	Non Tribal
	Nashik	Sangamner					4th Y.O.		1	7.000		17845	**1.34**	Akole T	Lingdeo	Pisewadi	S.No.63	N 19 24 09.48 E 74 01 33.13	Forest Land	Non Tribal
	Nashik	Sangamner					4th Y.O.		1	10.000		17845	**1.91**	Akole T	Akole	Manoharpur	S.No.50	N 19 30 03.18 E 74 00 52.45	Forest Land	Non Tribal
	Nashik	Sangamner					4th Y.O.		1	25.000		17845	**4.77**	Akole EGS	Samsherpur	Khirwire	Com.No.6	19.40125 73.52906	Forest Land	Non Tribal
	Nashik	Sangamner	765 KV DC Aurangabad to padgha Transmission line	12392	GOINo. D-17/NC/II/ID.12392/ (57)/ 1835/ 17-18dt. 31/10/2017	254.465	4th Y.O.	8.000	1	8.000	1111 (Model-3) (Old)	17845	**1.53**	Sangamner I	Pemgiri	Sawarchol	S.No.15, Comp.No50b	N 19 29 28.54 E 74 02 34.53	Forest Land	Non Tribal
	Nashik	Sangamner					4th Y.O.	40.000	1	40.000	1111 (Model-3) (Old)	17845	**7.64**	Akole T	Akole	Mehenduri	S.No.55, Comp.No 36,37	N 19 35 16.46 E 73 56 40.19	Forest Land	Non Tribal
5	Nashik	Sangamner	132 KV DC Alephata Ghargaon Transmission line	12190	GOIFNo6MHB-10/201-BHO/ 3439dt. 21.03.2018	1.404	4th Y.O.	2.800	1	2.800	1111 (Model-3) (Old)	17845	**0.00**	Sangamner I	Pemgiri	Sawarchol	S.No.14, Compt No.107	N 19 28 43.41 E 74 02 22.74	Forest Land	Non Tribal
			Total for Sangamner Division						**15**	**233.800**			**44.11**							
			Total 4th Y.O.			**766.03**		**478.100**	**26**	**478.100**			**90.75**							
1	Nashik	Ahmednagar	765 KV DC Aurangabad to padgha Transmission line	12392	GOIFC-III/MH-05 2015 NGP 135dt. 23.08.2016	254.465	6th Y.O.	139.000	1	28.000	1111 (Model-3) (Old)	17845	**5.35**	Takali Dhokeshwar	Wankute	Gazdipur	332/68P	19.144651, 74.292283	Forest Land	Non Tribal
	Nashik	Ahmednagar					6th Y.O.		1	30.000	1111 (Model-3) (Old)	17845	**5.73**	Takali Dhokeshwar	Takali Dhokeshwar	Dhotre bk.	340/42,43	19.10781, 74.28255		Non Tribal
	Nashik	Ahmednagar					6th Y.O.		1	30.000	1111 (Model-3) (Old)	17845	**5.73**	Takali Dhokeshwar	Takali Dhokeshwar	Wadgaon Savatal	334A/148 to 151	19.211384 74.389139		Non Tribal
	Nashik	Ahmednagar					6th Y.O.		1	51.000	1111 (Model-3) (Old)	17845	**9.74**	Takali Dhokeshwar	Wankute	Gazdipur	332/68P	19.114138 74.260505		Non Tribal

Sr. No.	Circle	Division	Name of the Project	Project ID	Final sanction	Area of the Project (ha)	Year of Operation (i.e. SYO, TYO etc.)	Projectwise total area of SYO, TYO etc.	Total No of sites w.r.t. col. 12	Area of maintenance of plantation at each site	Plantation model being used (no. of plants per ha.)	Rate/ ha (Rs)	Amount (Rs. Lakhs)	Details of Area under treatment						
														Range	Round	Beat	Compartment no.	Latlong	Whether forest land or non - forest land	Whether tribal /remote area or non-tribal area
1	2	3	4	5	6	7	8	9	10	11	12	13	14	15	16	17	18	19	20	21
2	Nashik	Sangamner	765 KV DC Aurangabad to padgha Transmission line	12392	GOIFC-III/MH-05 2015 NGP 13529.02.2016		6th Y.O.	91.000	1	10.000	1111 (Model-3) (Old)	17845	**1.91**	Sangamner I	Chandnapuri	Hiwargaon Pathar	S.No.121, Comp.No.231	19.2052 74.1546	Forest Land	Non Tribal
	Nashik	Sangamner					6th Y.O.		1	25.000	1111 (Model-3) (Old)	17845	**4.77**	Sangamner II	Warwandi	Khambe	S.No.116, Comp.No.238	19.2327 74.2354		Non Tribal
	Nashik	Sangamner					6th Y.O.		1	11.000	1111 (Model-3) (Old)	17845	**2.10**	Sangamner II	Kokangaon	Kokangaon	S.No.102,103,104, Comp.No.208	19.3543 74.3543		Non Tribal
	Nashik	Sangamner					6th Y.O.		1	20.000	1111 (Model-3) (Old)	17845	**3.82**	Sangamner III	Sakur	Sakur	S.No.850, Comp.No.238	19.2450 73.1644		Non Tribal
	Nashik	Sangamner					6th Y.O.		1	25.000	1111 (Model-3) (Old)	17845	**4.77**	Sangamner III	Saykhindi	Kharshinde	S.No.42, Comp.No.237	19.2708 74.2508		Non Tribal
	Nashik	Sangamner	OFC Cable Laying along the route NH-50 Pune to Nashik	11625	PCCF Office NagpurDesk-17 Nodal/ID-11625 (10) 1385 Nagpur dt. 30.10.2015	5.60	6th Y.O.	1.000	1	1.000	1111 (Model-3) (Old)	17845	**0.19**	Sangamner I	Pemgiri	Sawarchol	S.No.14, Compt No.107	19.2708 74.2508		Non Tribal
			Total 6th Y.O.			**260.07**		**231.000**	**10**	**231.000**			**44.11**							
1	Nashik	West Nashik	Diversion of forest land Nashik -Sinnar by pass 4th lane	11989 (12)	Govt.of India6-MHB/ 90/2011-BHO/1046dt. 19.05.2014	3.40	7th Y.O.	3.400	1	3.400	400 (Model-4) (Old)	17845	**0.58**	Sinnar	Vadgaon Pingala	Sinnar	338 Part	N 19 53 461 E 73 55 953	Non Forest Land	Non Tribal
2	Nashik	Sangamner	NH-50 from khed to Sinner 4 Laining Project Sangamner	12323	No.6-MHC-29/2014-BHO 106 dt. 6/16/2015	359.93	7th Y.O.	68.000	1	5.000	625 (Model-5) (Old)	17845	**0.95**	Sangamner I	Pemgiri	Nimaj	215	19.2927 74.1547	Forest Land	Non Tribal
	Nashik	Sangamner					7th Y.O.		1	7.000	625 (Model-5) (Old)	17845	**1.34**	Sangamner I	Pemgiri	Nimaj	215	19.2917 74.1550		Non Tribal
	Nashik	Sangamner					7th Y.O.		1	8.000	625 (Model-5) (Old)	17845	**1.53**	Sangamner I	Pemgiri	Nimaj	215	19.2911 74.1550		Non Tribal
	Nashik	Sangamner					7th Y.O.		1	10.000	625 (Model-5) (Old)	18696	**2.00**	Akole EGS	Tirde	Tirde	221,222	19.41427 73.50920		Tribal

Sr. No.	Circle	Division	Name of the Project	Project ID	Final sanction	Area of the Project (ha)	Year of Operation (i.e. SYO, TYO etc.)	Projectwise total area of SYO, TYO etc.	Total No of sites w.r.t. col. 12	Area of maintenance of plantation at each site	Plantation model being used (no. of plants per ha.)	Rate/ ha (Rs)	Amount (Rs. Lakhs)	Details of Area under treatment						
														Range	Round	Beat	Compartment no.	Latlong	Whether forest land or non - forest land	Whether tribal /remote area or non-tribal area
1	2	3	4	5	6	7	8	9	10	11	12	13	14	15	16	17	18	19	20	21
	Nashik	Sangamner	NH-50 from khed to Sinner 4 Laining Project Sangamner	12323			7th Y.O.		1	7.000	625 (Model-5) (Old)	17845	**1.34**	Sangamner III	Sakur	Pimpalgaon Depa	225	19.2758 74.1421	Forest Land	Non Tribal
	Nashik	Sangamner					7th Y.O.		1	4.000	625 (Model-5) (Old)	17845	**0.76**	Sangamner III	Sakur	Pimpalgaon Depa	225	19.2754 74.1425		Non Tribal
	Nashik	Sangamner					7th Y.O.		1	4.000	625 (Model-5) (Old)	17845	**0.76**	Sangamner III	Sakur	Pimpalgaon Depa	225	19.2803 74.1421		Non Tribal
	Nashik	Sangamner					7th Y.O.		1	10.000	625 (Model-5) (Old)	17845	**1.91**	Sangamner I	Chandanapuri	Chandanapuri	163	19.2226 74 1252		Non Tribal
	Nashik	Sangamner					7th Y.O.		1	5.000	625 (Model-5) (Old)	17845	**0.95**	Sangamner II	Wadgaon Pan	Nimgaon Jali	208	19 35 48 74 2215		Non Tribal
	Nashik	Sangamner					7th Y.O.		1	5.000	625 (Model-5) (Old)	18696	**1.00**	Akole T	Lingdeo	Pisewadi	146	19 2410 74 0129		Tribal
	Nashik	Sangamner					7th Y.O.		1	3.000	625 (Model-5) (Old)	17845	**0.57**	Sangamner I	Javle Baleshwar	Javle Baleshwar	172	19 2531 74 0452		Non Tribal
			Total 7th Y.O.			**363.33**		**71.400**	**12**	**71.400**			**13.70**							
1	Nashik	East Nashik	Daraswadi feeder canal	11560	MoEF 6-MHC 021/201-BHO/290dt. 13.02.2013	263.195	8th Y.O.	16.000	1	16.000	400+ 1100	6864	**1.18**	yeola	Rajapur	yeola	200	20.04363 74.48318	Forest Land	Non Tribal
2	Nashik	Ahmednagar	Daraswadi feeder canal	11560	6-MHC 021/201-BHO/290dt. 13.02.2013	263.195	8th Y.O.	7.940	1	7.940	400 (Model - 400+1100)	6864	**0.58**	Takali Dhokeshvar	Takali Dhokeshvar	karjule Harya	337	19.091799 74.195891		Non Tribal
3	Nashik	Malegaon	Construction of 220 KV D/C Transmission line from Gangapur	11901	MoEF6-MHC 025/2011-BHO/987dt. 20.06.2013	3.000	8th Y.O.	3.000	1	3.000	400+ 1100	6864	**0.22**	Taharabad	Mulher	Mulher	174,175, 182,183	N.20.758714 E.74.0743382	Forest Land	Tribal
			Total 8th Y.O.			**529.39**		**26.940**	**3**	**26.940**			**1.98**							
4	Nashik	Sangamner	pimpalgaon khand	11933	GOINo.6-MHC004/2011-BHO/860Dt. 21/5/2012	37.80	9th Y.O.	37.800	1	37.800	1111 (Model-3) (Old)	17845	**7.22**	Sangamner-1	Hivargaon pathar	Shendewadi	60pt,61pt,62pt,63pt, 64pt	18 2921 73 3548	Non Forest Land	Non Tribal
			Total 9th Y.O.			**37.80**		**37.800**	**1**	**37.800**			**7.22**							

Sr. No.	Circle	Division	Name of the Project	Project ID	Final sanction	Area of the Project (ha)	Year of Operation (i.e. SYO, TYO etc.)	Projectwise total area of SYO, TYO etc.	Total No of sites w.r.t. col. 12	Area of maintenance of plantation at each site	Plantation model being used (no. of plants per ha.)	Rate/ ha (Rs)	Amount (Rs. Lakhs)	Details of Area under treatment						
														Range	Round	Beat	Compartment no.	Latlong	Whether forest land or non - forest land	Whether tribal /remote area or non-tribal area
1	2	3	4	5	6	7	8	9	10	11	12	13	14	15	16	17	18	19	20	21
5	Nashik	East Nashik	Manikpunj Medium Project	11776 (11)	MoEF2696dt. 15.3.2011	211.78	10th Y.O.	34.030	1	23.000	400+ 1100	6864	**1.69**	Nandgaon	Kasari	Kasari	513	20.00996 75.13151	Forest Land	Non Tribal
6	Nashik	East Nashik					10th Y.O.		1	11.030	400+ 1100	6864	**0.81**	Yeola	Manmad	vinchor	298	20.10761 74.45658		Non Tribal
			Total 10th Y.O.			**211.78**		**34.030**	**2**	**34.030**			**2.50**							
			Grand total of Nashik circle			**2176.29**		**887.160**	**56**	**887.160**			**163.27**							
1	Pune	Bhor	Datt Temple Ecotourism Bhambavade	Desk-17/NC/II/I.D. 12427/(16)/2293/15-16 Dt.11.03.2016	GOI FC-I/MH-16/2016 NGP 3641dt. 5.5.2018	0.530	TYO	1.000	1	1.060	2500 (Model-1) (Old)	33440	**0.38**	Nasarapur	Nasarapur	Nasarapur	347	18.240235 73.867322	Forest Land	Non Tribal
2	Pune	Bhor	Ecotourism - Bholavade	Desk-17/NC/II/I.D. 12426/(16)/2292/15-16 Dt.11.03.2016	GOI FC-I/MH-25/2016 NGP 3440dt. 21.3.2018	0.203	TYO		1	0.406	2500 (Model-1) (Old)	33440	**0.15**	Nasarapur	Nasarapur	Nasarapur	348	18.240235 73.867322	Forest Land	Non Tribal
			Total TYO			**0.73**		**1.000**	**2**	**1.466**			**0.52**							
1	Pune	Pune	Diversion of 0.17 ha Restored forest land in favour of M/S Liebherr CMC tec India Private Limited for construction of an approach road to access the land of User Agency in Pune District in the State of Maharashtra- Regarding	12411	Regional APCCF of G.O.IF.No FC-/MH-35/2016-NGP/G18/1923 dt. 6/14/2017	0.170	4th Y.O.	1.000	1	1.000	625 (Model-5) (Old)	17845	**0.19**	Dound	Varvand	Kangoan	464	N-18444528 E-74371518	Forest Land	Non Tribal
2	Pune	Pune					4th Y.O.	0.400	1	0.400	625 (Model-5) (Old)	17845	**0.08**	Dound	Varvand	Kangoan	464	N-18444528 E-74371518	Forest Land	Non Tribal
			Total 4th Y.O.			**0.17**		**1.400**	**2**	**1.400**			**0.27**							

Sr. No.	Circle	Division	Name of the Project	Project ID	Final sanction	Area of the Project (ha)	Year of Operation (i.e. SYO, TYO etc.)	Projectwise total area of SYO, TYO etc.	Total No of sites w.r.t. col. 12	Area of maintenance of plantation at each site	Plantation model being used (no. of plants per ha.)	Rate/ ha (Rs)	Amount (Rs. Lakhs)	Details of Area under treatment						
														Range	Round	Beat	Compartment no.	Latlong	Whether forest land or non - forest land	Whether tribal /remote area or non-tribal area
1	2	3	4	5	6	7	8	9	10	11	12	13	14	15	16	17	18	19	20	21
1	Pune	Pune	Diversion of 0.54 ha. of Reserve forest land for construction of road from Vagholi to Kharadi in Pune District (Pune Municiple Corporation Pune)	12409	State Govt.FLD-1916/CR-100/F-10dt. 11/8/2016	0.540	5th Y.O.	1.080	1	1.080	625 (Model-5) (Old)	17845	**0.21**	Pune	Lonikalbhor	Hadpsar	104, 98	N 18 49 8952 E - 73 91 4226	Forest Land	Non Tribal
2	Pune	Pune	Diversion of 0.894 ha. of Reserve forest land for development of shree Mhasoba Bhairav Nath Kalubai Shankar Mandir Trust Kharawade Ta. Mulshi in Pune District	11287	Central Govt6MHB178 2007-BHO 670 (stage1 approval6MHB 178 2007 BHO/457)dt. 21/4/2010 (27/02/2008)	0.894	5th Y.O.	1.500	1	1.500	400 (Model-4) (Old)	17845	**0.29**	Paud	Paud	Mutha	33/1	N 18 28 00 E - 73.34.49.	Forest Land	Non Tribal
3	Pune	Junnar	Deversion of 50.08 ha of forest land for constructin of Gunjavani irrigatin project in Pune district, Maharashtra -reg.	2338	APCCF of G.O.I. F No.8-85/2000-FC Fno. 8-85/2000 FC	50.08	5th Y.O.	26.470	1	11.470	1111 (Model-3) (Old)	17845	**2.19**	Shirur	Shirur	Malthan	Gat No. 162	N 18.82269 E 74.249209	Non Forest Land	Non Tribal
4	Pune	Junnar					5th Y.O.		1	15.000	400 (Model-4) (Old)	17845	**2.86**	Otur	Otur	Udapur	Gat No. 225,226,238	N 19.307097 E 73.95608	Non Forest Land	Non Tribal
			Total 5th Y.O.			**51.514**		**29.050**	**4**	**29.050**			**5.55**							
1	Pune	Pune	Gunjawani Irrigation Project	2338	MoEF8-85/2000-FCdt. 6/13/2016	50.08	6th Y.O.	7.460	1	7.460	400 (Model-4) (Old)	17845	**1.42**	Daund	Yavat	Yavat-Bhandgoan	314/1	N-18454828 E-74309808	Non Forest Land	Non Tribal
2	Pune	Pune	Diversion of 1.8407 ha forest land for non forest purpose i.e. lying of 12" diameter underground LPG pipeline along with 6" diameter OFC in Pune	12347	MoEF6-MHB-44/2014-BHO/243dt. 4/4/2016	1.8407	6th Y.O.	4.000	1	4.000	400 (Model-4) (Old)	17845	**0.76**	Pune	Lonikalbhor	Hadpsar - Hadpsar	97	N 18 49 2658 E - 73 91 2973	Forest Land	Non Tribal

Sr. No.	Circle	Division	Name of the Project	Project ID	Final sanction	Area of the Project (ha)	Year of Operation (i.e. SYO, TYO etc.)	Projectwise total area of SYO, TYO etc.	Total No of sites w.r.t. col. 12	Area of maintenance of plantation at each site	Plantation model being used (no. of plants per ha.)	Rate/ ha (Rs)	Amount (Rs. Lakhs)	Details of Area under treatment						
														Range	Round	Beat	Compartment no.	Latlong	Whether forest land or non - forest land	Whether tribal /remote area or non-tribal area
1	2	3	4	5	6	7	8	9	10	11	12	13	14	15	16	17	18	19	20	21
3	Pune	Junnar	Diversion of 0.6180 ha. Reserved Forest land for laying of 1600 mm pipeline for water supply to Pune Municipal Corporation in Pune District	12324	APCCF of G.O.I. D-17/NC/ID-12324/(15)/49/14-15 dt. 13/04/2015D-17/NC/ID/12324/15/49-14-15dt. 4/13/2015	0.618	6th Y.O.	1.000	1	1.000	2500 (Model-1) (Old)	17845	**0.19**	Chakan	Pait	Pait	S. No.87/ Gat No. 172	N18.913436 E73.660465	Forest Land	Non Tribal
4	Pune	Junnar	Diversion of 18.9749 ha. Of Forest land for Rehabitation and upgrading to 4 laning of NH-50 from Khed to Sinnar from Km 42/00 to 97/000	12240	APCCF of G.O.I.D-17/Nodal/2/ID.12240/(14)/1487/15-16 Dt. 10/11/2015D-17/Nodal/2ID.12240/14/1487/15-16dt. 10/11/2015	18.97	6th Y.O.	38.000	1	38.000	2500 (Model-1) (Old)	17845	**7.26**	Otur	Belhe	Pargaon Tarfe Ale	S.No. 315	N 19.04613 E 74.12099	Forest Land (Degraded)	Non Tribal
5	Pune	Bhor	Diversion Of 1.125 Ha RF land for 6 Lanning og NH4 in pune district	12366	G.O.I.6-MHB-25/2015-BHO/479dt. 19.11. 2015	1.125	6th Y.O.	2.250	1	2.250	400 (Model-4) (Old)	17845	**0.43**	Nasarapur	Nasarapur	Nasarapur	347	18.249375 73.868332	Forest Land	Non Tribal
			Total 6th Y.O.			**72.6386**		**52.710**	**5**	**52.710**			**10.06**							

Sr. No.	Circle	Division	Name of the Project	Project ID	Final sanction	Area of the Project (ha)	Year of Operation (i.e. SYO, TYO etc.)	Projectwise total area of SYO, TYO etc.	Total No of sites w.r.t. col. 12	Area of maintenance of plantation at each site	Plantation model being used (no. of plants per ha.)	Rate/ ha (Rs)	Amount (Rs. Lakhs)	Details of Area under treatment						
														Range	Round	Beat	Compartment no.	Latlong	Whether forest land or non - forest land	Whether tribal /remote area or non-tribal area
1	2	3	4	5	6	7	8	9	10	11	12	13	14	15	16	17	18	19	20	21
1	Pune	Pune	Diversion of 0.414 ha. of Reseved Forest land for laying of 400 KV D/C Aurangabad-Pune Transmission Line passing through Mindewadi, Village of Taluka Vadgaon Maval in favour of Vice President, Western Region Transmission Maharashtra Pvt. Ltd. in Pune District of Maharashtra	12184	APCCF of G.O.I.06-MHB-12/2013-BHO/1885dt. 11/13/2013	0.414	7th Y.O.	2.000	1	2.000	2500 (Model-1) (Old)	17845	**0.38**	Vadgaon	Vadgaon	Navlakh Umbare(village-Nanoli)	G. No. 103	N 18 76 9554 E - 73 70 7711	Forest Land	Non Tribal
2	Pune	Pune	Diversion of 0.65 ha. of Reseved Forest Land for construction of ground service reservator (GSR) laying of pipe line in Pune district of Maharashtra in favour of supritendent Engineer encashment water works municiple corporation, Pune	12246	State Govt.FLD-1913/CR-352/F-10dt. 11/21/2014	0.65	7th Y.O.	1.000	1	1.000	1111 (Model-3) (Old)	17845	**0.19**	pune	Lonikalbhor	Hadapsar	G. No. 98	N 18 49 2741 E - 73 91 2942	Forest Land	Non Tribal

Sr. No.	Circle	Division	Name of the Project	Project ID	Final sanction	Area of the Project (ha)	Year of Operation (i.e. SYO, TYO etc.)	Projectwise total area of SYO, TYO etc.	Total No of sites w.r.t. col. 12	Area of maintenance of plantation at each site	Plantation model being used (no. of plants per ha.)	Rate/ ha (Rs)	Amount (Rs. Lakhs)	Details of Area under treatment						
														Range	Round	Beat	Compartment no.	Latlong	Whether forest land or non - forest land	Whether tribal /remote area or non-tribal area
1	2	3	4	5	6	7	8	9	10	11	12	13	14	15	16	17	18	19	20	21
3	Pune	Pune	Diversion of 0.95 ha. Reserved Forest land for construction of Interpretation centre, approach road, staff residential quarters, rest house, security booth and office building in favour of Dy. Conservator of Forest.	12066	APCCF of G.O.I.6-MHB-54/2012-BHO/1332dt. 8/21/2013	0.95	7th Y.O.	2.000	1	2.000	625 (Model-5) (Old)	17845	**0.38**	Baramati	Baramati	Baramati	G. No. 248	N 453678 m E - 2022216 m	Forest Land	Non Tribal
4	Pune	Pune	Praposal for used of forest land for non-forest purpose i.e. diversion of 1.8407 ha. Reserved forest land for laying 12" dia. Underground Uran-Chakan-Shikharapur LPG pipeline along with 6" dia Optical fibre cable (OFC) in favour of Hindustan Petroleum corporation corporation ltd. in Dist. Pune in Maharashtra u/s 2 of the Indian Forest (Conservation)	12347	APCCF of G.O.I.6-MHB-44/2014-BHO/1507dt. 8/28/2014	1.84	7th Y.O.	4.000	1	4.000	1111 (Model-3) (Old)	17845	**0.76**	pune	Lonikalbhor	Hadapsar	G. No. 96	N 18 47 1618 E - 73 94 0074	Forest Land	Non Tribal

Sr. No.	Circle	Division	Name of the Project	Project ID	Final sanction	Area of the Project (ha)	Year of Operation (i.e. SYO, TYO etc.)	Projectwise total area of SYO, TYO etc.	Total No of sites w.r.t. col. 12	Area of maintenance of plantation at each site	Plantation model being used (no. of plants per ha.)	Rate/ ha (Rs)	Amount (Rs. Lakhs)	Details of Area under treatment						
														Range	Round	Beat	Compartment no.	Latlong	Whether forest land or non - forest land	Whether tribal /remote area or non-tribal area
1	2	3	4	5	6	7	8	9	10	11	12	13	14	15	16	17	18	19	20	21
5	Pune	Solapur	Division of 30 ha. identified Forest land for construction of Border Security Force (BSF) reserve Batalion Head Quarter in Gut No. 253 in favour of Dy Inspector General & Commandant STC BSF Latur in Solapur District of Maharashtra.	12278		60	7th Y.O.	60.000	1	60.000	1111 (Model-3) (Old)	17845	**11.46**	Sangola	Sangola	Achakdani	272		Forest Land	Non Tribal
			Total 7th Y.O.			**63.854**		**69.000**	**5**	**69.000**			**13.17**							
1	Pune	Pune	New Minor Bridge Adjacement To Existing Old Narrow Bridge On Lonawala Nive Pwd Road	11627	APCCF of G.O.I.6-MH/B41/ 2008 BHO/1029 dt. 6/22/2012	0.34	9th Y.O.	1.000	1	1.000	400+ 1100	6864	**0.07**	VADGAON	VADGAON	VADGAON-Katavi	88	N 18 44 24 E - 73,39.38	Forest Land	Non Tribal
2	Pune	Pune	Diversion Of 3.00 Ha. Of Reserved Forest And Unclassed Forest Land For Development Activities At Village Ghera Sinhagad	11972	APCCF of G.O.I.6-MH/B/091/ 2010-BHO/994dt. 6/12/2012	3.00	9th Y.O.	6.000	1	6.000	400+ 1100	6864	**0.44**	PUNE	LONI KALBHOR	LONI KALBHOR	250	N 18 43 8147 E - 74 00 5417	Forest Land	Non Tribal
3	Pune	Junnar	Percolation Tank Sal Thakarwadi	11884	APCCF of G.O.I. 6-MHB033/2011-BHO/1436 Dt. 31.08.20126-MH/B/091/ 2010-BHO/994		9th Y.O.	1.000	1	1.000	400+ 1100	6864	**0.07**	Ghodegaon	Ghodegaon	Sal	180	N 19.024729 E 73.810969	Forest Land	Tribal

Sr. No.	Circle	Division	Name of the Project	Project ID	Final sanction	Area of the Project (ha)	Year of Operation (i.e. SYO, TYO etc.)	Projectwise total area of SYO, TYO etc.	Total No of sites w.r.t. col. 12	Area of maintenance of plantation at each site	Plantation model being used (no. of plants per ha.)	Rate/ ha (Rs)	Amount (Rs. Lakhs)	Details of Area under treatment						
														Range	Round	Beat	Compartment no.	Latlong	Whether forest land or non - forest land	Whether tribal /remote area or non-tribal area
1	2	3	4	5	6	7	8	9	10	11	12	13	14	15	16	17	18	19	20	21
4	Pune	Bhor	Wagh Dongar Eco-Tourism centre at village ,Saswad, Tal-Purandhar, Dist-pune	12062	GOI 6-MHB015/2012 BHO/997dt. 12.06.2012	0.470	9th Y.O.	1.000	1	1.000	400+ 1100	6864	**0.07**	Saswad	jejuri	jejuri	532	18.421446 74.157431	Forest Land	Non Tribal
			Total 9th Y.O.			**3.81**		**9.000**	**4**	**9.000**			**0.66**							
1	Pune	Pune	Divertion Of 0.96 Ha. Forest Land For Regularization Of Already Constructed Of Harbal And Medicinal Centre	11230	APCCF of G.O.I.6MHBO/ 31/2005/BHO/2 87 dt. 2/10/2010	0.96	10th Y.O.	3.670	1	3.670	400+ 1100	6864	**0.27**	VADGAON	VADGAO N	VADGAO N-Chikhalase	88	N 18 73 3007 E - 73 577577	Forest Land	Non Tribal
2	Pune	Pune	Diversion Of 2.08 Ha Of Reserved Forest Land For Construction Of Van Bhavan Administrative Office In Favour Conservator Of Forests At Village Bhamburda In Pune District Maharashtra	11966	APCCF of G.O.I.6MHBO8 8/2010-BHO/2948 dt. 4/26/2011	2.08	10th Y.O.	4.160	1	4.160	400+ 1100	6864	**0.31**	PUNE	LONIKAL BHOR	LONI KALBHOR	73	N 18 45 3495 E - 74 05 1893	Forest Land	Non Tribal
3	Pune	Junnar	Diversion of 22.094 ha of forest land for construction of Ranjani Pimparkheda Disrtibutary no-2 & its minor in pune	1433	APCCF of G.O.I.8A/15/19 3/2- FCW 2165 dt. 11/25/2010	22.094	10th Y.O.	26.900	1	12.290	400+ 1100	6864	**0.90**	Shirur	Shirur	Malthan	532 pt	N.18.810113 E 74.281324	Forest Land	Non Tribal
4	Pune	Junnar					10th Y.O.		1	6.490	400+ 1100	6864	**0.48**	Otur	Ale	Ale	471 A	N.19.189388 E 74.144449	Forest Land	Non Tribal
5	Pune	Junnar					10th Y.O.		1	8.120	400+ 1100	6864	**0.60**	Otur	Ale	Ale	527 A	N.19.19102 E 74.147109	Forest Land	Non Tribal

Sr. No.	Circle	Division	Name of the Project	Project ID	Final sanction	Area of the Project (ha)	Year of Operation (i.e. SYO, TYO etc.)	Projectwise total area of SYO, TYO etc.	Total No of sites w.r.t. col. 12	Area of maintenance of plantation at each site	Plantation model being used (no. of plants per ha.)	Rate/ ha (Rs)	Amount (Rs. Lakhs)	Details of Area under treatment						
														Range	Round	Beat	Compartment no.	Latlong	Whether forest land or non - forest land	Whether tribal /remote area or non-tribal area
1	2	3	4	5	6	7	8	9	10	11	12	13	14	15	16	17	18	19	20	21
6	Pune	Junnar	Diversion of 0.0072 ha reserve forest land for underground pipeline. Kanifnath Sahakari Pani Purwatha Sanstha	11151	APCCF of G.O.I.6- MHB 183/2008BHO14 dt. 1/1/2009	0.0072	10th Y.O.	0.067	1	0.067	400+ 1100	6864	**0.00**	Chakan	Alandi	Koyali	271	N 18.7654934 E 73.9907842	Forest Land	Non Tribal
			Total 10th Y.O.			**25.1412**		**34.797**	**6**	**34.797**			**2.55**							
			Grand total of Pune circle			**217.86**		**196.957**	**28**	**197.423**			**32.79**							
1	Thane	Thane	Diversion of 0.58 ha forest land for construction of six lane bridge across Ulhas creek having length 980 meter on proposed Mankoli Motagaon Road	12502	GOIFC-I/MH-78/2017-NGP/5193dt. 12/4/2019	0.58	SYO	1.000	1	1.000	2500 (Model-1) (New)	54133	**0.58**	Tokawade (S)	Moroshi	Moroshi	S.N.132/1	N19 19.981 E73 42.722	Forest Land	Non Tribal
2	Thane	Thane	Diversion of 0.38 ha forest land for 5th and 6th railway lines between thane-Diva in Mumbai division of Central Railway	12589	GOIFC-I/MH-115/2018-NGP/5223 dt. 4/15/2019	0.38	SYO	1.000	1	1.000	625 (Model-5) (Old)	46801	**0.50**	Thane	Kalwa	Kalwa	S. No. 230	N19 10 44.64 E-73 20.42	Forest Land	Non Tribal
			Total for Thane Division			**0.960**		**2.000**	**2**	**2.000**			**1.08**							
3	Thane	Alibag	Diversion of 0.8878ha. Of forest land in village Dighati, Panvel Tahasil laying 12"dia LPG HPCLs Uran chakan Shikharapur LPG Gas Pipeline along OFC	12342	Reginal Office Nagpur 6-MHC/033/2014-BHO/4221dt. 9/9/2018	1.7756	SYO	1.000	1	1.776	1111 (Model-4) (New)	35697	**0.68**	Alibag	Kavir	Kavir	PF S.No. 143	N183826 E725616	Forest Land	Non Tribal

Sr. No.	Circle	Division	Name of the Project	Project ID	Final sanction	Area of the Project (ha)	Year of Operation (i.e. SYO, TYO etc.)	Projectwise total area of SYO, TYO etc.	Total No of sites w.r.t. col. 12	Area of maintenance of plantation at each site	Plantation model being used (no. of plants per ha.)	Rate/ ha (Rs)	Amount (Rs. Lakhs)	Details of Area under treatment						
														Range	Round	Beat	Compartment no.	Latlong	Whether forest land or non - forest land	Whether tribal /remote area or non-tribal area
1	2	3	4	5	6	7	8	9	10	11	12	13	14	15	16	17	18	19	20	21
4	Thane	Alibag	Diversion of 30.399 ha. Forest land in favour of MMRDA Badra (East) Mumbai for laying undrground water pipeline under 403 MLD Surya Regional water supply scheme in mumbai district in the Maharashtra	12606 (64)	Reginal Office Nagpur FC-II/MH-83/2018 NGP/4411dt. 05.10.2019	30.3990	SYO	1.000	1	31.000	2500 (Model-1) (New)	54133	**17.96**	Pen	Dhamni	Aghai	Aghai S.No. 23/11	18.43.237 73.14.243	Forest Land	Non Tribal
			Total for Alibag Divison			**32.17**		**2.000**	**2**	**32.776**			**18.63**							
5	Thane	Dahanu	M/S Gujrat Gas Limited, Ahmedabad for laying of 10" diameter Steel Pipeline in Dahanu Taluka & Surrounding area in Palghar Taluka	12591 (62)	APCCF of State Govt.FLD-12A18/CR-148/F-10dt. 20.03.2019	0.0351	SYO	1.000	1	1.000	2500 (Model-1) (Old)	52920	**0.57**	Kasa	Mahalaxmi	Kasa	239	N19 54.530/ E72 55.675	Forest Land	Tribal
			Total for Dahanu Divison			0.0351		**1.000**	**1**	**1.000**			**0.57**							
6	Thane	Roha	Proposal of change in alinment over an area of 1.0373 ha.of forest land for widening of exsting 2 lane to 4/6 lane divided carriage way configuration from K.M.0.00 To K.M.84.00 (panvel Indapur section) on National Highway 17 in Raigad District in the state of Maharashtra regarding	12157	GOIFC-I/MH-11/2015-NGP/312dt. 1/12/2018	1.037	SYO	2.075	1	2.075	2500 (Model-1) (New)	54133	**1.20**	Roha	khamb	Dhamansai	Nadvali C.N.243	N 18 27 273 E 73 11 209	Forest Land	Non Tribal

Sr. No.	Circle	Division	Name of the Project	Project ID	Final sanction	Area of the Project (ha)	Year of Operation (i.e. SYO, TYO etc.)	Projectwise total area of SYO, TYO etc.	Total No of sites w.r.t. col. 12	Area of maintenance of plantation at each site	Plantation model being used (no. of plants per ha.)	Rate/ ha (Rs)	Amount (Rs. Lakhs)	Details of Area under treatment						
														Range	Round	Beat	Compartment no.	Latlong	Whether forest land or non - forest land	Whether tribal /remote area or non-tribal area
1	2	3	4	5	6	7	8	9	10	11	12	13	14	15	16	17	18	19	20	21
7	Thane	Roha	Diversion of 1.2899 ha.Restored Forest Land under section 22-a of Maharashtra private Forest (Acquisition)Act 1975 in favour of M/S Salim Khan & others For regularization of constucted bungalows,Servnt quarters,Poultry,Garage Swimming Pool with Lacuszzi ,road $ laying of under ground water pipe line $ electricity cable along the road and other allied		1.Govt. of India letter 2.State Govt. letter1.No.F.NO.FC-1/MH-34/2016-NGP/1521, Dt.27/3/17 2.FLD-1316/CR-66F-10dt. 27-3-17 dt. 03-4-17	1.290	SYO	1.290	1	1.290	625 (Model-5) (Old)	58048	**0.80**	Mahad	Poladpur	Karanje	Sadawali C.N.536 Part	N 17 18 648 E 73 26 383 N 17 58 677 E 73 26 403 N 17 58 556 E 73 26 433 N 17 08 582 E 73 26 465	Forest Land	Non Tribal
8	Thane	Roha	Diversion of 39.477 ha.forst land for laying of Gas Ahmadabad in favour of M/S transportation infrastructure co.ltd. In Latur, Usmanabad, Solapur, Pune , Raigad and Thane Distric		Regional APCCF of GOI6MSCO66/2006/BHO/3452dt. 7/9/2007	39.477	SYO	11.000	1	11.000	625 (Model-5) (Old)	58048	**6.83**	Mahad	Dasgaon	Tol BK.	Gut no 342 S.N.71/1	N 18 06 022 E 073 19 009 N 18 06 055 E 073 19 203 N 18 05 83	Forest Land	Non Tribal
							SYO	8.070	1	8.070	1111 (Model-4) (New)	32926	**2.84**	Murud	Murud	Vihoor	More C.N.676	N-18.21.30 E-72.55.42	Forest Land	Non Tribal
			Total for Roha divison					**22.435**	**4**	**22.435**			**11.68**							
			Total SYO			**33.17**		**27.435**	**9**	**58.211**			**31.96**							

Sr. No.	Circle	Division	Name of the Project	Project ID	Final sanction	Area of the Project (ha)	Year of Operation (i.e. SYO, TYO etc.)	Projectwise total area of SYO, TYO etc.	Total No of sites w.r.t. col. 12	Area of maintenance of plantation at each site	Plantation model being used (no. of plants per ha.)	Rate/ ha (Rs)	Amount (Rs. Lakhs)	Details of Area under treatment						
														Range	Round	Beat	Compartment no.	Latlong	Whether forest land or non - forest land	Whether tribal /remote area or non-tribal area
1	2	3	4	5	6	7	8	9	10	11	12	13	14	15	16	17	18	19	20	21
9	Thane	Thane	Diversion of 0.5525 ha. of Mangroves Forest land in favour of National Highway Authority of India, PIU-Surat (Expressway) Surat for construction of four lane bridge across Ulhas creek along NH-8 near Thane – Ghodbunder Junction in Tal & Dist. Palghar & Thane in the State of Maharashtra. (On Forest Land),	12503	MoEFFC-I/MH-79/2017-NGP/ 219dt. 04.08.2017	0.55	TYO	1.000	1	1.000	2500 (Model -1) (Old)	33440	**0.36**	Tokawada South	Sonawala	Dhasai	Survey No. 6	N19 15.987 E73 37.298	Protected Forest	Non Tribal
			Total for Thane Division			**0.5525**		**1.000**	**1**	**1.000**			**0.36**							
10	Thane	Alibag	Diversion of 0.7284 ha. Mangrove area for Upgradation/Modernisation/Expansion of Existing Shipyard at Village Kurul, Tal. Alibag Dist. Raigad Konkan Barge Builders Pvt. Ltd.	12390	Reginol Office Nagpur FC-1/MH-40/2016-NGP/3604dt. 5/5/2018	0.728	TYO	1.000	1	1.000	1111 (Model-3) (Old)	24275	**0.26**	Alibag	Ramraj	Ramraj	C.No. 203	N183102 E730027	Forest Land	Non Tribal
11	Thane	Alibag	Diversion of 2.5720 Ha. For construction of Matheran Ropway Pvt. Ltd.	11100	Reginol Office Nagpur F.No. 8B/20/2003-FCW/3788dt. 6/7/2018	2.572	TYO	2.980	1	2.980	2500 (Model -1) (Old)	33440	**1.07**	Matheran	Matheran	Matheran	Mangaon S.No.18/4,5,6 & 18/7 Pt	N1900112 7331227	Non Forest Land	Non Tribal

Sr. No.	Circle	Division	Name of the Project	Project ID	Final sanction	Area of the Project (ha)	Year of Operation (i.e. SYO, TYO etc.)	Projectwise total area of SYO, TYO etc.	Total No of sites w.r.t. col. 12	Area of maintenance of plantation at each site	Plantation model being used (no. of plants per ha.)	Rate/ ha (Rs)	Amount (Rs. Lakhs)	Details of Area under treatment						
														Range	Round	Beat	Compartment no.	Latlong	Whether forest land or non - forest land	Whether tribal /remote area or non-tribal area
1	2	3	4	5	6	7	8	9	10	11	12	13	14	15	16	17	18	19	20	21
12	Thane	Alibag	Diversion of 0.40 ha. Restored private forest land for regularisatio of contruction of out house, bungalow at village Belavali, dist Raigad Areaa 0.40 ha.	12331	Reginol Office Nagpur FC-1/MH-36/2016-NGP/2600dt. 2/9/2018	0.400	TYO	1.000	1	1.000	2500 (Model -1) (Old)	33440	**0.36**	Sudhagad	Ghotavade	Ghotavade	Mangaon Bk C.No. 597 l Wave Tarfe Asare S.No.51.54	N 183914.1 E 731749.2	Forest Land	Non Tribal
						0.400	TYO	0.400	1	0.400	2500 (Model -1) (Old)	33440	**0.14**					N 184112.2 E 732011.1		Non Tribal
			Total for Alibag Divison						**4**	**5.380**			**1.83**							
			Total TYO			**0.5525**			**5**	**6.380**			**2.18**							
13	Thane	Thane	Diversion of 0.1487 ha for construction of approach road to proposed School Building in private S.No. 117/1&2 and existing School Building in S.No.138/1 of village Kausa.	12293	MoEF6-MHB/ 71/2014-BHO/ 2035dt. 11/20/2014	0.15	4th Y.O.	2.000	1	2.000	625 (Model-5) (Old)	17845	**0.38**	Thane	Kalva	Rabale	256/B	N191548 19 E 73010627	Forest Land	Non Tribal
14	Thane	Thane	Diversion of 0.0168Ha.forest land construction of approach road	12029	MoEF6-MHB/ 31/2010 -BHO /430dt. 12/18/2015	0.02	4th Y.O.	1.000	1	1.000	2500 (Model-1) (Old)	18696	**0.20**	Tokavada S	Moroshi	Divanpada	725	N19 19.055 E73 40.711	Forest Land	Tribal
			Total for Thane Division			**0.166**		**3.000**	**2**	**3.000**			**0.58**	0.00	0.00	0.00	725.00			
15	Thane	Alibag	Diversion of 250.0635 ha. of forest land in faour of CIDCo ltd. for establishment of Navi Mumbai International Airport	12060	MoEF8-95/2012-FCdt. 4/24/2017	250.000	4th Y.O.	21.160	1	21.160	625 (Model-5) (Old)	17845	**4.04**	Alibag	Nagaon	Choul	Varende Gut No. 155	N183450 E725634	Non Forest Land	Non Tribal
16	Thane	Alibag	Diversion of 0.9850 ha. of reserved forest land for widening & improvement of Neral Dasturi road in Raigad district .	12479	State Govt.FLD-1317/CR-97/F-10 dt. 9/26/2017	0.987	4th Y.O.	1.000	1	1.000	625 (Model-5) (Old)	17845	**0.19**	Alibag	Kavir	Kavir	Village Kavir PF Gut No. 143	N183805 E725623	Forest Land	Non Tribal

Sr. No.	Circle	Division	Name of the Project	Project ID	Final sanction	Area of the Project (ha)	Year of Operation (i.e. SYO, TYO etc.)	Projectwise total area of SYO, TYO etc.	Total No of sites w.r.t. col. 12	Area of maintenance of plantation at each site	Plantation model being used (no. of plants per ha.)	Rate/ ha (Rs)	Amount (Rs. Lakhs)	Details of Area under treatment						
														Range	Round	Beat	Compartment no.	Latlong	Whether forest land or non - forest land	Whether tribal /remote area or non-tribal area
1	2	3	4	5	6	7	8	9	10	11	12	13	14	15	16	17	18	19	20	21
17	Thane	Alibag	Diversion of 0.440 ha. of Protected Forst land in favour of M/s Running Acrs Estate Private Limited for construction of approach Road, undergaound electricity Cable, water pipeline drainage line and control wall for soil erosion in Village Shedung in Raigad District	12200	Reginal APCCF of G.O.I. FC-I/MH-36/2016-NGP/2600dt. 9/25/2017	0.440	4th Y.O.	1.000	1	1.000	2500 (Model-1) (Old)	17845	**0.19**	Sudhagad	Ghotavade	Save South	Village Mangona Kh. S.No. 43 (Gut. No. 80)	N 184113.8 E 732010.8	Forest Land	Non Tribal
18	Thane	Alibag	Diversion of 0.1186 ha. of Reserved Forest land (MPFA, 1975 & U/s 4 IFA 1927) and unclassed Forest land in favour of M/s JSW Steel Ltd., Geetapuram, Dolvi for laying of underground 1100 mm water pipeline for industrical use and 400 mm dia water pipelien for drinking purpose to nearby villages for patansal to karav in raigad Distirct.	12454	Reginal APCCF of G.O.I. FC-I/MH-36/2016-NGP/2609dt. 9/25/2017	0.119	4th Y.O.	1.000	1	1.000	625 (Model-5) (Old)	17845	**0.19**	Nagothane	Kansai	Sukeli	Village Sukeli RF Compt. 384	N-18" 28'82.4 E-073" 11'12.9	Forest Land	Non Tribal
	Thane	Alibag					4th Y.O.	1.000	1	1.000	625 (Model-5) (Old)	17845	**0.19**	Nagothane	Nagothane	Vasgaon	Village Vasgaon RF compt No. 406	N1834028 E07310296	Forest Land	Non Tribal

Sr. No.	Circle	Division	Name of the Project	Project ID	Final sanction	Area of the Project (ha)	Year of Operation (i.e. SYO, TYO etc.)	Projectwise total area of SYO, TYO etc.	Total No of sites w.r.t. col. 12	Area of maintenance of plantation at each site	Plantation model being used (no. of plants per ha.)	Rate/ ha (Rs)	Amount (Rs. Lakhs)	Details of Area under treatment						
														Range	Round	Beat	Compartment no.	Latlong	Whether forest land or non - forest land	Whether tribal /remote area or non-tribal area
1	2	3	4	5	6	7	8	9	10	11	12	13	14	15	16	17	18	19	20	21
19	Thane	Alibag	Diversion of Reserved Forest 0.1772 Ha for laying of underground Electric cable and construction of control room at village Gharapuri, Tal. Uran, Dist. Raigad. **(Project Area Ha.0.1772) Project ID 12543**	12543	State Govt.FLD-1317/CR-438/F-10dt. 5/9/2018	0.177	4th Y.O.	1.500	1	1.500	2500 (Model-1) (Old)	17845	**0.29**	Sudhagad	Kalamb	Varad Jambulpada	Varad Jambulpada S.No. 106	N 18642.722 E 73301.92	Forest Land	Non Tribal
			Total for Alibag Divison			**251.72**			**6**	**26.660**			**5.09**							
20	Thane	Roha	Diversion of 1.2899 ha.Restored Forest Land under section 22-a of Maharashtra Private Forest (Acquisition)Act 1975 in favor of M/S Salim Khan & others For regularisation of constucted bungalows,Servant quarters, Poultry,GarageSwimming Pool with		1.Govt.of India letter 2.Stste govt.letter No.1.No.F.No.FC-1/MH-34/2016-NGP/1521,Dt.27/3/17 2.FLD-1316/CR-66F-10dt. 27.3.17 dt. 3.4.17	1.2899	4th Y.O.	1.290	1	1.290	1111 (Model-3) (Old)	17845	**0.01**	Mahad	Poladpur	Karanje	Village Kevnale Survey no 138/2	N 17 56 353 E 673 27 48 N 17 56 282 E 73 36 457 N 17 56 200 E 73 36 470 N 17 56 160 E 73 33 612	Forest Land	Non Tribal
			Total for Roha divison			**1.29**			**1**	**1.290**			**0.25**							
			Total 4th Y.O.			**253.18**			**9**	**30.950**			**5.92**							
21	Thane	Thane	Diversion of 0.6818 Ha. Of Reserved / Protected Forest land for laying natural gas pipeline Bhiwandi & Vasai Taluka & surrounding area.	12615	State Govt.FLD-12A-18/302/F-10dt. 1/2/2019	0.68	5th Y.O.	1.000	1	1.000	2500 (Model-1) (Old)	18696	**0.20**	Mandvi	Ganeshpuri	Bhiwali	S. No. 52	N 19 29.919 E 73 00.724	Forest Land	Tribal
			Total for Thane Division						**1**	**1.000**			**0.20**							

Sr. No.	Circle	Division	Name of the Project	Project ID	Final sanction	Area of the Project (ha)	Year of Operation (i.e. SYO, TYO etc.)	Projectwise total area of SYO, TYO etc.	Total No of sites w.r.t. col. 12	Area of maintenance of plantation at each site	Plantation model being used (no. of plants per ha.)	Rate/ ha (Rs)	Amount (Rs. Lakhs)	Details of Area under treatment						
														Range	Round	Beat	Compartment no.	Latlong	Whether forest land or non - forest land	Whether tribal /remote area or non-tribal area
1	2	3	4	5	6	7	8	9	10	11	12	13	14	15	16	17	18	19	20	21
22	Thane	Shahapur	Establishment of Navi Mumbai International Airport	12060	Diversion of 250.635 ha of forest land in faour of CIDCo LTD for Establishment of Navi Mumbai International		5th Y.O.	25.000	1	25.000	1111 (Model-3) (Old)	18696	**5.00**	Vihigaon	Mokhavane	Radyachapada	590	N 19 26 32.7 E 73 19 15.4	Forest Land	Tribal
	Thane	Shahapur				50	5th Y.O.	25.000	1	25.000	625 (Model-5) (Old)	18696	**5.00**	Washala	Pingalwadi	Dhakne	631	N 19 26 34.8 E 73 19 11.8	Forest Land	Tribal
23	Thane	Shahapur	Diversion Of fortest land For laying underground Optical Fiber Cable From bhiwandi To nashik (Along NH-3)	12418	State Goverment FLD-1216/CR322/F-10dt. 17-10-2016	0.623	5th Y.O.	1.000	1	1.000	2500 (Model-1) (Old)	18696	**0.20**	Shahapur	Atgaon	Asangaon	S.N. 94/A Gut.No.220	N 19 39 39.49 E 73 27 09.18	Forest Land	Tribal
24	Thane	Shahapur	Diversion Of 0.3563 Ha Forest Land For laying underground optical fibre cable along NH-3 From kasara(BK) to Ghatendevi via Jawhar Fata	12448	State Goverment FLD-1216/CR367/F-10dt. 26-10-2016	0.356	5th Y.O.	0.500	1	0.500	2500 (Model-1) (Old)	18696	**0.10**	Shahapur	Atgaon	Asangaon	S.N. 94/A Gut.No.220	N 19 36 04.77 E 73 33 06.37	Forest Land	Tribal
			Total for Shahapur Division					**51.500**	**4**	**51.500**			**10.30**							
25	Thane	Alibag	Diversion of 23.6865 ha. protected, reserved, acquired private forest and unclassed forest land for widening (four lanes) Panvel to Indapur section of NH-17 from Km 20/100 to 84/100 in favour of General Manager (Tech) and Project Director. NHAI in Raigad District of Maharashtra.	12157	Regiona APCCF of GOI6 MHC-026/2013-BHO/ 1352dt. 23/08/2013	23.687	5th Y.O.	26.000	1	26.000	1111 (Model-3) (Old)	17845	**4.96**	Alibag	Umta	Beloshi	PF S.No. 18	N183410 E725812	Forest Land	Non Tribal

Sr. No.	Circle	Division	Name of the Project	Project ID	Final sanction	Area of the Project (ha)	Year of Operation (i.e. SYO, TYO etc.)	Projectwise total area of SYO, TYO etc.	Total No of sites w.r.t. col. 12	Area of maintenance of plantation at each site	Plantation model being used (no. of plants per ha.)	Rate/ ha (Rs)	Amount (Rs. Lakhs)	Details of Area under treatment						
														Range	Round	Beat	Compartment no.	Latlong	Whether forest land or non - forest land	Whether tribal /remote area or non-tribal area
1	2	3	4	5	6	7	8	9	10	11	12	13	14	15	16	17	18	19	20	21
26	Thane	Alibag	Diversion of 9.0379 ha. protected, reserved, acquired private forest and unclassed forest land for widening (four lanes) Panvel to Indapur section of NH-17 from Km 0/00 to 20/100 in faour of General Manager (Tech) and Project Director. NHAI in Raigad District of Maharashtra.	12186	Regiona APCCF of GOI6 MHC-026/2013-BHO/ 1353dt. 23/08/2013	9.0379	5th Y.O.	21.000	1	21.000	1111 (Model-3) (Old)	17845	**4.01**	Alibag	Umta	Beloshi	PF S.No. 18	N183417 E725829	Forest Land	Non Tribal
27	Thane	Alibag	Diversion of 250.0635 ha. of forest land in faour of CIDCo ltd. for establishment of Navi Mumbai International Airport	12060	MoEF8-95/2012-FCdt. 4/24/2017	250.0635	5th Y.O.	32.000	1	32.000	625 (Model-5) (Old)	17845	**6.11**	Alibag	Nagaon	Choul	Varende Gut No. 155	N183503 E725626	Non Forest Land	Non Tribal
	Thane	Alibag					5th Y.O.	31.414	1	31.414	625 (Model-5) (Old)	17845	**6.00**	Alibag	Nagaon	Choul	Devghar S.No. 467	N183432 E725644	Non Forest Land	Non Tribal
	Thane	Alibag					5th Y.O.	24.000	1	24.000	625 (Model-5) (Old)	17845	**4.58**	Nagothane	Unhere	Unhere	Kumharshet S.No. 24/38	N1833027 E 07312292	Non Forest Land	Non Tribal
	Thane	Alibag					5th Y.O.	11.530	1	11.530	625 (Model-5) (Old)	17845	**2.20**	Sudhagad	Khandpoli	Chandargaon	Mahagaon Gut No. 327 (S.No. 7/1)	N 18382988	Non Forest Land	Non Tribal
	Thane	Alibag					5th Y.O.	10.000	1	10.000	625 (Model-5) (Old)	17845	**1.91**	Alibag	Ramraj	Ramraj	Malade S.No. 203	N183140 E730025	Forest Land	Non Tribal
	Thane	Alibag					5th Y.O.	10.000	1	10.000	625 (Model-5) (Old)	17845	**1.91**	Alibag	Ramraj	Ramraj	Bhonag S.No. 25 gut no. 36	N183218 E725918	Forest Land	Non Tribal
28	Thane	Alibag	Diversion of 0.45 ha. of forest land for construction of Linking of NH-4B to the road leading Vahal/Chirne in favour of NHAI	11372		0.45	5th Y.O.	1.000	1	1.000	1600 (Model-2) (Old)	17845	**0.19**	Sudhagad	Kalamb	Mulshi	Asare S.No. 2/2	N 18.622 E 73.298	Forest Land	Non Tribal
			Total for Alibag Divison					**166.944**	**9**	**166.944**			**31.88**							

Sr. No.	Circle	Division	Name of the Project	Project ID	Final sanction	Area of the Project (ha)	Year of Operation (i.e. SYO, TYO etc.)	Projectwise total area of SYO, TYO etc.	Total No of sites w.r.t. col. 12	Area of maintenance of plantation at each site	Plantation model being used (no. of plants per ha.)	Rate/ ha (Rs)	Amount (Rs. Lakhs)	Details of Area under treatment						
														Range	Round	Beat	Compartment no.	Latlong	Whether forest land or non - forest land	Whether tribal /remote area or non-tribal area
1	2	3	4	5	6	7	8	9	10	11	12	13	14	15	16	17	18	19	20	21
29	Thane	Dahanu	Dedicated Freight Corridor Project New Rail Line JNPT	12166	Moff8-92/2012 FCdt. 16.12.2015	58.15	5th Y.O.	7.000	1	7.000	1111 (Model-3) (Old)	18696	**1.40**	Manor	Manor	Pochade	S.No.43	N1942.357/ E7254.145	Forest Land	Tribal
30	Thane	Dahanu	Establishment of Navi Mumbai Internation Airport in Alibag Forest Division	12060	MoEFCCF-No.8-95/2012 FCdt. 24.04.2017	250.06	5th Y.O.	60.000	1	25.000	1111 (Model-3) (Old)	18696	**5.00**	Safale	Zanzroli	Zanzroli (West)	Kelva Gut No.1304	N19.629339/ E72.791266	Forest Land	Tribal
	Thane	Dahanu					5th Y.O.		1	20.000	1111 (Model-3) (Old)	18696	**0.00**	Udhawa	Osarvira	Osarvira	Karanjvira C.No.255	N20.011339/ E72.946639	Forest Land	Tribal
	Thane	Dahanu					5th Y.O.		1	15.000	1111 (Model-3) (Old)	18696	**0.00**	Udhawa	Ashte	Ashte	Ashte C.No.258	N20.032286/ E72.982046	Forest Land	Tribal
31	Thane	Dahanu	400 K.V. Kala Kudus Transmission Line (CA)	12374(54)	---	147.24	5th Y.O.	101.000	1	70.000	1111 (Model-3) (Old)	18696	**14.00**	Udhawa	Anvir	Anvir	417	N20 09 10.5/ E72.58 07.6	Forest Land	Tribal
	Thane	Dahanu					5th Y.O.		1	10.000	1111 (Model-3) (Old)	18696	**2.00**	Bordi	Uplat	Dongari	6	N20.167965/ E72.846962		Tribal
	Thane	Dahanu					5th Y.O.		1	10.000	1111 (Model-3) (Old)	18696	**2.00**	Bordi	Girgaon	Zari	8	N20.150015/ E72.857065		Tribal
	Thane	Dahanu					5th Y.O.		1	11.000	1111 (Model-3) (Old)	18696	**2.20**	Bordi	Girgaon	Girgaon	11	N20.114136/ E72.905813		Tribal
32	Thane	Dahanu	400 K.V. Kala Kudus Transmission Line (CA)				5th Y.O.	79.000	1	30.000	400 (Model-4) (Old)	18696	**6.00**	Saiwan	Gadchinchala	Gadchinchala	11	N20 05.045/ E73 03.277	Forest Land	Tribal
	Thane	Dahanu					5th Y.O.		1	14.000	400 (Model-4)	18696	**2.80**	Saiwan	Kinhavali	Divashi	12	N20 04.693/ E73 05. 992		Tribal
	Thane	Dahanu					5th Y.O.		1	25.000	400 (Model-4)	18696	**5.00**	Saiwan	Gangoli	Gangoli	17	N20 01.214/ E73 05 310		Tribal
	Thane	Dahanu					5th Y.O.		1	10.000	400 (Model-4) (Old)	18696	**2.00**	Saiwan	Chalani	Chalani	20	N20 01.032/ E73 03 769		Tribal
33	Thane	Dahanu	400 K.V. Navasari Boisar Transmission Line	-		56.86	5th Y.O.	85.000	1	85.000	1111 (Model-3) (Old)	18696	**17.00**	Udhawa	Kurze	Kurze	415	N20 05 30.5/ E72.57 53.7	Forest Land	Tribal
			Total for Dahanu Divison					**332.000**	**13**	**332.000**			**59.41**							

Sr. No.	Circle	Division	Name of the Project	Project ID	Final sanction	Area of the Project (ha)	Year of Operation (i.e. SYO, TYO etc.)	Projectwise total area of SYO, TYO etc.	Total No of sites w.r.t. col. 12	Area of maintenance of plantation at each site	Plantation model being used (no. of plants per ha.)	Rate/ ha (Rs)	Amount (Rs. Lakhs)	Details of Area under treatment						
														Range	Round	Beat	Compartment no.	Latlong	Whether forest land or non - forest land	Whether tribal /remote area or non-tribal area
1	2	3	4	5	6	7	8	9	10	11	12	13	14	15	16	17	18	19	20	21
34	Thane	Jawhar	400 k.v. kala kudus Tranmision Line	12374	Regional APCCFFN. FC-3/MH-02/2015-NGP/4096dt. 8/16/2018	81.83	5th Y.O.	15.000	1	15.000	400 (Model-4) (Old)	18696	**3.00**	Sawa	Karhe	Karhe	42	N19.54775 E7.08.330	Forest Land	Tribal
	Thane	Jawhar					5th Y.O.	15.000	1	15.000	400 (Model-4) (Old)	18696	**3.00**	Khodala	Nashera	Nashera	71	N1949.071 E7.25.735	Forest Land	Tribal
	Thane	Jawhar					5th Y.O.	14.000	1	14.000	400 (Model-4) (Old)	18696	**2.80**	West wada	Mandva	Mandva	152	N1941.818 E7311.967	Forest Land	Tribal
	Thane	Jawhar					5th Y.O.	6.000	1	6.000	400 (Model-4) (Old)	18696	**1.20**	West wada	Mandva	Mandva	152	N1937.436 E7259.554	Forest Land	Tribal
			Total					**50.000**	**4**	**50.000**			**10.00**							
35	Thane	Jawhar	400 k.v. Navsari Boisar Tranrision Line	12345 (53)	FLD-1214/CR-165/F10dt. 9/7/2018	56.86	5th Y.O.	6.800	1	6.800	400 (Model-4) (Old)	18696	**1.36**	North Jawhar	Ayara	Ayara	71	N956.647 E7311.619	Forest Land	Tribal
			Total for Jawhar Divison			**56.86**		**56.800**	**5**	**56.800**			**11.36**							
			Total 5th Y.O.					**607.244**	**32**	**608.244**			**113.16**							
36	Thane	Thane	Diversion of 0.777 ha. protected forest land for construction Crematorium & Burial ground for all communities including Indian Christian & Muslim Communities at Nallasopara (East) In Thane Dist. Of Maharashtra	12099	-287dt. 9/11/2015	1.000	6th Y.O.	1.000	1	1.000	1111 (Model-3) (Old)	18696	**0.20**	Murbad East	Murbad	Murbad	S.No.257	N 19°16'32 E 73°24'22	Forest Land	Tribal

Sr. No.	Circle	Division	Name of the Project	Project ID	Final sanction	Area of the Project (ha)	Year of Operation (i.e. SYO, TYO etc.)	Projectwise total area of SYO, TYO etc.	Total No of sites w.r.t. col. 12	Area of maintenance of plantation at each site	Plantation model being used (no. of plants per ha.)	Rate/ ha (Rs)	Amount (Rs. Lakhs)	Details of Area under treatment						
														Range	Round	Beat	Compartment no.	Latlong	Whether forest land or non - forest land	Whether tribal /remote area or non-tribal area
1	2	3	4	5	6	7	8	9	10	11	12	13	14	15	16	17	18	19	20	21
37	Thane	Thane	Diversion of 0.783 ha. Protected forest land for construction of RCC ground service reserviour for drinking water and approach road at Village Gokhivare, Taluka Vasai, Dist. Thane Executive Engineer, Maharashtra Jeevan Pradhikaran Water Management Division, Virar (West)	11679	-FLD-1214dt. 6/15/2015	1.000	6th Y.O.	1.000	1	1.000	1111 (Model-3) (Old)	18696	**0.20**	Murbad East	Murbad	Murbad	S.No. 258	N 19°16'24 E 73°24'22	Forest Land	Tribal
38	Thane	Thane	Diversion of 1.487 ha. Forest land for laying Optical Fibre Cable along Kalyan-AlePhata N.H.222 route section Ch. No. 9/300 to Ch. No. 95/750 from Kalyan to Thitabi. TATA Teleservices (Maharashtra) Ltd. A1- Aqmar Building Building - 5, Ganeshkhind Road, Shivaji Nagar, Pune- 411 005	47	-2387dt. 1/29/2013	2.976	6th Y.O.	2.976	1	2.976	1111 (Model-3) (Old)	17845	**0.57**	Murbad East	Murbad	Murbad	S.No. 259	N 19°16'18 E 73°24'20	Forest Land	Non Tribal
			Total for Thane Division			**4.9760**		**4.976**	**3**	**4.976**			**0.97**							

Sr. No.	Circle	Division	Name of the Project	Project ID	Final sanction	Area of the Project (ha)	Year of Operation (i.e. SYO, TYO etc.)	Projectwise total area of SYO, TYO etc.	Total No of sites w.r.t. col. 12	Area of maintenance of plantation at each site	Plantation model being used (no. of plants per ha.)	Rate/ ha (Rs)	Amount (Rs. Lakhs)	Details of Area under treatment						
														Range	Round	Beat	Compartment no.	Latlong	Whether forest land or non - forest land	Whether tribal /remote area or non-tribal area
1	2	3	4	5	6	7	8	9	10	11	12	13	14	15	16	17	18	19	20	21
39	Thane	Alibag	Diversion of 14.00 Ha. Mangvrove vegetation of notified water area of JNPT for development of a standalone container handling facilities with a quay length of 330 mt. towards north of JNPT to create additional berth facility to handle increased container cargo JNPT Uran	12279	Regional APCCF of G.O.I.6-MHC075/ 2013-BHO/ 1775dt. 22/10/2014	14.00	6th Y.O.	28.000	1	28.000	2500 (Model-1) (Old)	17845	**5.35**	Khalapur	Khopoli	Lavej	Shengaon S.No. 84	N 1882911 E 7333222	Forest Land	Non Tribal
40	Thane	Alibag	Diversion of 9.4040 ha. Reserved, Protected, Private forest, Restored Private Forest, Mangrove forest, Identified forest and finally acquired forest for laying of 12" dia underground Uran Chakan & Shikrapur LPG pipeline along with 6" dia Optical Fibre Cable (OFC) in favour of Chief Manager, LPG Project, Hindustan Petroleum, Corportation Ltd., in Raigad District of Maharashtra	12343	Regional APCCF of G.O.I.6-MHC033/ 014-BHO/482dt. 19/11/2015	9.4040	6th Y.O.	18.808	1	18.808	2500 (Model-1) (Old)	17845	**3.59**	Sudhagad	Dhokshet	Hatond	Gondav Gut No. 396,398 & 399	N 1869710 E 7327503	Forest Land	Non Tribal

Sr. No.	Circle	Division	Name of the Project	Project ID	Final sanction	Area of the Project (ha)	Year of Operation (i.e. SYO, TYO etc.)	Projectwise total area of SYO, TYO etc.	Total No of sites w.r.t. col. 12	Area of maintenance of plantation at each site	Plantation model being used (no. of plants per ha.)	Rate/ ha (Rs)	Amount (Rs. Lakhs)	Details of Area under treatment						
														Range	Round	Beat	Compartment no.	Latlong	Whether forest land or non - forest land	Whether tribal /remote area or non-tribal area
1	2	3	4	5	6	7	8	9	10	11	12	13	14	15	16	17	18	19	20	21
41	Thane	Alibag	Diversion of 0.5376 ha. Projtected Forest and Mangorve land for laying of water supply pipeline from Kalamboli juntion to Kharghar, Navi Mumbai	12334	State Govt. FLD-1314/CR No.102/F-10 dt. 07/03/2015	1.1325	6th Y.O.	1.000	1	1.000	2500 (Model-1) (Old)	17845	**0.19**	Sudhagad	Ghotavade	Fhalyan	Mangaon Bk. S.No. 20,21	N 18305.1 E 731005.9	Non Forest Land	Non Tribal
42	Thane	Alibag	Diversion of 0.0075 ha. unclassed forest land for construction of leading lights by erecting towers/poles on a foundation at Elephanta Island at Gharapuri in Raigad District.	12342	State Govt. FLD-1314/CR No.161/F-10 dt. 6/6/2015	0.0075	6th Y.O.	1.000	1	1.000	2500 (Model-1) (Old)	17845	**0.19**	Sudhagad	Ghotavade	Fhalyan	Mangaon Bk. S.No. 20,21	N 184107.7 E 732012.7	Non Forest Land	Non Tribal
43	Thane	Alibag	Diversion of 19.50 ha. Mangrove area for construction of road and railwy access for the project Development of Fourth Container Terminal and Marine Chemical Terminal at Jawaharlal Nehru Port Trust, in Raigad Distirct of Maharashtra.	12359	Regional Office Nagpur, APCCF of G.O.I.F.No.: FC-II/MH-06/2015-NGP/575dt. 23/06/2016	19.50	6th Y.O.	39.000	1	39.000	2500 (Model-1) (Old)	17845	**7.45**	Uran	Uran	Kalambsure	Kalambsure P.F. S.No. 167	N1885699 E7302904	Forest Land	Non Tribal
			Total for Alibag Divison			**44.044**		**87.808**	**5**	**87.808**			**16.77**							
44	Thane	Roha	Bhima Shankar Ghat Road Form Kothimbe	1148 (37)	G.O.I.MHC-07/2007 BHO 1572dt. 26/9/2013	10.6824	6th Y.O.	10.682	1	10.682	400+ 1100	17845	**2.04**	Roha	Roha	Tammansh et	Village KARIVANE s.no. 15/1	N 18 23 087 E 73 11 209	Forest Land	Non Tribal
			Total for Roha Divison			**10.68**		**10.682**	**1**	**10.682**			**2.04**							

Sr. No.	Circle	Division	Name of the Project	Project ID	Final sanction	Area of the Project (ha)	Year of Operation (i.e. SYO, TYO etc.)	Projectwise total area of SYO, TYO etc.	Total No of sites w.r.t. col. 12	Area of maintenance of plantation at each site	Plantation model being used (no. of plants per ha.)	Rate/ ha (Rs)	Amount (Rs. Lakhs)	Details of Area under treatment						
														Range	Round	Beat	Compartment no.	Latlong	Whether forest land or non - forest land	Whether tribal /remote area or non-tribal area
1	2	3	4	5	6	7	8	9	10	11	12	13	14	15	16	17	18	19	20	21
45	Thane	Dahanu	Dedicated Freight Corridor Project New Rail Line JNPT	12166	Moff8-92/2012 FCdt. 16.12.2015	58.15	6th Y.O.	110.000	1	15.000	1111 (Model-3) (Old)	18696	**3.00**	Palghar	Padgha	Morekuran	C.No.32	N19 44 22.91/ E72 46 33.96	Forest Land	Tribal
	Thane	Dahanu					6th Y.O.		1	9.000		18696	**1.80**	Palghar	Padgha	Morekuran	C.No.24	N19 44 09.52/ E72 46 19.47		Tribal
	Thane	Dahanu					6th Y.O.		1	13.000		18696	**2.60**	Palghar	Chahade	Chahade	C.No.133	N19 68 51.74/ E72 84 08.21		Tribal
	Thane	Dahanu					6th Y.O.		1	7.000		18696	**1.40**	Palghar	Chahade	Girnoli	C.No.115	N19 74 84.25/ E72 83 98.48		Tribal
	Thane	Dahanu					6th Y.O.		1	25.000		18696	**5.00**	Udhawa	Udhawa	Osarvira	C.No.255	N20.014085/ E72.949166		Tribal
	Thane	Dahanu					6th Y.O.		1	10.000		18696	**2.00**	Udhawa	Modgaon	Haladpada	C.No.263	N20.066175/ E72.936905		Tribal
	Thane	Dahanu					6th Y.O.		1	10.000		18696	**2.00**	Bordi	Uplat	Dongari	C.No.4	N20.083851/ E72.853948		Tribal
	Thane	Dahanu					6th Y.O.		1	13.000		18696	**2.60**	Palghar	Padgha	Morekuran	S.No.59/1A	N19 42 53.27/ E72 44 21.00		Tribal
	Thane	Dahanu					6th Y.O.		1	8.000		18696	**1.60**	Palghar	Padgha	Morekuran	S.No.59/1A	N19 43 00.17/ E72 44 30.59		Tribal
			Total for Dahanu Divison			**58.15**		**110.000**	**9**	**110.000**			**22.01**							
46	Thane	Jawhar	Diversion of 0.7662 ha. Of Restored forest land for construction of Industrial building, recreation grounds, common facility centre, internal road etc. om favour of Shri. Ashok Mourya & Suriner Singh sethi in Thane District of Maharashtra	11468	-F.No.6- MHB-141/2007-BHO/512dt. 12.10.2015	1.5324	6th Y.O.	1.532	1	1.532	1111 (Model-3) (Old)	18696	**0.31**	Mandvi	Banganga	Nimbavali	S.No.55 C.No.990	N1931422 E7300543	Forest Land	Tribal
			Total for Jawhar Divison			**1.5324**		**1.532**	**1**	**1.532**			**0.31**							
			Total 6th Y.O.			**119.385**		**214.998**	**19**	**214.998**			**42.09**							

Sr. No.	Circle	Division	Name of the Project	Project ID	Final sanction	Area of the Project (ha)	Year of Operation (i.e. SYO, TYO etc.)	Projectwise total area of SYO, TYO etc.	Total No of sites w.r.t. col. 12	Area of maintenance of plantation at each site	Plantation model being used (no. of plants per ha.)	Rate/ ha (Rs)	Amount (Rs. Lakhs)	Details of Area under treatment						
														Range	Round	Beat	Compartment no.	Latlong	Whether forest land or non - forest land	Whether tribal /remote area or non-tribal area
1	2	3	4	5	6	7	8	9	10	11	12	13	14	15	16	17	18	19	20	21
47	Thane	Thane	Diversion of 117.2875 ha of forest land for construction of 220 KV M/C lines on MC narrow base towers for renovation of the existing 220 KV D/C Borivali-Boisar and Kharghar-Kalwa transmission line using the same corridor area	11971	MoEFF. No. 8-82/ 2011-FC dt. 17.09.2012	36.585	7th Y.O.	25.000	1	25.000	625 (Model-5) (Old)	18696	**5.00**	Tokawada (North)	Talegaon	Talegaon	701 C.No.8	N-19.431302 E-73.673135	Forest Land	Tribal
	Thane	Thane					7th Y.O.	25.000	1	25.000	1111 (Model-3) (Old)	18696	**5.00**	Bhiwandi	Joo	Lakhiwali Village-Alkhiwali	1040	N 19 21 54" E 73 2 6.55"	Forest Land	Tribal
	Thane	Thane					7th Y.O.	23.170	1	23.170	1111 (Model-3) (Old)	18696	**4.64**	Padgha	Dighashi	Sagaon Village-Devchole	1016	N 19 30 30 2 N 19 30 18 0 N 19 30 29 2 N 19 30 15 2	Forest Land	Tribal
			Total for Thane Division			**36.59**		**73.170**	**3**	**73.170**			**14.64**							
48	Thane	Shahapur	Approach road Village Shendrun Shri M.L.Chavan	12121	MoEF6-MHB 58/2013/ BHO/1678 & 6-MHB 58/2013/ BHO/0063 dt. 15.10.2013 & dt. 21.01.2014	0.154	7th Y.O.	1.000	1	1.000	1111 (Model-3) (Old)	17845	**0.19**	Dhasai	Nadgaon	Lenad Kh	866	N-19°23'561" E-73°22'415"	Forest Land	Non Tribal
			Total for Shahapur Division			**0.154**		**1.000**	**1**	**1.000**			**0.19**							
49	Thane	Alibag	Diversion of 0.9866 Ha. of Reserved Forest Land for Construction of Community Hall, Herbal Clince & Medicinal Plantation at Village-Khopoli Taluka Khalapur in District Raigad Maharashtra, Swami Gagangiri Maharaj Ashram.	12156	Regiona APCCF of GOI6-MHB-15/2013-BHO/1526dt. 2/9/2014	1.9732	7th Y.O.	1.973	1	1.973	2500 (Model-1) (Old)	17845	**0.38**	Sudhagad	Dhokshet	Dahigaon	662	N 18494667 E 73298463	Forest Land	Non Tribal
			Total for Alibag Divison			**1.9732**		**1.973**	**1**	**1.973**			**0.38**							

Sr. No.	Circle	Division	Name of the Project	Project ID	Final sanction	Area of the Project (ha)	Year of Operation (i.e. SYO, TYO etc.)	Projectwise total area of SYO, TYO etc.	Total No of sites w.r.t. col. 12	Area of maintenance of plantation at each site	Plantation model being used (no. of plants per ha.)	Rate/ ha (Rs)	Amount (Rs. Lakhs)	Details of Area under treatment						
														Range	Round	Beat	Compartment no.	Latlong	Whether forest land or non - forest land	Whether tribal /remote area or non-tribal area
1	2	3	4	5	6	7	8	9	10	11	12	13	14	15	16	17	18	19	20	21
50	Thane	Roha	M/S Pioneer Gas Power Ltd Village Varachivadi (Vile)	12224	MOEF6MHB/21/2014/BHO/1027/Date 15/5/14dt. 15/5/14	0.2863	7th Y.O.	1.000	1	1.000	2500 (Model-1) (Old)	17845	**0.19**	Mangaon	Patnus	Patnus	Comp.No.326 Vaillage Bhagad	N 18 40 41 E 73 34 22 N 18 40 26 E 73 34 44	Forest Land	Non Tribal
51	Thane	Roha	Hawai Pravashi Rajiv Ghera Singhad s no.321		Final aproal6/MHB-057/2011/BHO dt. 2/26/2013	0.9279	7th Y.O.	1.040	1	1.040	2500 (Model-1) (Old)	17845	**0.20**	Mahad	Poladpur	Kotwal	824 gut No Kotwal	N 17 52 58.37 E 73 30 48.02	Forest Land	Non Tribal
			Total for Roha Divison			**1.214**		**2.040**	**2**	**2.040**			**0.39**							
52	Thane	Dahanu	Apti Budruk to MIDC Tarapur Natural Gas Pipe Line	12154	Regional APCCF of GOINo.MHC.04/2013-BHO/2133dt. 27.12.2013	8.412	7th Y.O.	17.000	1	17.000	1111 (Model-3) (Old)	18696	**3.40**	Manor	Nandgaon	Pole	C.No.176	N1975.218/ E7292.405	Forest Land	Tribal
			Total for Dahanu Divison			**8.412**		**17.000**	**1**	**17.000**			**3.40**							
			Total 7th Y.O.			**48.338**		**95.183**	**8**	**95.183**			**19.00**							
53	Thane	Thane	Construction of Traning/widening/ Deepening of usha nagar nalla	12120	0245dt. 06.02.2013	0.939	8th Y.O.	1.870	1	1.870	2500 (Model-1) (Old)	17845	**0.36**	Kalyan	Khadawali	Khadawali	C.No.827	N19.231749 E073.285303	Forest Land	Non Tribal
54	Thane	Thane	Construction of Traning/widening/ Deepening of Cromplon Kanjan nalla	12126	0246dt. 06.02.2013	0.840	8th Y.O.	2.000	1	2.000	2500 (Model-1) (Old)	17845	**0.38**	Kalyan	Khadawali	Khadawali	C.No.828	N 19°20'45" E73°12'37"	Forest Land	Non Tribal
55	Thane	Thane	Construction of 5th & 6th Lines Between thane & Diva Station of Central Railway MUTP-II	12019	0340dt. 26.02.2013	3.231	8th Y.O.	6.462	1	6.462	2500 (Model-1) (Old)	17845	**1.23**	Thane	Kalwa	Shil	S.No. 64,72part	N 19 7 54.96 E 73 2 58.28 N 19 8 29.98 E 73 2 23.58 N 19 8 31.85 E 73 2 30.09	Forest Land	Non Tribal
56	Thane	Thane	Under Ground Pipeline with service road at villages Mohili, Balyani, Ganegaon, Unbrani, Vadavali	12009	00dt. 02.08.2013	0.9635	8th Y.O.	2.000	1	2.000	2500 (Model-1) (Old)	17845	**0.38**	Kalyan	Khadawali	Khadawali	C.No. 827	N 19°20'8" E73°13'13"	Forest Land	Non Tribal
			Total for Thane Division			**5.973**		**12.332**	**4**	**12.332**			**2.35**							

Sr. No.	Circle	Division	Name of the Project	Project ID	Final sanction	Area of the Project (ha)	Year of Operation (i.e. SYO, TYO etc.)	Projectwise total area of SYO, TYO etc.	Total No of sites w.r.t. col. 12	Area of maintenance of plantation at each site	Plantation model being used (no. of plants per ha.)	Rate/ ha (Rs)	Amount (Rs. Lakhs)	Details of Area under treatment						
														Range	Round	Beat	Compartment no.	Latlong	Whether forest land or non - forest land	Whether tribal /remote area or non-tribal area
1	2	3	4	5	6	7	8	9	10	11	12	13	14	15	16	17	18	19	20	21
57	Thane	Alibag	Diversion of 23.6865 ha. protected, reserved, acquired private forest and unclassed forest land for widening (four lanes) Panvel to Indapur section of NH-17 from Km 20/100 to 84/100 in favour of General Manager (Tech) and Project Director. NHAI in Raigad	12157	Regional APCCF of GOI6 MHC-026/2013-BHO/ 1352 dt. 23/08/2013	23.687	8th Y.O.	25.000	1	25.000	2500 (Model-1) (Old)	17845	**4.77**	Sudhagad	Potalaj	Potlaj Kh.	Com. No. 634	N 18494667 E 73298463	Forest Land	Non Tribal
			Total for Alibag Divison			**23.687**			**1**	**25.000**			**4.77**							
			Total 8th Y.O.					**12.332**	**5**	**37.332**			**7.13**							
58	Thane	Shahapur	Construction of approach road in favour of shri.S.H.Koparkar	11281	MoEF6-MHB 027/2008/BHO/ 797 dt. 10.05.2012	0.175	9th Y.O.	1.125	1	1.125	400 (Model-4) (Old)	17845	**0.21**	Shahapur	Ambekhor	Ambekhor	S.NO.84	19°25'51.58" 73°33'31.56"	Forest Land	Non Tribal
			Total for Shahapur Division			**0.175**		**1.125**	**1**	**1.125**			**0.21**							
59	Thane	Alibag	Diversion of 3.564 ha. for contruction of 10" LPG undrer ground Pipeline BPCL from Mahul refinary to Uran LPG Plant	12127	Regional APCCF of GOINo.6-MHB105/ 2012-BHO/1872 dt. dt. 26/11/2012	3.564	9th Y.O.	7.128	1	7.128	400 (Model-400+1100)	6864	**0.52**	Alibag	Karla	Karla	S.No. 18/1	N184234 E725449	Forest Land	Non Tribal
			Total for Alibag Divison			**3.56**		**7.128**	**1**	**7.128**			**0.52**							
			Total 9th Y.O.			**3.74**		**8.253**	**2**	**8.253**			**0.74**							
			Grand total of Thane circle						**89**	**1059.551**			**222.17**							

Sr. No.	Circle	Division	Name of the Project	Project ID	Final sanction	Area of the Project (ha)	Year of Operation (i.e. SYO, TYO etc.)	Projectwise total area of SYO, TYO etc.	Total No of sites w.r.t. col. 12	Area of maintenance of plantation at each site	Plantation model being used (no. of plants per ha.)	Rate/ ha (Rs)	Amount (Rs. Lakhs)	Details of Area under treatment						
														Range	Round	Beat	Compartment no.	Latlong	Whether forest land or non - forest land	Whether tribal /remote area or non-tribal area
1	2	3	4	5	6	7	8	9	10	11	12	13	14	15	16	17	18	19	20	21
1	Yavatmal	Pusad	Reliance -OFC - Cable Pusad Bjojla - Chikhli-Parwa Lakhi	-	State Govt.G.R. FLD/3617/Case no./332 F-10 Ministry Mumbaidt. 9/11/2017	1.00	SYO	1.000	1	1.000	1111 (Model-4) (New)	35697	**0.38**	Marwadi	Marwadi	Marwadi	385	N-19.58.56 E-77.21.59	Forest Land	Non Tribal
			Total SYO			**1.00**		**1.000**	**1**	**1.000**			**0.38**							
2	Yavatmal	Yavatmal	Lowar painganga	11074	MoEFF.No.8 129/20 02-FCDt29/01/2014	13.46	TYO	13.460	1	13.460	1111 (Model - 5) (New)	44751	**6.45**	Darwha	Pathrod	Uchagaon	166	N 20°12'9" E 77°50'34"	Forest Land	Non Tribal
3	Yavatmal	Pusad		11074	MoEFF.No. 8-129/2002-FCDt.29/01/2014	20.00	TYO	20.000	1	20.000	1111 (Model-4) (New)	25180	**5.39**	Mahagaon	Mahagaon	Mahagaon	762	N-19.38.64 E-77.42.12	Non Forest Land	Non Tribal
4	Yavatmal	Pusad		11074	MoEFF.No. 8-129/2002-FCDt.29/01/2014	20.00	TYO	20.000	1	20.000	1111 (Model-4) (New)	25180	**5.39**	Mahagaon	Mahagaon	Mahagaon	438	N-19.43.23 E-77.45.59		Non Tribal
5	Yavatmal	Pusad		11074	MoEFF.No. 8-129/2002-FCDt.29/01/2014	20.00	TYO	20.000	1	20.000	1111 (Model-4) (New)	25180	**5.39**	Mahagaon	Mahagaon	Mahagaon	446	N-19.57.30 E-77.23.22		Non Tribal
6	Yavatmal	Pusad		11074	MoEFF.No. 8-129/2002-FCDt.29/01/2014	30.00	TYO	30.000	1	30.000	1111 (Model-4) (New)	25180	**8.08**	Mahagaon	Mahagaon	Mahagaon	479	N-19.38.64 E-77.42.12		Non Tribal
7	Yavatmal	Pusad		11074	MoEFF.No. 8-129/2002-FCDt.29/01/2014	30.00	TYO	30.000	1	30.000	1111 (Model-4) (New)	25180	**8.08**	Mahagaon	Mahagaon	Mahagaon	451	N-19.43.28 E-77.46.60		Non Tribal
8	Yavatmal	Pusad		11074	MoEFF.No. 8-129/2002-FCDt.29/01/2014	20.00	TYO	20.000	1	20.000	1111 (Model-4) (New)	25180	**5.39**	Mahagaon	Mahagaon	Mahagaon	423	N-19.43.29 E-77.40.47		Non Tribal
9	Yavatmal	Pusad		11074	MoEFF.No. 8-129/2002-FCDt.29/01/2014	15.00	TYO	15.000	1	15.000	1111 (Model-4) (New)	25180	**4.04**	Digras	Singad	Singad	344	N-20.00.26 E-77.38.42		Non Tribal

Sr. No.	Circle	Division	Name of the Project	Project ID	Final sanction	Area of the Project (ha)	Year of Operation (i.e. SYO, TYO etc.)	Projectwise total area of SYO, TYO etc.	Total No of sites w.r.t. col. 12	Area of maintenance of plantation at each site	Plantation model being used (no. of plants per ha.)	Rate/ ha (Rs)	Amount (Rs. Lakhs)	Details of Area under treatment						
														Range	Round	Beat	Compartment no.	Latlong	Whether forest land or non - forest land	Whether tribal /remote area or non-tribal area
1	2	3	4	5	6	7	8	9	10	11	12	13	14	15	16	17	18	19	20	21
10	Yavatmal	Pusad	Lower painganga	11074	MoEFF.No. 8-129/2002-FCDt.29/01/2014	12.00	TYO	12.000	1	12.000	1111 (Model-4) (New)	25180	**3.23**	Digras	Singad	Sakhari	338	N-20.04.74 E-77.66.14	Non Forest Land	Non Tribal
11	Yavatmal	Pusad		11074	MoEFF.No. 8-129/2002-FCDt.29/01/2014	40.00	TYO	40.000	1	40.000	1111 (Model-4) (New)	25180	**10.78**	Digras	Digras	Sakhara	769	N-20.55.35 E-77.22.27		Non Tribal
12	Yavatmal	Pusad		11074	MoEFF.No. 8-129/2002-FCDt.29/01/2014	25.00	TYO	25.000	1	25.000	1111 (Model-4) (New)	25180	**6.74**	Digras	Dehani-E	Vithala-II	798	N-19.59.38 E-77.44.33		Non Tribal
13	Yavatmal	Pusad		11074	MoEFF.No. 8-129/2002-FCDt.29/01/2014	25.00	TYO	25.000	1	25.000	1111 (Model-4) (New)	25180	**6.74**	Digras	Dehani-E	Tuptakli	789	N-20.01.52 E-77.45.31		Non Tribal
14	Yavatmal	Pusad		11074	MoEFF.No. 8-129/2002-FCDt.29/01/2014	25.00	TYO	25.000	1	25.000	1111 (Model-4) (New)	25180	**6.74**	Digras	Dehani-W	Kandali	330	N.20.09.31 E-77.45.32		Non Tribal
15	Yavatmal	Pusad		11074	MoEFF.No. 8-129/2002-FCDt.29/01/2014	24.82	TYO	24.820	1	24.820	1111 (Model-4) (New)	25180	**6.69**	Digras	Dehani-W	Dehani-II	329	N-20.08.36 E-77.46.20		Non Tribal
16	Yavatmal	Pusad		11074	MoEFF.No. 8-129/2002-FCDt.29/01/2014	25.00	TYO	25.000	1	25.000	1111 (Model-4) (New)	25180	**6.74**	Kali (D.)	Kali (D.)	Kali (D.)	812	N-19.53.56 E-77.39.78		Non Tribal
17	Yavatmal	Pusad		11074	MoEFF.No. 8-129/2002-FCDt.29/01/2014	30.00	TYO	30.000	1	30.000	1111 (Model-4) (New)	25180	**8.08**	Kali (D.)	Kali (D.)	Kali (D.)	813	N-19.53.78 E-77.39.33		Non Tribal
18	Yavatmal	Pusad		11074	MoEFF.No. 8-129/2002-FCDt.29/01/2014	25.00	TYO	25.000	1	25.000	1111 (Model-4) (New)	25180	**6.74**	Pusad	Pusad	Pusad	826	N-19.93.78 E-77.63.17		Non Tribal
19	Yavatmal	Pusad	Kasola Project	161	MoEFF.No.8-97/98-FCDt.11/03/2002	17.73	TYO	17.730	1	17.730	1111 (Model-4) (New)	25180	**4.78**	Digras	Singad	Rui	807	N-20.02.49 E-77.39.76		Non Tribal

Sr. No.	Circle	Division	Name of the Project	Project ID	Final sanction	Area of the Project (ha)	Year of Operation (i.e. SYO, TYO etc.)	Projectwise total area of SYO, TYO etc.	Total No of sites w.r.t. col. 12	Area of maintenance of plantation at each site	Plantation model being used (no. of plants per ha.)	Rate/ ha (Rs)	Amount (Rs. Lakhs)	Details of Area under treatment						
														Range	Round	Beat	Compartment no.	Latlong	Whether forest land or non - forest land	Whether tribal /remote area or non-tribal area
1	2	3	4	5	6	7	8	9	10	11	12	13	14	15	16	17	18	19	20	21
20	Yavatmal	Washim	Shelgaon Minor Irrigation Project (Jambrun)	1209	MoEFF.No.FC-II/MH-28/2015-NGP/3988Dt.31/07/2018	6.65	TYO	6.650	1	6.650	1111 (Model - 5) (New)	44751	**3.18**	Washim	Washim	Shirpur	135	N20.04.0262 E-77.21.9367	Non Forest Land	Non Tribal
21	Yavatmal	Washim	Raperi Storage Tank	11984	MoEFF.No.6-MHC-081/2011-BHO/4197Dt.04/09/2018	8.75	TYO	3.500	1	3.500	1111 (Model - 5) (New)	44751	**1.68**	Karanja	Mangrulpir	Kasola	143	N20.6.26 E77.21.38	Non Forest Land	Non Tribal
			Total TYO			**433.41**		**428.160**	**20.00**	**428.160**			**120.30**							
22	Yavatmal	Washim	Ingalwadi Minor Irr. Project	-	MoEF6-MHC016/2012/BhoDt.06/01/2017	7.00	4th Y.O.	7.000	1	7.000	1111 (Model - 5) (New)	17845	**1.34**	karanja	mangarulepir	Kasola	143	N20.6.25 E-77.21.25	Non Forest Land	Non Tribal
23	Yavatmal	Washim	Parwa Kohar	11958	MoEF6-MHC-002/2011-BHO/2361Dt.05/09/2017	21.00	4th Y.O.	21.000	1	21.000	1111 (Model - 5) (New)	17845	**4.01**	Manora	Manora	Sawargaon	39 / 3	N20.14.883 E77.34.442	Non Forest Land	Non Tribal
24	Yavatmal	Washim	Jaipur Minor Irr. Project	11905	MoEF6-MHC-0032/2010-BHO/1919Dt.13/06/2017	24.42	4th Y.O.	24.420	1	24.420	1111 (Model - 5) (New)	17845	**4.66**	Washim	Washim	Shirpur	3	N19.90.3573 E77.25.8523	Non Forest Land	Non Tribal
25	Yavatmal	PKD	Ghonsa Open Cast	-	MOEF6MHC-30/2014/BHO-2372dt. 3/8/2016	24.00	4th Y.O.	48.000	1	33.000	1600 (Model-2) (New)	17845	**6.30**	Wani	Wani	Shirpur	807	19.93436 79.02775	Forest Land	Non Tribal
26	Yavatmal	PKD					4th Y.O.		1	10.000	1600 (Model-2) (New)	17845	**1.91**	Wani	Wani	Wani	C-54	20.08618 78.91509		Non Tribal
27	Yavatmal	PKD					4th Y.O.		1	5.000	1600 (Model-2) (New)	17845	**0.95**	Wani	Wani	Mandar	C-8	20.02341 78.97038		Non Tribal
28	Yavatmal	PKD	765/KV/DC/Hydrabad To Wardha Transmission Line	-	MOEFFC-II/MH-44/2016-NGP/2053dt. 7/7/2017	32.21	4th Y.O.	64.420	1	30.000	1600 (Model-2) (New)	17845	**5.73**	Maregaon	Maregaon	Maregaon	C-57	20.11982 78.81897	Forest Land	Non Tribal
29	Yavatmal	PKD					4th Y.O.		1	34.420	1600 (Model-2) (New)	17845	**6.57**	Maregaon	Maregaon	Kegaon	C-51B	20.03114 78.80416		Non Tribal
			Total 4th Y.O.					**164.840**	**8**	**164.840**			**31.47**							

Sr. No.	Circle	Division	Name of the Project	Project ID	Final sanction	Area of the Project (ha)	Year of Operation (i.e. SYO, TYO etc.)	Projectwise total area of SYO, TYO etc.	Total No of sites w.r.t. col. 12	Area of maintenance of plantation at each site	Plantation model being used (no. of plants per ha.)	Rate/ ha (Rs)	Amount (Rs. Lakhs)	Details of Area under treatment						
														Range	Round	Beat	Compartment no.	Latlong	Whether forest land or non - forest land	Whether tribal /remote area or non-tribal area
1	2	3	4	5	6	7	8	9	10	11	12	13	14	15	16	17	18	19	20	21
30	Yavatmal	Yavatmal	Jigaon Major Irr. Project in Buldhana District.	2169	MoEFP.No.-8/148 /2006-FC Dt. 24th June 2016.	71.92	5th Y.O.	71.920	1	40.850	1111 (Model-4) (New)	17845	**7.80**	Ner	Mozar	Mozar	81	N 20°30'26" E 77°48'0"	Non Forest Land	Non Tribal
31	Yavatmal	Yavatmal					5th Y.O.		1	31.070	1111 (Model-4) (New)	17845	**5.93**	Ner	Mozar	Uttar Wadhona	393	N 20°44.90"	Non Forest Land	Non Tribal
32	Yavatmal	Pusad	Jigaon	2169	GOI8-148/2006-FCdt. 6/24/2016	700.61	5th Y.O.	3.000	1	3.000	1111 (Model-4) (New)	17845	**0.57**	Mahagaon	Mudana	Mudana	16	N-19.71.12 E-77.59.18	Non Forest Land	Non tribal
33	Yavatmal	Pusad					5th Y.O.	108.000	1	108.000	400 (Model-400+1100)	61279	**70.81**	Umarkhed	Krishnapur	Krishnapur	815	N-19.36.52 E-77.50.36		Non tribal
34	Yavatmal	Pusad					5th Y.O.	20.000	1	20.000	400 (Model-400+1100)	61279	**13.11**	Umarkhed	Marsul	Marsul	64	N-19.37.84 E-77.41.41		Non tribal
35	Yavatmal	Pusad					5th Y.O.	20.000	1	20.000	1111 (Model-4) (New)	17845	**3.82**	Umarkhed	Marsul	Marsul	64	N-19.37.84 E-77.41.41		Non tribal
36	Yavatmal	Pusad					5th Y.O.	6.650	1	6.650	1111 (Model-4) (New)	17845	**1.27**	Umarkhed	Krishnapur	Vidul-2	138	N.19.36.52 E-77.50.36		Non tribal
37	Yavatmal	Pusad					5th Y.O.	25.000	1	25.000	400 (Model-400+1100)	61279	**16.39**	Umarkhed	Krishnapur	Prinji	31	N-19.38.01 E-77.46.12		Non tribal
38	Yavatmal	Pusad					5th Y.O.	15.000	1	15.000	400 (Model-400+1100)	61279	**9.84**	Umarkhed	Umarkhed	Umarkhed (Amawan)	1	N-19.44.44 E-77.30.46		Non tribal
39	Yavatmal	Pusad					5th Y.O.	35.150	1	35.150	1111 (Model-4) (New)	17845	**6.71**	Umarkhed	Umarkhed	Umarkhed (Amawan)	1	N-19.44.44 E-77.30.46		Non tribal
40	Yavatmal	Pusad					5th Y.O.	15.000	1	15.000	1111 (Model-4) (New)	17845	**2.86**	Umarkhed	Krishnapur	Vidul-1	56	N-19.38.65 E-77.42.33		Non tribal
41	Yavatmal	Pusad					5th Y.O.	11.000	1	11.000	400 (Model-400+1100)	61279	**7.21**	Digras	Digras	Sakara	74	N-20.04.06 E-77.38.25		Non tribal
			Total 5th Y.O.					**330.720**	**12**	**330.720**			**146.34**	**-**	**-**					
42	Yavatmal	Pkd	Lower Paingaga	11074	-F.NO.8-129/2002EC41668	100	7th Y.O.	20.000	1	20.000	400 (Model-400+1100)	13074	**2.80**	Gharanji	Ghatanji	Shivani	523	20.10.53 78.23.30	Non Forest Land	Tribal
			Total 7th Y.O.					**20.000**	**1**	**20.000**			**2.80**							

Sr. No.	Circle	Division	Name of the Project	Project ID	Final sanction	Area of the Project (ha)	Year of Operation (i.e. SYO, TYO etc.)	Projectwise total area of SYO, TYO etc.	Total No of sites w.r.t. col. 12	Area of maintenance of plantation at each site	Plantation model being used (no. of plants per ha.)	Rate/ ha (Rs)	Amount (Rs. Lakhs)	Details of Area under treatment						
														Range	Round	Beat	Compartment no.	Latlong	Whether forest land or non - forest land	Whether tribal /remote area or non-tribal area
1	2	3	4	5	6	7	8	9	10	11	12	13	14	15	16	17	18	19	20	21
43	Yavatmal	Yavatmal	Mandev old Temple	11813	G.O.I.6-MHB020/2010-BHO/ 1945Dt.02/10/2012	1.00	8th Y.O.	1.000	1	1.000	400 (Model-400+1100)	6864	**0.07**	Hiwari	Kinhi	Manpur	495	N 20°30'39.88" E 78°01'85.58"	Forest Land	Non Tribal
			Total 8th Y.O.					**1.000**	**1**	**1.000**			**0.07**							
44	Yavatmal	Yavatmal	400 K.V. Wardha Parli Transmission Line	11895	G.O.I.Govt. of India No.6/ MHC/007/2011-12/ BHO /3176Dt.31/05/2011	19.37	10th Y.O.	19.370	1	19.370	400 (Model-400+1100)	6864	**1.42**	Hiwari	Kolambi	Akola Bajar	Bardtanda Com No.291 Coup No.X	N 20°10'13" E 78°7'15"	Forest Land	Non Tribal
45	Yavatmal	Pusad	400 K.V. Wardha Parli Transmission Line	11895	MoEFGovt. of India No.6/MHC/007 / 2011-12 /BHO /317640694	23.75	10th Y.O.	23.750	1	23.750	400+ 1100	6864	**1.74**	Mahagaon	Dharmoha	Temburdra	423	N-19.43.29 E-77.40.47	Forest Land	Non Tribal
			Total 10th Y.O.					**43.120**	**2**	**43.120**			**3.17**							
			Grand total of Yavatmal circle					**988.840**	**45**	**988.840**			**304.53**							
			Grand Total of S.Y.O. to 10th Y.O. Works					**6118.664**	**580**	**9440.949**			**2020.09**							

Annexure – IV

(CAT Plan)

ANNUAL PLAN OF OPERATIONS 2022-23 FOR WORKS UNDER CAMPA

Annexure - IV ---------- FOR PLANTATIONS TO TAKEN UNDER CATCHMENT AREA TREATMENT PLAN

Sr. No.	Circle	Division	Name of the Project	Project ID	Final sanction	Project Area (ha)	Details/ Particulars of work as per stipulated condition			Total Area/Total Quantum of specified work mentioned in col. 11	Total No of sites with respect to column. 12	Rate per unit (Rs.)	Amount (Rs. Lakhs)	Details of Area to be treated						
							Condition no. in the sanction letter	Type of plantation	Year of plantation (i.e. PPO/FYO/ SYO/TYO etc.)					Range	Round	Beat	Compartment no.	Latlong	Wheter forest land or non - forest land	Tribal/remote area or non-tribal area
1	2	3	4	5	6	7	8	9	10	11	12	13	14	15	16	17	18	19	20	21
1	Dhule	Jalgaon	Varkhed Londhe Barrage Medium Irrigation Project Jalgaon	12012 /(26)	Dy Inspector General of Forest8-128/ 2011-FC, dt. 26-Sept. 2019	94.95	12	Non Irrigated	FYO	25 Ha	1	168678	**42.17**	Chalisgaon	Ghodegaon	Upkhed	317	20 34 04.01 N 74 49 25.79 E	FL	NT
2	Dhule	Jalgaon					12	Non Irrigated	FYO	25Ha	1	168678	**42.17**	Chalisgaon	Ghodegaon	Upkhed	317	20 34 04.01 N 74 49 25.79 E	FL	NT
3	Dhule	Jalgaon					12	Non Irrigated	FYO	20Ha	1	168678	**33.73**	Chalisgaon	Ghodegaon	Upkhed	318	20 35 10.76 N 74 49 22.62E	FL	NT
4	Dhule	Jalgaon					12	Non Irrigated	FYO	25Ha	1	168678	**42.17**	Chalisgaon	Ghodegaon	Upkhed	318	20 34 54.37 N 74 50 22.94 E	FL	NT
5	Dhule	Jalgaon					12	Non Irrigated	FYO	30Ha	1	168678	**49.87**	Chalisgaon	Ghodegaon	Upkhed	319	30 35 07.25 N 74 50 22.94 E	FL	NT
6	Dhule	Jalgaon					12	Non Irrigated	FYO	20Ha	1	168678	**33.73**	Chalisgaon	Ghodegaon	Upkhed	602	20 31 48.12 N 74 47 10.22E	FL	NT
			Grand total of Dhule circle			**94.95**				**145**	**6**		**243.83**							
1	Nagpur	Wardha	Dham River Project	11886	GOIF.No6-MHC 1/8/2010-BHO/6806, dt. 6/7/2020	36.23		CAT	PPO	10	1	306552	**30.66**	Karanja	Dhanoli	Dhanoli	51 RF	N-21 04 50.0 E-78 34 47.0	Forest	NT
2	Nagpur	Wardha						CAT	PPO	5	1	306552	**15.33**	Arvi	Pimplakhuta	Pimpalkhuta	169 RF	N-20 97 29 E-78 41 05	Forest	NT
						36.23				**15**	**2**		**45.98**							
4	Nagpur	Wardha	Dham River Project	11886		36.23		CAT	Looseboalder (LBS)	10	1	---	**1.50**	Kharangana	Masod	Sonegaon (N.)	184,185 PF	N-21'00'00 E-78'30'56	Forest	NT
5	Nagpur	Wardha						CAT		50	1	---	**7.50**	Kharangana	Bagdapur	Dhaga (s.)	167 PF	N-21'24'52 E-78'27'90	Forest	NT
6	Nagpur	Wardha						CAT		50	1	---	**7.50**	Kharangana	Bagdapur	Dhaga (s.)	168 PF	N-21'21'23 E-78'28'90	Forest	NT
7	Nagpur	Wardha						CAT		10	1	---	**1.50**	Kharangana	Kharangana	Kachnur	191 PF	N-20.935681 E- 78.460585	Forest	NT
8	Nagpur	Wardha						CAT		30	1	---	**4.50**	Kharangana	Bagdapur	Ajandho (N.)	197,198 RF	N-21'04'40 E-78'2830	Forest	NT
9	Nagpur	Wardha						CAT		30	1	---	**4.50**	Kharangana	Bagdapur	Ajandho (N.)	196 RF	N-21'05'42 E-78'27'55	Forest	NT

Sr. No.	Circle	Division	Name of the Project	Project ID	Final sanction	Project Area (ha)	Details/ Particulars of work as per stipulated condition			Total Area/Total Quantum of specified work mentioned in col. 11	Total No of sites with respect to column. 12	Rate per unit (Rs.)	Amount (Rs. Lakhs)	Details of Area to be treated						
							Condition no. in the sanction letter	Type of plantation	Year of plantation (i.e. PPO/FYO/ SYO/TYO etc.)					Range	Round	Beat	Compartment no.	Latlong	Wheter forest land or non - forest land	Tribal/remote area or non-tribal area
1	2	3	4	5	6	7	8	9	10	11	12	13	14	15	16	17	18	19	20	21
10	Nagpur	Wardha	Dham River Project	11886		36.23		CAT	Looseboalder (LBS)	50	1	---	**4.50**	Kharangana	Bagdapur	Bangdapur (W.)	219,220 RF	N-21'06'77 E-78'49'50	Forest	NT
11	Nagpur	Wardha						CAT		50	1	---	**4.50**	Kharangana	Bagdapur	Bangdapur (W.)	221 RF	N-21'03'84 E-78'49'21	Forest	NT
12	Nagpur	Wardha						CAT		75	1	---	**7.20**	Karanja	Karanja	Linga	132 PF	N 21 04 00.0, E 78 25 00.0	Forest	NT
13	Nagpur	Wardha						CAT		40	1	---	**3.80**	Karanja	Bangadapur	Agargaon	160 PF	N 21 06 20.0, E 78 32 22.0	Forest	NT
14	Nagpur	Wardha						CAT		5	1	---	**0.40**	Arvi	Bramhanwada	Panjra Gondi	174 RF	N-21 02 14 E-78 24 17	Forest	NT
										400	**11**		**47.40**							
16	Nagpur	Wardha	Dham River Project	11886		36.230		CAT	Gabion	10	1	---	**3.50**	Kharangana	Masod	Sonegaon (N.)	184,185 PF	N-21'00'00 E-78'30'56	Forest	NT
17	Nagpur	Wardha						CAT		10	1	---	**3.50**	Kharangana	Bagdapur	Dhaga (s.)	167 PF	N-21'24'52 E-78'27'90	Forest	NT
18	Nagpur	Wardha						CAT		10	1	---	**3.50**	Kharangana	Bagdapur	Dhaga (s.)	168 PF	N-21'21'23 E-78'28'90	Forest	NT
19	Nagpur	Wardha						CAT		10	1	---	**3.50**	Kharangana	Bagdapur	Dhaga (N.)	201 RF	N-21'03'23 E-78'28'44	Forest	NT
20	Nagpur	Wardha						CAT		15	1	---	**5.25**	Kharangana	Bagdapur	Ajandho (N.)	197, RF	N-21'05'39 E-78'27'40	Forest	NT
21	Nagpur	Wardha						CAT		15	1	---	**5.25**	Kharangana	Bagdapur	Ajandho (N.)	196 RF	N-21'05'34 E-78'27'47	Forest	NT
22	Nagpur	Wardha						CAT		15	1	---	**5.25**	Kharangana	Borgaon (Gondi)	Susund (N.)	227 RF	N-20'59'71 E-78'31'61	Forest	NT
23	Nagpur	Wardha						CAT		12	1	---	**4.20**	Kharangana	Borgaon (Gondi)	Susund (S.)	212 PF	N-20'59'70 E-78'32'39	Forest	NT
24	Nagpur	Wardha						CAT		10	1	---	**5.30**	Karanja	Sindivihiri	Yenidodka	48 RF	N 21 02 15.0 E 78 34 18.0	Forest	NT
25	Nagpur	Wardha						CAT		10	1	---	**5.30**	Karanja	Sindivihiri	Yenidodka	47 RF	N 21 02 52.0 E 78 34 58.0	Forest	NT
26	Nagpur	Wardha						CAT		10	1	---	**5.30**	Karanja	Sindivihiri	Sindivihiri	172 PF	N 21 02 00.0 E 78 32 00.0	Forest	NT
27	Nagpur	Wardha						CAT		15	1	---	**7.95**	Karanja	Sindivihiri	Sindivihiri	172 PF	N 21 03 07.0 E 78 33 09.0	Forest	NT
28	Nagpur	Wardha						CAT		15	1	---	**7.95**	Karanja	Sindivihiri	Sindivihiri	173 PF	N 21 01 45.0 E 78 32 48.0	Forest	NT

Sr. No.	Circle	Division	Name of the Project	Project ID	Final sanction	Project Area (ha)	Details/ Particulars of work as per stipulated condition			Total Area/Total Quantum of specified work mentioned in col. 11	Total No of sites with respect to column. 12	Rate per unit (Rs.)	Amount (Rs. Lakhs)	Details of Area to be treated						
							Condition no. in the sanction letter	Type of plantation	Year of plantation (i.e. PPO/FYO/ SYO/TYO etc.)					Range	Round	Beat	Compartment no.	Latlong	Wheter forest land or non - forest land	Tribal/remote area or non-tribal area
1	2	3	4	5	6	7	8	9	10	11	12	13	14	15	16	17	18	19	20	21
29	Nagpur	Wardha	Dham River Project	11886		36.23		CAT	Gabion	2	1	---	**1.06**	Karanja	Karanja	Linga	184 RF	N 21 04 02.0 E 78 25 04.0	Forest	NT
30	Nagpur	Wardha						CAT		20	1	---	**10.60**	Karanja	Bangadapur	Joga	176 PF	N 21 06 23.0 E 78 33 24.0	Forest	NT
31	Nagpur	Wardha						CAT		10	1	---	**5.30**	Karanja	Bangadapur	Agargaon	160 PF	N 21 06 17.0 E 78 32 18.0	Forest	NT
32	Nagpur	Wardha						CAT		10	1	---	**5.30**	Karanja	Garpit	Dhamkund C.	152 RF	N 21 04 36.0 E 78 20 38.0	Forest	NT
33	Nagpur	Wardha						CAT		9	1		**3.02**	Arvi	Bramhanwada	Panjra Gondi	174 RF	N-21 02 08 E-78 24 19	Forest	NT
										208	**18**		**91.03**							
35	Nagpur	Wardha	Dham River Project	11886		36.230		CAT	Nala Deepening	250	1	---	**2.50**	Kharangana	Masod	Ladgad (S.)	186,187 PF	N-20'59'25 E-78'28'40	Forest	NT
36	Nagpur	Wardha						CAT		200	1	---	**2.00**	Kharangana	Bagdapur	Dhaga (s.)	168 PF	N-21'21'10 E-78'29'05	Forest	NT
37	Nagpur	Wardha						CAT		200	1	---	**2.00**	Kharangana	Bagdapur	Dhaga (N.)	199 RF	N-21'04'23 E-78'28'25	Forest	NT
38	Nagpur	Wardha						CAT		200	1	---	**2.00**	Kharangana	Borgaon (Gondi)	Susund (N.)	227 RF	N-20'59'93 E-78'31'89	Forest	NT
39	Nagpur	Wardha						CAT		100	1	---	**1.00**	Kharangana	Masod	Masod (N.)	208,209 RF	N-20'01'00 E-78'29'00	Forest	NT
40	Nagpur	Wardha						CAT		500	1	---	**6.50**	Karanja	Sindivihiri	Sindivihiri	173 PF	N 21 02 14.0, E 078 34 18.0	Forest	NT
41	Nagpur	Wardha						CAT		500	1	---	**6.50**	Karanja	Sindivihiri	Sindivihiri	174 PF	N 21 02 46.0, E 078 33 47.0	Forest	NT
42	Nagpur	Wardha						CAT		300	1	---	**3.00**	Arvi	Wadhona	Panjara Gondi	177 RF	N-21 01 56 E-78 36 83	Forest	NT
										2250	**8**		**25.50**							
44	Nagpur	Wardha	Dham River Project	11886		36.230		CAT	Khodtale	1	1	---	**3.20**	Kharangana	Borgaon (Gondi)	Susund (N.)	227 RF	N-21'00'29 E-78'30'59	Forest	NT
45	Nagpur	Wardha						CAT	Panwata Kholikaran	1	1	---	**0.50**	Kharangana	Bangdapur	Ajandho (S.)	194 RF	N-21'08'63 E-78'44'94	Forest	NT
46	Nagpur	Wardha						CAT	Water Hole	1	1	---	**0.50**	Kharangana	Masod	Masod (E.)	212 RF	N-21'00'53 E-78'27'49	Forest	NT
										3	**3**		**4.20**							

Sr. No.	Circle	Division	Name of the Project	Project ID	Final sanction	Project Area (ha)	Details/ Particulars of work as per stipulated condition			Total Area/Total Quantum of specified work mentioned in col. 11	Total No of sites with respect to column. 12	Rate per unit (Rs.)	Amount (Rs. Lakhs)	Details of Area to be treated						
							Condition no. in the sanction letter	Type of plantation	Year of plantation (i.e. PPO/FYO/ SYO/TYO etc.)					Range	Round	Beat	Compartment no.	Latlong	Wheter forest land or non - forest land	Tribal/remote area or non-tribal area
1	2	3	4	5	6	7	8	9	10	11	12	13	14	15	16	17	18	19	20	21
48	Nagpur	Wardha	Dham River Project	11886		36.23		CAT	Trenches	30.00	1	---	**12.00**	Kharangana	Bangdapur	Ajandho (N.)	197,198 RF	N-21'05'24 E-78'28'26	Forest	NT
49	Nagpur	Wardha						CAT		30.00	1	---	**12.00**	Kharangana	Bangdapur	Bangdapur (W.)	219 RF	N-21'06'77 E-78'29'50	Forest	NT
50	Nagpur	Wardha						CAT		30.00	1	---	**12.00**	Kharangana	Bangdapur	Ajandho (S.)	194 RF	N-21'04'13 E-78'26'40	Forest	NT
51	Nagpur	Wardha						CAT		30.00	1	---	**12.00**	Kharangana	Bangdapur	Ajandho (S.)	202 RF	N-21'07'22 E-78'46'78	Forest	NT
52	Nagpur	Wardha						CAT		10.00	1	---	**4.00**	Kharangana	Borgon gondi	Saheli	228 RF	N-20'59'07 E-78'30'79	Forest	NT
										130.00	**5**		**52.00**							
54	Nagpur	Wardha	Dham River Project	11886		36.230		CAT	CCT (in Km.)	15.00	1	---	**6.00**	Kharangana	Bangdapur	Ajandho (N.)	196 RF	N-21'05'25 E-78'27'32	Forest	NT
55	Nagpur	Wardha						CAT		5.00	1	---	**2.00**	Kharangana	Bangdapur	Ajandho (N.)	198 RF	N-21'04'45 E-78'29'05	Forest	NT
										20.00	**2**		**8.00**							
57	Nagpur	Wardha	Dham River Project	11886		36.230		CAT	Deep CCT	30.00	1	---	**4.50**	Karanja	Sindivihiri	Sindivihiri	173 PF	N 21 02 01.0, E 078 34 04.0	Forest	NT
58	Nagpur	Wardha						CAT		20.00	1	---	**3.00**	Karanja	Sindivihiri	Sindivihiri	172 PF	N 21 03 00.0, E 078 33 00.0	Forest	NT
59	Nagpur	Wardha						CAT		30.00	1	---	**4.50**	Karanja	Sindivihiri	Sindivihiri	174 PF	N 21 02 45.0, E 078 33 48.0	Forest	NT
60	Nagpur	Wardha						CAT		25.00	1	---	**3.75**	Karanja	Bangadapur	Joga	176 PF	N 21 06 18.0, E 078 33 22.0	Forest	NT
61	Nagpur	Wardha						CAT		15.00	1	---	**2.25**	Karanja	Bangadapur	Agargaon	57 RF	N 21 05 10.0, E 078 32 12.0	Forest	NT
62	Nagpur	Wardha						CAT		25.00	1	---	**3.75**	Karanja	Bangadapur	Agargaon	160 PF	N 21 06 16.0, E 078 32 18.0	Forest	NT
63	Nagpur	Wardha						CAT		10.00	1	---	**1.50**	Karanja	Bangadapur	Hetikundi	162 PF	N 21 07 00.0, E 078 29 00.0	Forest	NT
64	Nagpur	Wardha						CAT		15.00	1	---	**2.25**	Karanja	Garpit	Dhamkund C.	152 RF	N 21 04 40.0, E 078 20 36.0	Forest	NT
65	Nagpur	Wardha						CAT	Deep CCT	4.00	1	---	**1.60**	Arvi	Wadhona	Panjra Gondi	49 SN	N-21 01 56 E-78 36 83	Forest	NT
66	Nagpur	Wardha						CAT		2.25	1	---	**0.90**	Arvi	Wadhona	Panjra Gondi	114 SN	N-21 00 36 E-78 37 54	Forest	NT
67	Nagpur	Wardha						CAT		2.30	1	---	**0.92**	Arvi	Wadhona	Panjra Gondi	149 SN	N-21 00 60 E-78 37 16	Forest	NT
										178.55	**11**		**28.92**							

Sr. No.	Circle	Division	Name of the Project	Project ID	Final sanction	Project Area (ha)	Details/ Particulars of work as per stipulated condition			Total Area/Total Quantum of specified work mentioned in col. 11	Total No of sites with respect to column. 12	Rate per unit (Rs.)	Amount (Rs. Lakhs)	Details of Area to be treated						
							Condition no. in the sanction letter	Type of plantation	Year of plantation (i.e. PPO/FYO/ SYO/TYO etc.)					Range	Round	Beat	Compartment no.	Latlong	Wheter forest land or non - forest land	Tribal/remote area or non-tribal area
1	2	3	4	5	6	7	8	9	10	11	12	13	14	15	16	17	18	19	20	21
69	Nagpur	Wardha	Dham River Project	11886		36.23		CAT	Vantalao	1	1	---	**1.95**	Karanja	Dhanoli	Rahati	54 RF	N 21 04 40.0 E 078 33 00.0	Forest	NT
70	Nagpur	Wardha						CAT		1	1	---	**1.95**	Karanja	Karanja	Umari	191 RF	N 21 04 05.0, E 078 26 09.0	Forest	NT
71	Nagpur	Wardha						CAT		1	1	---	**3.10**	Arvi	Wadhona	Panjara Gondi	176 RF	N-21 01 58 E-78 23 47	Forest	NT
72	Nagpur	Wardha						CAT		1	1	---	**3.10**	Arvi	Wadhona	Hiwara	135 PF	N-21 23 31 E-78 20 25	Forest	NT
73	Nagpur	Wardha						CAT		1	1	---	**3.10**	Arvi	Bramanwada	Gaprit E	188 RF	N-21 03 07 E-78 24 47	Forest	NT
74	Nagpur	Wardha						CAT		1	1	---	**3.10**	Arvi	Bramanwada	Panjara E	174 RF	N-21 01 59 E-78 23 48	Forest	NT
										6	**6**		**16.30**							
			Total for Wardha Division							**3210.55**	**66**		**319.33**							
			Grand total of Nagpur circle							**3210.55**	**66**		**319.33**							
1	Thane	Shahapur	Mumari Dam Project	11303	G.O.IF.No.8/ 54/2005-FC Government of Environment and Forest, dt. 02.05.2014	412.135	7(VI)	Mix Plantation	TYO	25	1	11731	3.14	Shahapur	Dolkhamb	Kharada	692	N19.48.35.78 E 73.53.99.46	Forest Land	Trible
2									TYO	2	1	11731	0.25	Shahapur	Dolkhamb	Kharada	693	N19.49.54.82 E 73.52.77.92	Forest Land	Trible
3									TYO	4	1	18225	0.78	Shahapur	Dolkhamb	Kharada	693	N19.49.60.18 E 73.52.80.88	Forest Land	Trible
4									TYO	28	1	18225	5.46	Shahapur	Dolkhamb	Kharada	692	N19.48.01.02 E 73.55.86.87	Forest Land	Trible
5									TYO	2	1	14496	0.31	Shahapur	Dolkhamb	Kharada	693	N19.49.68.06 E 73.52.94.1	Forest Land	Trible
			Total							**61**	**5**		**9.94**							
6	Thane	Shahapur	Mumari Dam Project	11303	G.O.IF.No.8/ 54/2005-FC Government of Environment and Forest, dt. 02.05.2014	412.135	7(VI)	Mix Plantation	4thYO	12	1	9217	1.18	Shahapur	Dhasai	Sarangpuri	672	N19.29.89.5 E 73.28.34.0	Forest Land	Tribal
7									4thYO	10	1	9217	0.99	Shahapur	Dhasai	Sarangpuri	674	N19.29.51.5 E 73.26.58.0	Forest Land	Tribal
8									4thYO	15	1	9217	1.48	Shahapur	Dhasai	Shenva	687	N19.28.41.9 E 73.26.69.8	Forest Land	Tribal
9									4thYO	50	1	9217	4.93	Shahapur	Dolkhamb	Kharada	690 Part I	N19.29.21.9 E 73.30.19.2	Forest Land	Tribal

Sr. No.	Circle	Division	Name of the Project	Project ID	Final sanction	Project Area (ha)	Details/ Particulars of work as per stipulated condition			Total Area/Total Quantum of specified work mentioned in col. 11	Total No of sites with respect to column. 12	Rate per unit (Rs.)	Amount (Rs. Lakhs)	Details of Area to be treated						
							Condition no. in the sanction letter	Type of plantation	Year of plantation (i.e. PPO/FYO/ SYO/TYO etc.)					Range	Round	Beat	Compartment no.	Latlong	Wheter forest land or non - forest land	Tribal/remote area or non-tribal area
1	2	3	4	5	6	7	8	9	10	11	12	13	14	15	16	17	18	19	20	21
10	Thane	Shahapur	Mumari Dam Project	11303	G.O.IF.No.8/ 54/2005-FC Government of Environment and Forest, dt. 02.05.2014	412.135	7(VI)	Mix Plantation	4thYO	50	1	9217	4.93	Shahapur	Dolkhamb	Kharada	691 Part I	N19.29.95.0 E 73.30.79.0	Forest Land	Tribal
11									4thYO	13	1	12464	1.73	Shahapur	Dhasai	Sarangpuri	672	N19.29.76.0 E 73.28.59.0	Forest Land	Tribal
12									4thYO	20	1	12464	2.67	Shahapur	Dhasai	Sarangpuri	674	N19.26.76.6 E 73.26.66.5	Forest Land	Tribal
13									4thYO	25	1	12464	3.33	Shahapur	Dhasai	Shenva	687	N19.28.36.7 E 73.27.31.0	Forest Land	Tribal
14									4thYO	25	1	12464	3.33	Shahapur	Dolkhamb	Kharada	690 Part II	N19.29.78.2 E 73.30.82.5	Forest Land	Tribal
15									4thYO	25	1	12464	3.33	Shahapur	Dolkhamb	Kharada	691 Part II	N19.29.77.1 E 73.30.29.2	Forest Land	Tribal
16									4thYO	35	1	10474	3.92	Shahapur	Dhasai	Sarangpuri	674	N19.29.53.2 E 73.27.26.2	Forest Land	Tribal
17									4thYO	25	1	10474	2.80	Shahapur	Dhasai	Shenva	95,96	N19.27.90.5 E 73.27.21.7	Forest Land	Tribal
18									4thYO	25	1	10474	2.80	Shahapur	Dhasai	Sarangpuri	276 part I	N19.27.87.8 E 73.27.44.5	Forest Land	Tribal
19									4thYO	25	1	10474	2.80	Shahapur	Dhasai	Sarangpuri	23,280	N19.28.28.0 E 73.25.46.3	Forest Land	Tribal
20									4thYO	25	1	10474	2.80	Shahapur	Dhasai	Sarangpuri	250	N19.26.16.1 E 73.26.63.4	Forest Land	Tribal
21									4thYO	25	1	10474	2.80	Shahapur	Dhasai	Sarangpuri	276 part I	N19.28.37.6 E 73.25.51.6	Forest Land	Tribal
22									4thYO	20	1	10474	2.24	Shahapur	Dhasai	Shenva	94	N19.28.18.7 E 73.25.95.5	Forest Land	Tribal
23									4thYO	20	1	10474	2.24	Shahapur	Dhasai	Shenva	199	N19.28.01.6 E 73.25.66.5	Forest Land	Tribal
24									4thYO	20	1	10474	2.24	Shahapur	Dhasai	Sarangpuri	675 Part I/204/2	N19.29.19.6 E 73.24.81.1	Forest Land	Tribal
25									4thYO	20	1	10474	2.24	Shahapur	Dhasai	Sarangpuri	675 Part II204/2	N19.29.23.8 E 73.24.68.8	Forest Land	Tribal

Sr. No.	Circle	Division	Name of the Project	Project ID	Final sanction	Project Area (ha)	Details/ Particulars of work as per stipulated condition			Total Area/Total Quantum of specified work mentioned in col. 11	Total No of sites with respect to column. 12	Rate per unit (Rs.)	Amount (Rs. Lakhs)	Details of Area to be treated						
							Condition no. in the sanction letter	Type of plantation	Year of plantation (i.e. PPO/FYO/ SYO/TYO etc.)					Range	Round	Beat	Compartment no.	Latlong	Wheter forest land or non - forest land	Tribal/remote area or non-tribal area
1	2	3	4	5	6	7	8	9	10	11	12	13	14	15	16	17	18	19	20	21
26	Thane	Shahapur	Mumari Dam Project	11303	G.O.IF.No.8/ 54/2005-FC Government of Environment and Forest, dt. 02.05.2014	412.135	7(VI)	Mix Plantation	4thYO	25	1	10474	2.80	Shahapur	Dhasai	Sarangpuri	247	N19.29.54.3 E 73.27.67.0	Forest Land	Tribal
27									4thYO	25	1	10474	2.80	Shahapur	Dhasai	Shenva	95 Part I	N19.28.02.3 E 73.27.88.8	Forest Land	Tribal
28									4thYO	25	1	10474	2.80	Shahapur	Dhasai	Shenva	95 Part II	N19.27.99.6 E 73.28.49.6	Forest Land	Tribal
			Total							**560**	**23**		**63.22**							
			Total for Shahapur division							**621**	**28**		**73.16**							
29	Thane	Jawhar	Diversion of 445.29 ha. (Previously submitted for 531.186 ha.) of forest land for construction of Deharji Medium Irrigation Project Tal. Vikramgad. District Thane, Maharashtra.	11670/ (40)	MoEF No. 8-10/2009.FC, dt. 2/19/2016	445.29	As Per stitupulated condition No.9	2500 Per Ha	ppo	15	1	149765	24.04	Vikramgad	Sakhara	Chouk	239	N19 46.942 E73 10.691	forest land	Tribal
30								2500 Per Ha	ppo	15	1	149765	24.04		Sakhara	Khuded	258	N19 50.525 E73 11.007	forest land	Tribal
31								2500 Per Ha	ppo	10	1	149765	16.02	South Jawhar	Dengachimet	Kashivali	259	N 19 52.259 E 73 11.514	forest land	Tribal
32								2500 Per Ha	ppo	10	1	149765	16.02	South Jawhar	Dengachimet	Kashivali	259	N 19 52.643 E 73 11.305	forest land	Tribal
33								2500 Per Ha	ppo	10	1	149765	16.02	South Jawhar	Dengachimet	Kashivali	259	N 19 52.259 E 73 11.514	forest land	Tribal
34								2500 Per Ha	ppo	10	1	149765	16.02	South Jawhar	Dengachimet	Kashivali	259	N 19 52.643 E 73 11.305	forest land	Tribal
35								2500 Per Ha	ppo	10	1	149765	16.02	South Jawhar	Jawhar	Kadachimet	260	N 19.865485 E 073.206034	forest land	Tribal
36								2500 Per Ha	ppo	10	1	149765	16.02	South Jawhar	Jawhar	Kadachimet	260	N 19.869186 E 073.208043	forest land	Tribal
37								2500 Per Ha	ppo	10	1	149765	16.02	South Jawhar	Jawhar	Kadachimet	260	N 19.864432 E 073.210247	forest land	Tribal
38								2500 Per Ha	ppo	10	1	149765	16.02	South Jawhar	Jawhar	Kadachimet	261	N 19.856030 E 073.211894	forest land	Tribal
39								2500 Per Ha	ppo	10	1	149765	16.02	South Jawhar	Jawhar	Kadachimet	261	N 19.854002 E 073.211963	forest land	Tribal
40								2500 Per Ha	ppo	10	1	149765	16.02	South Jawhar	Jawhar	Kadachimet	261	N 19.858491 E 073.209661	forest land	Tribal
			Total PPO							**130**	**12**		**208.32**							

Sr. No.	Circle	Division	Name of the Project	Project ID	Final sanction	Project Area (ha)	Details/ Particulars of work as per stipulated condition			Total Area/Total Quantum of specified work mentioned in col. 11	Total No of sites with respect to column. 12	Rate per unit (Rs.)	Amount (Rs. Lakhs)	Details of Area to be treated						
							Condition no. in the sanction letter	Type of plantation	Year of plantation (i.e. PPO/FYO/ SYO/TYO etc.)					Range	Round	Beat	Compartment no.	Latlong	Wheter forest land or non - forest land	Tribal/remote area or non-tribal area
1	2	3	4	5	6	7	8	9	10	11	12	13	14	15	16	17	18	19	20	21
41	Thane	Jawhar	Diversion of 445.29 ha. (Previously submitted for 531.186 ha.) of forest land for construction of Deharji Medium Irrigation Project Tal. Vikramgad. District Thane, Maharashtra.	11670/ (40)	MoEF No. 8-10/2009.FC, dt. 2/19/2016	445.29	As Per stitupulated condition No.9	Gabbion Structure	--	--	1	-	0.16	Vikramgad	Balapur	Shevta	231	19°49'54.01"N 73° 7'5.17"E	forest land	Tribal
42	Thane	Jawhar						Gabbion Structure	--	--	1	-	0.16	Vikramgad	Balapur	Shevta	231	19°49'53.84"N 73° 7'8.32"E	forest land	Tribal
43	Thane	Jawhar						Gabbion Structure	--	--	1	-	0.17	Vikramgad	Balapur	Shevta	231	19°49'53.90"N 73° 7'11.05"E	forest land	Tribal
44	Thane	Jawhar						Gabbion Structure	--	--	1	-	0.16	Vikramgad	Balapur	Shevta	231	19°49'55.37"N 73° 7'14.59"E	forest land	Tribal
45	Thane	Jawhar						Gabbion Structure	--	--	1	-	0.15	Vikramgad	Balapur	Shevta	231	19°49'46.08"N 73° 7'7.03"E	forest land	Tribal
46	Thane	Jawhar						Gabbion Structure	--	--	1	-	0.16	Vikramgad	Sakhara	Khuded	257	19°50'49.28"N 73° 8'35.48"E	forest land	Tribal
47	Thane	Jawhar						Gabbion Structure	--	--	1	-	0.15	Vikramgad	Sakhara	Khuded	257	19°50'47.38"N 73° 8'36.73"E	forest land	Tribal
48	Thane	Jawhar						Gabbion Structure	--	--	1	-	0.16	Vikramgad	Sakhara	Khuded	257	19°50'55.32"N 73° 8'38.37"E	forest land	Tribal
49	Thane	Jawhar						Gabbion Structure	--	--	1	-	0.16	Vikramgad	Sakhara	Khuded	257	19°50'57.50"N 73° 8'38.80"E	forest land	Tribal
50	Thane	Jawhar						Gabbion Structure	--	--	1	-	0.14	Vikramgad	Sakhara	Khuded	257	19°50'58.09"N 73° 8'55.89"E	forest land	Tribal
51	Thane	Jawhar						Gabbion Structure	--	--	1	-	0.16	Vikramgad	Sakhara	Khuded	257	19°50'56.42"N 73° 8'56.87"E	forest land	Tribal
52	Thane	Jawhar						Gabbion Structure	--	--	1	-	0.17	Vikramgad	Sakhara	Khuded	257	19°50'54.34"N 73° 8'59.54"E	forest land	Tribal
53	Thane	Jawhar						Gabbion Structure	--	--	1	-	0.19	Vikramgad	Sakhara	Khuded	257	19°50'51.05"N 73° 9'6.56"E	forest land	Tribal

Sr. No.	Circle	Division	Name of the Project	Project ID	Final sanction	Project Area (ha)	Details/ Particulars of work as per stipulated condition			Total Area/Total Quantum of specified work mentioned in col. 11	Total No of sites with respect to column. 12	Rate per unit (Rs.)	Amount (Rs. Lakhs)	Details of Area to be treated						
							Condition no. in the sanction letter	Type of plantation	Year of plantation (i.e. PPO/FYO/ SYO/TYO etc.)					Range	Round	Beat	Compartment no.	Latlong	Wheter forest land or non - forest land	Tribal/remote area or non-tribal area
1	2	3	4	5	6	7	8	9	10	11	12	13	14	15	16	17	18	19	20	21
54	Thane	Jawhar	Diversion of 445.29 ha. (Previously submitted for 531.186 ha.) of forest land for construction of Deharji Medium Irrigation Project Tal. Vikramgad. District Thane, Maharashtra.	11670/ (40)	MoEF No. 8-10/2009.FC, dt. 2/19/2016	445.29	As Per stitupulated condition No.9	Gabbion Structure	--	--	1	-	0.18	Vikramgad	Sakhara	Khuded	257	19°50'45.28"N 73° 9'1.68"E	forest land	Tribal
55	Thane	Jawhar						Gabbion Structure	--	--	1	-	0.17	Vikramgad	Sakhara	Khuded	257	19°50'29.24"N 73° 8'58.91"E	forest land	Tribal
56	Thane	Jawhar						Gabbion Structure	--	--	1	-	0.17	Vikramgad	Sakhara	Khuded	257	19°50'25.90"N 73° 9'4.59"E	forest land	Tribal
57	Thane	Jawhar						Gabbion Structure	--	--	1	-	0.19	Vikramgad	Sakhara	Khuded	257	19°50'13.85"N 73° 8'53.47"E	forest land	Tribal
58	Thane	Jawhar						Gabbion Structure	--	--	1	-	0.18	Vikramgad	Sakhara	Khuded	257	19°50'12.10"N 73° 8'52.28"E	forest land	Tribal
59	Thane	Jawhar						Gabbion Structure	--	--	1	-	0.16	Vikramgad	Sakhara	Khuded	257	19°49'48.64"N 73° 8'59.68"E	forest land	Tribal
60	Thane	Jawhar						Gabbion Structure	--	--	1	-	0.17	Vikramgad	Sakhara	Khuded	257	19°49'49.66"N 73° 9'0.91"E	forest land	Tribal
61	Thane	Jawhar						Gabbion Structure	--	--	1	-	0.16	Vikramgad	Sakhara	Khuded	257	19°49'50.49"N 73° 9'2.47"E	forest land	Tribal
62	Thane	Jawhar						Gabbion Structure	--	--	1	-	0.17	Vikramgad	Sakhara	Khuded	257	19°49'50.94"N 73° 9'4.16"E	forest land	Tribal
63	Thane	Jawhar						Gabbion Structure	--	--	1	-	0.17	Vikramgad	Sakhara	Khuded	257	19°49'57.97"N 73° 9'9.41"E	forest land	Tribal
64	Thane	Jawhar						Gabbion Structure	--	--	1	-	0.16	Vikramgad	Sakhara	Khuded	257	19°50'1.60"N 73° 9'7.76"E	forest land	Tribal
65	Thane	Jawhar						Gabbion Structure	--	--	1	-	0.17	Vikramgad	Sakhara	Khuded	257	19°50'2.40"N 73° 9'10.34"E	forest land	Tribal
66	Thane	Jawhar						Gabbion Structure	--	--	1	-	0.18	Vikramgad	Sakhara	Khuded	257	19°49'44.16"N 73° 9'3.81"E	forest land	Tribal

Sr. No.	Circle	Division	Name of the Project	Project ID	Final sanction	Project Area (ha)	Details/ Particulars of work as per stipulated condition			Total Area/Total Quantum of specified work mentioned in col. 11	Total No of sites with respect to column. 12	Rate per unit (Rs.)	Amount (Rs. Lakhs)	Details of Area to be treated						
							Condition no. in the sanction letter	Type of plantation	Year of plantation (i.e. PPO/FYO/ SYO/TYO etc.)					Range	Round	Beat	Compartment no.	Latlong	Wheter forest land or non - forest land	Tribal/remote area or non-tribal area
1	2	3	4	5	6	7	8	9	10	11	12	13	14	15	16	17	18	19	20	21
67	Thane	Jawhar	Diversion of 445.29 ha. (Previously submitted for 531.186 ha.) of forest land for construction of Deharji Medium Irrigation Project Tal. Vikramgad. District Thane, Maharashtra.	11670/ (40)	MoEF No. 8-10/2009.FC, dt. 2/19/2016	445.29	As Per stitupulated condition No.9	Gabbion Structure	--	--	1	-	0.18	Vikramgad	Sakhara	Khuded	257	19°49'39.16"N 73° 9'3.94"E	forest land	Tribal
68	Thane	Jawhar						Gabbion Structure	--	--	1	-	0.17	Vikramgad	Sakhara	Khuded	257	19°49'36.57"N 73° 9'3.60"E	forest land	Tribal
69	Thane	Jawhar						Gabbion Structure	--	--	1	-	0.17	Vikramgad	Sakhara	Khuded	257	19°49'41.20"N 73° 9'2.11"E	forest land	Tribal
70	Thane	Jawhar						Gabbion Structure	--	--	1	-	0.16	Vikramgad	Sakhara	Khuded	257	19°49'36.66"N 73° 9'0.06"E	forest land	Tribal
71	Thane	Jawhar						Gabbion Structure	--	--	1	-	0.16	South Jawhar	Dengachimet	Kashivali	259	N 19 52 14 E 073 11 16	forest land	Tribal
72	Thane	Jawhar						Gabbion Structure	--	--	1	-	0.16	South Jawhar	Dengachimet	Kashivali	259	N 19 51 50 E 073 11 25	forest land	Tribal
73	Thane	Jawhar						Gabbion Structure	--	--	1	-	0.17	South Jawhar	Dengachimet	Kashivali	259	N 19 51 51 E 073 11 28	forest land	Tribal
74	Thane	Jawhar						Gabbion Structure	--	--	1	-	0.16	South Jawhar	Dengachimet	Kashivali	255	N 19 51 52 E 073 11 10	forest land	Tribal
75	Thane	Jawhar						Gabbion Structure	--	--	1	-	0.15	South Jawhar	Dengachimet	Kashivali	255	N 19 51 53 E 073 11 11	forest land	Tribal
76	Thane	Jawhar						Gabbion Structure	--	--	1	-	0.16	South Jawhar	Dengachimet	Kashivali	255	N 19 51 53 E 073 11 12	forest land	Tribal
77	Thane	Jawhar						Gabbion Structure	--	--	1	-	0.15	South Jawhar	Dengachimet	Kashivali	255	N 19 51 53 E 073 11 14	forest land	Tribal
78	Thane	Jawhar						Gabbion Structure	--	--	1	-	0.16	South Jawhar	Dengachimet	Shiroshi	256	N 19.87299 E 073.154854	forest land	Tribal
79	Thane	Jawhar						Gabbion Structure	--	--	1	-	0.16	South Jawhar	Dengachimet	Shiroshi	256	N 19.873177 E 073.155157	forest land	Tribal

Sr. No.	Circle	Division	Name of the Project	Project ID	Final sanction	Project Area (ha)	Details/ Particulars of work as per stipulated condition			Total Area/Total Quantum of specified work mentioned in col. 11	Total No of sites with respect to column. 12	Rate per unit (Rs.)	Amount (Rs. Lakhs)	Details of Area to be treated						
							Condition no. in the sanction letter	Type of plantation	Year of plantation (i.e. PPO/FYO/ SYO/TYO etc.)					Range	Round	Beat	Compartment no.	Latlong	Wheter forest land or non - forest land	Tribal/remote area or non-tribal area
1	2	3	4	5	6	7	8	9	10	11	12	13	14	15	16	17	18	19	20	21
80	Thane	Jawhar	Diversion of 445.29 ha. (Previously submitted for 531.186 ha.) of forest land for construction of Deharji Medium Irrigation Project Tal. Vikramgad. District Thane, Maharashtra.	11670/ (40)	MoEF No. 8-10/2009.FC, dt. 2/19/2016	445.29	As Per stitupulated condition No.9	Gabbion Structure	--	--	1	-	0.14	South Jawhar	Dengachimet	Shiroshi	256	N 19.872889 E 073.15495	forest land	Tribal
81	Thane	Jawhar						Gabbion Structure	--	--	1	-	0.16	South Jawhar	Dengachimet	Shiroshi	257	N 19.851402 E 073.167223	forest land	Tribal
82	Thane	Jawhar						Gabbion Structure	--	--	1	-	0.17	South Jawhar	Dengachimet	Shiroshi	257	N 19.852312 E 073.164588	forest land	Tribal
83	Thane	Jawhar						Gabbion Structure	--	--	1	-	0.19	South Jawhar	Dengachimet	Shiroshi	257	N 19.855473 E 073.165217	forest land	Tribal
84	Thane	Jawhar						Gabbion Structure	--	--	1	-	0.18	South Jawhar	Pathardi	Wanganpada	262	N 19.82859 E 073.226264	forest land	Tribal
85	Thane	Jawhar						Gabbion Structure	--	--	1	-	0.17	South Jawhar	Pathardi	Wanganpada	262	N 19.829995 E 073.221989	forest land	Tribal
86	Thane	Jawhar						Gabbion Structure	--	--	1	-	0.17	South Jawhar	Pathardi	Wanganpada	262	N 19.836575 E 073.223335	forest land	Tribal
87	Thane	Jawhar						Gabbion Structure	--	--	1	-	0.19	South Jawhar	Pathardi	Wanganpada	262	N 19.837164 E 073.223639	forest land	Tribal
88	Thane	Jawhar						Gabbion Structure	--	--	1	-	0.18	South Jawhar	Jawhar	Kasatwadi	254	N 19. 896248 E 073. 195127	forest land	Tribal
89	Thane	Jawhar						Gabbion Structure	--	--	1	-	0.16	South Jawhar	Jawhar	Kasatwadi	254	N 19. 890443 E 073. 199001	forest land	Tribal
90	Thane	Jawhar						Gabbion Structure	--	--	1	-	0.17	South Jawhar	Jawhar	Kasatwadi	254	N 19. 887141 E 073. 20514	forest land	Tribal
91	Thane	Jawhar						Gabbion Structure	--	--	1	-	0.16	South Jawhar	Jawhar	Kasatwadi	254	N 19. 882839 E 073. 202658	forest land	Tribal
92	Thane	Jawhar						Gabbion Structure	--	--	1	-	0.17	South Jawhar	Jawhar	Kasatwadi	254	N 19. 883549 E 073. 200140	forest land	Tribal

Sr. No.	Circle	Division	Name of the Project	Project ID	Final sanction	Project Area (ha)	Details/ Particulars of work as per stipulated condition			Total Area/Total Quantum of specified work mentioned in col. 11	Total No of sites with respect to column. 12	Rate per unit (Rs.)	Amount (Rs. Lakhs)	Details of Area to be treated						
							Condition no. in the sanction letter	Type of plantation	Year of plantation (i.e. PPO/FYO/ SYO/TYO etc.)					Range	Round	Beat	Compartment no.	Latlong	Wheter forest land or non - forest land	Tribal/remote area or non-tribal area
1	2	3	4	5	6	7	8	9	10	11	12	13	14	15	16	17	18	19	20	21
93	Thane	Jawhar	Diversion of 445.29 ha. (Previously submitted for 531.186 ha.) of forest land for construction of Deharji Medium Irrigation Project Tal. Vikramgad. District Thane, Maharashtra.	11670/ (40)	MoEF No. 8-10/2009.FC, dt. 2/19/2016	445.29	As Per stitupulated condition No.9	Gabbion Structure	--	--	1	-	0.17	South Jawhar	Jawhar	Kadachimet	260	N 19. 865362 E 073. 205822	forest land	Tribal
94	Thane	Jawhar						Gabbion Structure	--	--	1	-	0.16	South Jawhar	Jawhar	Kadachimet	260	N 19. 862252 E 073. 207169	forest land	Tribal
95	Thane	Jawhar						Gabbion Structure	--	--	1	-	0.17	South Jawhar	Jawhar	Kadachimet	260	N 19. 866996 E 073. 209359	forest land	Tribal
96	Thane	Jawhar						Gabbion Structure	--	--	1	-	0.18	South Jawhar	Jawhar	Kadachimet	260	N 19. 861625 E 073. 205815	forest land	Tribal
97	Thane	Jawhar						Gabbion Structure	--	--	1	-	0.18	South Jawhar	Jawhar	Kadachimet	261	N 19. 858733 E 073. 208391	forest land	Tribal
98	Thane	Jawhar						Gabbion Structure	--	--	1	-	0.17	South Jawhar	Jawhar	Kadachimet	261	N 19. 855717 E 073. 211247	forest land	Tribal
99	Thane	Jawhar						Gabbion Structure	--	--	1	-	0.17	South Jawhar	Jawhar	Kadachimet	261	N 19. 850377 E 073. 213775	forest land	Tribal
100	Thane	Jawhar						Gabbion Structure	--	--	1	-	0.16	South Jawhar	Jawhar	Kadachimet	261	N 19. 848125 E 073. 213632	forest land	Tribal
			Total Gabbion								**60**	**0**	**10.00**							
101	Thane	Jawhar	Diversion of 445.29 ha. (Previously submitted for 531.186 ha.) of forest land for construction of Deharji Medium Irrigation Project Tal. Vikramgad. District Thane, Maharashtra.	11670/ (40)	MoEF No. 8-10/2009.FC, dt. 2/19/2016	445.29	As Per stitupulated condition No.9	Cement bandhara	-	1	1	-	14.19	Vikramgad	Sakhara	Walvanda	234	19°51'12.06"N 73°11'54.54"E	forest land	Tribal
102	Thane	Jawhar						Cement bandhara	-	1	1	-	15.28		Sakhara	Walvanda	234	19°50'25.61"N 73°12'0.66"E	forest land	Tribal
103	Thane	Jawhar						Cement bandhara	-	1	1	-	14.20		Sakhara	Walvanda	234	19°50'28.67"N 73°12'3.99"E	forest land	Tribal
104	Thane	Jawhar						Cement bandhara	-	1	1	-	15.18		Sakhara	Walvanda	234	19°50'50.19"N 73°12'22.50"E	forest land	Tribal
105	Thane	Jawhar						Cement bandhara	-	1	1	-	13.27		Sakhara	Walvanda	234	19°51'3.63"N 73°12'25.52"E	forest land	Tribal
106	Thane	Jawhar						Cement bandhara	-	1	1	-	14.34		Sakhara	Walvanda	234	19°51'13.44"N 73°12'27.12"E	forest land	Tribal

Sr. No.	Circle	Division	Name of the Project	Project ID	Final sanction	Project Area (ha)	Details/ Particulars of work as per stipulated condition			Total Area/Total Quantum of specified work mentioned in col. 11	Total No of sites with respect to column. 12	Rate per unit (Rs.)	Amount (Rs. Lakhs)	Details of Area to be treated						
							Condition no. in the sanction letter	Type of plantation	Year of plantation (i.e. PPO/FYO/ SYO/TYO etc.)					Range	Round	Beat	Compartment no.	Latlong	Wheter forest land or non - forest land	Tribal/remote area or non-tribal area
1	2	3	4	5	6	7	8	9	10	11	12	13	14	15	16	17	18	19	20	21
107	Thane	Jawhar	Diversion of 445.29 ha. (Previously submitted for 531.186 ha.) of forest land for construction of Deharji Medium Irrigation Project Tal. Vikramgad. District Thane, Maharashtra.	11670/ (40)	MoEF No. 8-10/2009.FC, dt. 2/19/2016	445.29	As Per stitupulated condition No.9	Cement bandhara	-	1	1	-	10.97		Sakhara	Walvanda	234	19°51'17.90"N 73°12'37.23"E	forest land	Tribal
108	Thane	Jawhar						Cement bandhara	-	1	1	-	15.30		Sakhara	Khuded	258	19°48'23.44"N 73°11'43.73"E	forest land	Tribal
109	Thane	Jawhar						Cement bandhara	-	1	1	-	12.04		Sakhara	Khuded	258	19°48'49.39"N 73°11'53.27"E	forest land	Tribal
110	Thane	Jawhar						Cement bandhara	-	1	1	-	16.48		Sakhara	Khuded	258	19°48'47.63"N 73°12'28.19"E	forest land	Tribal
111	Thane	Jawhar						Cement bandhara	-	1	1	-	16.18		Sakhara	Khuded	258	19°49'17.57"N 73°13'34.17"E	forest land	Tribal
112	Thane	Jawhar						Cement bandhara	-	1	1	-	16.55		Sakhara	Khuded	258	19°50'20.88"N 73°13'34.64"E	forest land	Tribal
113	Thane	Jawhar						Cement bandhara	-	1	1	-	15.52		Sakhara	Khuded	258	19°50'18.83"N 73°13'26.23"E	forest land	Tribal
114	Thane	Jawhar						Cement bandhara	-	1	1	-	14.77		Sakhara	Chouk	235	19°50'12.80"N 73°13'24.68"E	forest land	Tribal
115	Thane	Jawhar						Cement bandhara	-	1	1	-	10.59		Sakhara	Chouk	235	19°49'34.75"N 73°13'32.86"E	forest land	Tribal
116	Thane	Jawhar						Cement bandhara	-	1	1	-	12.48		Sakhara	Chouk	235	19°49'28.58"N 73°13'28.46"E	forest land	Tribal
117	Thane	Jawhar						Cement bandhara	-	1	1	-	11.18		Sakhara	Chouk	235	19°49'39.51"N 73°13'26.97"E	forest land	Tribal
118	Thane	Jawhar						Cement bandhara	-	1	1	-	14.19		Dengachimet	Kashivali	259	N 19 52 19 E 073 11 16	forest land	Tribal
119	Thane	Jawhar						Cement bandhara	-	1	1	-	15.28		Dengachimet	Kashivali	259	N 19 52 16 E 073 11 17	forest land	Tribal
120	Thane	Jawhar						Cement bandhara	-	1	1	-	14.20		Dengachimet	Kashivali	255	N 19 52 5 E 073 10 54	forest land	Tribal
121	Thane	Jawhar						Cement bandhara	-	1	1	-	15.18		Dengachimet	Kashivali	255	N 19 52 18 E 073 11 29	forest land	Tribal
122	Thane	Jawhar						Cement bandhara	-	1	1	-	13.27		Dengachimet	Kashivali	255	N 19 52 26 E 073 11 40	forest land	Tribal
123	Thane	Jawhar						Cement bandhara	-	1	1	-	14.34		Dengachimet	Shiroshi	256	N 19.872056 E 073.153407	forest land	Tribal
124	Thane	Jawhar						Cement bandhara	-	1	1	-	10.97		Dengachimet	Shiroshi	257	N 19.855349 E 073.163638	forest land	Tribal

Sr. No.	Circle	Division	Name of the Project	Project ID	Final sanction	Project Area (ha)	Details/ Particulars of work as per stipulated condition			Total Area/Total Quantum of specified work mentioned in col. 11	Total No of sites with respect to column. 12	Rate per unit (Rs.)	Amount (Rs. Lakhs)	Details of Area to be treated						
							Condition no. in the sanction letter	Type of plantation	Year of plantation (i.e. PPO/FYO/ SYO/TYO etc.)					Range	Round	Beat	Compartment no.	Latlong	Wheter forest land or non - forest land	Tribal/remote area or non-tribal area
1	2	3	4	5	6	7	8	9	10	11	12	13	14	15	16	17	18	19	20	21
125	Thane	Jawhar	Diversion of 445.29 ha. (Previously submitted for 531.186 ha.) of forest land for construction of Deharji Medium Irrigation Project Tal. Vikramgad. District Thane, Maharashtra.	11670/ (40)	MoEF No. 8-10/2009.FC, dt. 2/19/2016	445.29	As Per stitupulated condition No.9	Cement bandhara	-	1	1	-	15.30		Dengachimet	Shiroshi	257	N 19.854056 E 073.161337	forest land	Tribal
126	Thane	Jawhar						Cement bandhara	-	1	1	-	12.04		Dengachimet	Shiroshi	257	N 19.85159 E 073.164503	forest land	Tribal
127	Thane	Jawhar						Cement bandhara	-	1	1	-	16.48		Pathardi	Wanganpada	262	N 19.835866 E 073.223377	forest land	Tribal
128	Thane	Jawhar						Cement bandhara	-	1	1	-	16.18		Pathardi	Wanganpada	262	N 19.83483 E 073.223085	forest land	Tribal
129	Thane	Jawhar						Cement bandhara	-	1	1	-	16.55		Jawhar	Kasatwadi	254	N 19.887502 E 073.200122	forest land	Tribal
130	Thane	Jawhar						Cement bandhara	-	1	1	-	15.52		Jawhar	Kasatwadi	254	N 19.895574 E 073.197958	forest land	Tribal
131	Thane	Jawhar						Cement bandhara	-	1	1	-	14.77		Jawhar	Kadachimet	260	N 19.862099 E 073.206915	forest land	Tribal
132	Thane	Jawhar						Cement bandhara	-	1	1	-	10.59		Jawhar	Kadachimet	260	N 19.868094 E 073.201014	forest land	Tribal
133	Thane	Jawhar						Cement bandhara	-	1	1	-	12.48		Jawhar	Kadachimet	261	N 19.861701 E 073.206555	forest land	Tribal
134	Thane	Jawhar						Cement bandhara	-	1	1	-	11.18		Jawhar	Kadachimet	261	N 19.849834 E 073.213135	forest land	Tribal
			Total CNB							**34**	**34**	**0**	**477.01**							
135	Thane	Jawhar	Diversion of 445.29 ha. (Previously submitted for 531.186 ha.) of forest land for construction of Deharji Medium Irrigation Project Tal. Vikramgad. District Thane, Maharashtra.	11670/ (40)	MoEF No. 8-10/2009.FC, 42419	445.29	As Per stitupulated condition No.9	Looscbolder Structure		15	15	-	3.38	Vikramgad	Sakhara	Walvanda	234	19°49'32.34"N 73°11'27.81"E	forest land	Tribal
136	Thane	Jawhar						Looscbolder Structure						Vikramgad	Sakhara	Walvanda	234	19°49'29.08"N 73°11'27.55"E	forest land	Tribal
137	Thane	Jawhar						Looscbolder Structure						Vikramgad	Sakhara	Walvanda	234	19°49'29.23"N 73°11'26.12"E	forest land	Tribal
138	Thane	Jawhar						Looscbolder Structure						Vikramgad	Sakhara	Walvanda	234	19°49'26.55"N 73°11'25.51"E	forest land	Tribal
139	Thane	Jawhar						Looscbolder Structure						Vikramgad	Sakhara	Walvanda	234	19°49'25.11"N 73°11'25.13"E	forest land	Tribal
140	Thane	Jawhar						Looscbolder Structure						Vikramgad	Sakhara	Walvanda	234	19°49'22.57"N 73°11'25.02"E	forest land	Tribal
141	Thane	Jawhar						Looscbolder Structure						Vikramgad	Sakhara	Walvanda	234	19°49'21.64"N 73°11'25.25"E	forest land	Tribal

Sr. No.	Circle	Division	Name of the Project	Project ID	Final sanction	Project Area (ha)	Details/ Particulars of work as per stipulated condition			Total Area/Total Quantum of specified work mentioned in col. 11	Total No of sites with respect to column. 12	Rate per unit (Rs.)	Amount (Rs. Lakhs)	Details of Area to be treated						
							Condition no. in the sanction letter	Type of plantation	Year of plantation (i.e. PPO/FYO/ SYO/TYO etc.)					Range	Round	Beat	Compartment no.	Latlong	Wheter forest land or non - forest land	Tribal/remote area or non-tribal area
1	2	3	4	5	6	7	8	9	10	11	12	13	14	15	16	17	18	19	20	21
142	Thane	Jawhar	Diversion of 445.29 ha. (Previously submitted for 531.186 ha.) of forest land for construction of Deharji Medium Irrigation Project Tal. Vikramgad. District Thane, Maharashtra.	11670/ (40)	MoEF No. 8-10/2009.FC, 42419	445.29	As Per stitupulated condition No.9	Looscbolder Structure						Vikramgad	Sakhara	Walvanda	234	19°49'19.31"N 73°11'25.97"E	forest land	Tribal
143	Thane	Jawhar						Looscbolder Structure						Vikramgad	Sakhara	Walvanda	234	19°49'16.23"N 73°11'25.17"E	forest land	Tribal
144	Thane	Jawhar						Looscbolder Structure						Vikramgad	Sakhara	Walvanda	234	19°49'37.57"N 73°11'42.51"E	forest land	Tribal
145	Thane	Jawhar						Looscbolder Structure						Vikramgad	Sakhara	Walvanda	234	19°49'35.43"N 73°11'43.30"E	forest land	Tribal
146	Thane	Jawhar						Looscbolder Structure						Vikramgad	Sakhara	Walvanda	234	19°49'34.37"N 73°11'43.52"E	forest land	Tribal
147	Thane	Jawhar						Looscbolder Structure						Vikramgad	Sakhara	Walvanda	234	19°49'32.97"N 73°11'43.43"E	forest land	Tribal
148	Thane	Jawhar						Looscbolder Structure						Vikramgad	Sakhara	Walvanda	234	19°49'18.98"N 73°11'55.65"E	forest land	Tribal
149	Thane	Jawhar						Looscbolder Structure						Vikramgad	Sakhara	Walvanda	234	19°49'18.60"N 73°11'54.96"E	forest land	Tribal
150	Thane	Jawhar						Looscbolder Structure		39	39	-	8.80	Vikramgad	Sakhara	Chouk	235	19°49'18.60"N 73°11'54.45"E	forest land	Tribal
151	Thane	Jawhar						Looscbolder Structure						Vikramgad	Sakhara	Chouk	235	19°49'12.71"N 73°12'9.28"E	forest land	Tribal
152	Thane	Jawhar						Looscbolder Structure						Vikramgad	Sakhara	Chouk	235	19°49'12.56"N 73°12'8.38"E	forest land	Tribal
153	Thane	Jawhar						Looscbolder Structure						Vikramgad	Sakhara	Chouk	235	19°49'12.25"N 73°12'7.47"E	forest land	Tribal
154	Thane	Jawhar						Looscbolder Structure						Vikramgad	Sakhara	Chouk	235	19°49'11.72"N 73°12'6.25"E	forest land	Tribal
155	Thane	Jawhar						Looscbolder Structure						Vikramgad	Sakhara	Chouk	235	19°49'11.08"N 73°12'5.27"E	forest land	Tribal
156	Thane	Jawhar						Looscbolder Structure						Vikramgad	Sakhara	Chouk	235	19°48'54.57"N 73°11'53.71"E	forest land	Tribal
157	Thane	Jawhar						Looscbolder Structure						Vikramgad	Sakhara	Chouk	235	19°48'56.14"N 73°11'54.15"E	forest land	Tribal
158	Thane	Jawhar						Looscbolder Structure						Vikramgad	Sakhara	Chouk	235	19°48'57.97"N 73°11'54.86"E	forest land	Tribal
159	Thane	Jawhar						Looscbolder Structure						Vikramgad	Sakhara	Chouk	235	19°49'5.01"N 73°12'13.93"E	forest land	Tribal

Sr. No.	Circle	Division	Name of the Project	Project ID	Final sanction	Project Area (ha)	Details/ Particulars of work as per stipulated condition			Total Area/Total Quantum of specified work mentioned in col. 11	Total No of sites with respect to column. 12	Rate per unit (Rs.)	Amount (Rs. Lakhs)	Details of Area to be treated						
							Condition no. in the sanction letter	Type of plantation	Year of plantation (i.e. PPO/FYO/ SYO/TYO etc.)					Range	Round	Beat	Compartment no.	Latlong	Wheter forest land or non - forest land	Tribal/remote area or non-tribal area
1	2	3	4	5	6	7	8	9	10	11	12	13	14	15	16	17	18	19	20	21
160	Thane	Jawhar	Diversion of 445.29 ha. (Previously submitted for 531.186 ha.) of forest land for construction of Deharji Medium Irrigation Project Tal. Vikramgad. District Thane, Maharashtra.	11670/ (40)	MoEF No. 8-10/2009.FC, 42419	445.29	As Per stitupulated condition No.9	Looscbolder Structure						Vikramgad	Sakhara	Chouk	235	19°49'4.44"N 73°12'13.77"E	forest land	Tribal
161	Thane	Jawhar						Looscbolder Structure						Vikramgad	Sakhara	Chouk	235	19°49'4.01"N 73°12'13.36"E	forest land	Tribal
162	Thane	Jawhar						Looscbolder Structure						Vikramgad	Sakhara	Chouk	235	19°49'3.30"N 73°12'12.95"E	forest land	Tribal
163	Thane	Jawhar						Looscbolder Structure						Vikramgad	Sakhara	Chouk	235	19°49'2.39"N 73°12'13.53"E	forest land	Tribal
164	Thane	Jawhar						Looscbolder Structure						Vikramgad	Sakhara	Chouk	235	19°49'0.38"N 73°12'24.26"E	forest land	Tribal
165	Thane	Jawhar						Looscbolder Structure						Vikramgad	Sakhara	Chouk	235	19°49'0.36"N 73°12'23.32"E	forest land	Tribal
166	Thane	Jawhar						Looscbolder Structure						Vikramgad	Sakhara	Chouk	235	19°49'0.05"N 73°12'22.08"E	forest land	Tribal
167	Thane	Jawhar						Looscbolder Structure						Vikramgad	Sakhara	Chouk	235	19°48'51.09"N 73°12'21.88"E	forest land	Tribal
168	Thane	Jawhar						Looscbolder Structure						Vikramgad	Sakhara	Chouk	235	19°48'49.93"N 73°12'21.80"E	forest land	Tribal
169	Thane	Jawhar						Looscbolder Structure						Vikramgad	Sakhara	Chouk	235	19°48'41.85"N 73°12'29.21"E	forest land	Tribal
170	Thane	Jawhar						Looscbolder Structure						Vikramgad	Sakhara	Chouk	235	19°48'40.74"N 73°12'28.70"E	forest land	Tribal
171	Thane	Jawhar						Looscbolder Structure						Vikramgad	Sakhara	Chouk	235	19°48'31.56"N 73°12'28.61"E	forest land	Tribal
172	Thane	Jawhar						Looscbolder Structure						Vikramgad	Sakhara	Chouk	235	19°48'30.19"N 73°12'28.14"E	forest land	Tribal
173	Thane	Jawhar						Looscbolder Structure						Vikramgad	Sakhara	Chouk	235	19°48'29.08"N 73°12'27.51"E	forest land	Tribal
174	Thane	Jawhar						Looscbolder Structure						Vikramgad	Sakhara	Chouk	235	19°48'29.32"N 73°12'31.47"E	forest land	Tribal
175	Thane	Jawhar						Looscbolder Structure						Vikramgad	Sakhara	Chouk	235	19°47'42.62"N 73°12'48.41"E	forest land	Tribal
176	Thane	Jawhar						Looscbolder Structure						Vikramgad	Sakhara	Chouk	235	19°47'44.14"N 73°12'49.07"E	forest land	Tribal
177	Thane	Jawhar						Looscbolder Structure						Vikramgad	Sakhara	Chouk	235	19°47'46.00"N 73°12'48.86"E	forest land	Tribal

Sr. No.	Circle	Division	Name of the Project	Project ID	Final sanction	Project Area (ha)	Details/ Particulars of work as per stipulated condition			Total Area/Total Quantum of specified work mentioned in col. 11	Total No of sites with respect to column. 12	Rate per unit (Rs.)	Amount (Rs. Lakhs)	Details of Area to be treated						
							Condition no. in the sanction letter	Type of plantation	Year of plantation (i.e. PPO/FYO/ SYO/TYO etc.)					Range	Round	Beat	Compartment no.	Latlong	Wheter forest land or non - forest land	Tribal/remote area or non-tribal area
1	2	3	4	5	6	7	8	9	10	11	12	13	14	15	16	17	18	19	20	21
178	Thane	Jawhar	Diversion of 445.29 ha. (Previously submitted for 531.186 ha.) of forest land for construction of Deharji Medium Irrigation Project Tal. Vikramgad. District Thane, Maharashtra.	11670/ (40)	MoEF No. 8-10/2009.FC, 42419	445.29	As Per stitupulated condition No.9	Looscbolder Structure						Vikramgad	Sakhara	Chouk	235	19°47'47.10"N 73°12'48.93"E	forest land	Tribal
179	Thane	Jawhar						Looscbolder Structure						Vikramgad	Sakhara	Chouk	235	19°47'49.69"N 73°12'48.49"E	forest land	Tribal
180	Thane	Jawhar						Looscbolder Structure						Vikramgad	Sakhara	Chouk	235	19°47'51.09"N 73°12'49.51"E	forest land	Tribal
181	Thane	Jawhar						Looscbolder Structure						Vikramgad	Sakhara	Chouk	235	73°12'49.51"E 73°12'50.15"E	forest land	Tribal
182	Thane	Jawhar						Looscbolder Structure						Vikramgad	Sakhara	Chouk	235	19°47'53.12"N 73°12'50.64"E	forest land	Tribal
183	Thane	Jawhar						Looscbolder Structure						Vikramgad	Sakhara	Chouk	235	19°48'11.18"N 73°13'6.40"E	forest land	Tribal
184	Thane	Jawhar						Looscbolder Structure						Vikramgad	Sakhara	Chouk	235	19°48'13.72"N 73°13'5.26"E	forest land	Tribal
185	Thane	Jawhar						Looscbolder Structure						Vikramgad	Sakhara	Chouk	235	19°49'37.16"N 73°11'4.86"E	forest land	Tribal
186	Thane	Jawhar						Looscbolder Structure						Vikramgad	Sakhara	Chouk	235	19°49'35.90"N 73°11'4.14"E	forest land	Tribal
187	Thane	Jawhar						Looscbolder Structure						Vikramgad	Sakhara	Chouk	235	19°49'34.79"N 73°11'3.84"E	forest land	Tribal
188	Thane	Jawhar						Looscbolder Structure						Vikramgad	Sakhara	Chouk	235	19°49'33.69"N 73°11'3.57"E	forest land	Tribal
189	Thane	Jawhar						Looscbolder Structure		145	145	-	32.71	Vikramgad	Sakhara	Walvanda	234	19°49'33.18"N 73°11'3.30"E	forest land	Tribal
190	Thane	Jawhar						Looscbolder Structure						Vikramgad	Sakhara	Walvanda	234	19°49'31.93"N 73°11'3.22"E	forest land	Tribal
191	Thane	Jawhar						Looscbolder Structure						Vikramgad	Sakhara	Walvanda	234	19°49'31.11"N 73°11'3.18"E	forest land	Tribal
192	Thane	Jawhar						Looscbolder Structure						Vikramgad	Sakhara	Walvanda	234	19°49'31.63"N 73°11'10.28"E	forest land	Tribal
193	Thane	Jawhar						Looscbolder Structure						Vikramgad	Sakhara	Walvanda	234	19°49'31.20"N 73°11'9.38"E	forest land	Tribal
194	Thane	Jawhar						Looscbolder Structure						Vikramgad	Sakhara	Walvanda	234	19°49'30.84"N 73°11'9.00"E	forest land	Tribal
195	Thane	Jawhar						Looscbolder Structure						Vikramgad	Sakhara	Walvanda	234	19°49'30.71"N 73°11'7.38"E	forest land	Tribal

Sr. No.	Circle	Division	Name of the Project	Project ID	Final sanction	Project Area (ha)	Details/ Particulars of work as per stipulated condition			Total Area/Total Quantum of specified work mentioned in col. 11	Total No of sites with respect to column. 12	Rate per unit (Rs.)	Amount (Rs. Lakhs)	Details of Area to be treated						
							Condition no. in the sanction letter	Type of plantation	Year of plantation (i.e. PPO/FYO/ SYO/TYO etc.)					Range	Round	Beat	Compartment no.	Latlong	Wheter forest land or non - forest land	Tribal/remote area or non-tribal area
1	2	3	4	5	6	7	8	9	10	11	12	13	14	15	16	17	18	19	20	21
196	Thane	Jawhar	Diversion of 445.29 ha. (Previously submitted for 531.186 ha.) of forest land for construction of Deharji Medium Irrigation Project Tal. Vikramgad. District Thane, Maharashtra.	11670/ (40)	MoEF No. 8-10/2009.FC, 42419	445.29	As Per stitupulated condition No.9	Looscbolder Structure						Vikramgad	Sakhara	Walvanda	234	19°49'24.56"N 73°11'4.74"E	forest land	Tribal
197	Thane	Jawhar						Looscbolder Structure						Vikramgad	Sakhara	Walvanda	234	19°49'24.86"N 73°11'3.58"E	forest land	Tribal
198	Thane	Jawhar						Looscbolder Structure						Vikramgad	Sakhara	Walvanda	234	19°49'25.52"N 73°11'2.68"E	forest land	Tribal
199	Thane	Jawhar						Looscbolder Structure						Vikramgad	Sakhara	Walvanda	234	19°49'25.86"N 73°11'1.71"E	forest land	Tribal
200	Thane	Jawhar						Looscbolder Structure						Vikramgad	Sakhara	Walvanda	234	19°49'19.66"N 73°11'4.01"E	forest land	Tribal
201	Thane	Jawhar						Looscbolder Structure						Vikramgad	Sakhara	Walvanda	234	19°49'19.15"N 73°11'2.76"E	forest land	Tribal
202	Thane	Jawhar						Looscbolder Structure						Vikramgad	Sakhara	Walvanda	234	19°49'18.12"N 73°11'1.85"E	forest land	Tribal
203	Thane	Jawhar						Looscbolder Structure						Vikramgad	Sakhara	Walvanda	234	19°49'17.59"N 73°11'0.89"E	forest land	Tribal
204	Thane	Jawhar						Looscbolder Structure						Vikramgad	Sakhara	Walvanda	234	19°49'16.74"N 73°10'59.94"E	forest land	Tribal
205	Thane	Jawhar						Looscbolder Structure						Vikramgad	Sakhara	Walvanda	234	19°49'16.09"N 73°10'59.03"E	forest land	Tribal
206	Thane	Jawhar						Looscbolder Structure						Vikramgad	Sakhara	Walvanda	234	19°49'16.08"N 73°10'57.44"E	forest land	Tribal
207	Thane	Jawhar						Looscbolder Structure						Vikramgad	Sakhara	Walvanda	234	19°49'15.95"N 73°10'56.29"E	forest land	Tribal
208	Thane	Jawhar						Looscbolder Structure						Vikramgad	Sakhara	Walvanda	234	19°49'14.60"N 73°10'55.46"E	forest land	Tribal
209	Thane	Jawhar						Looscbolder Structure						Vikramgad	Sakhara	Walvanda	234	19°49'14.29"N 73°10'54.65"E	forest land	Tribal
210	Thane	Jawhar						Looscbolder Structure						Vikramgad	Sakhara	Walvanda	234	19°49'5.32"N 73°10'56.44"E	forest land	Tribal
211	Thane	Jawhar						Looscbolder Structure						Vikramgad	Sakhara	Walvanda	234	19°49'5.85"N 73°10'55.55"E	forest land	Tribal
212	Thane	Jawhar						Looscbolder Structure						Vikramgad	Sakhara	Walvanda	234	19°49'5.74"N 73°10'54.33"E	forest land	Tribal
213	Thane	Jawhar						Looscbolder Structure						Vikramgad	Sakhara	Walvanda	234	19°49'7.00"N 73°10'51.85"E	forest land	Tribal

Sr. No.	Circle	Division	Name of the Project	Project ID	Final sanction	Project Area (ha)	Details/ Particulars of work as per stipulated condition			Total Area/Total Quantum of specified work mentioned in col. 11	Total No of sites with respect to column. 12	Rate per unit (Rs.)	Amount (Rs. Lakhs)	Details of Area to be treated						
							Condition no. in the sanction letter	Type of plantation	Year of plantation (i.e. PPO/FYO/ SYO/TYO etc.)					Range	Round	Beat	Compartment no.	Latlong	Wheter forest land or non - forest land	Tribal/remote area or non-tribal area
1	2	3	4	5	6	7	8	9	10	11	12	13	14	15	16	17	18	19	20	21
214	Thane	Jawhar	Diversion of 445.29 ha. (Previously submitted for 531.186 ha.) of forest land for construction of Deharji Medium Irrigation Project Tal. Vikramgad. District Thane, Maharashtra.	11670/ (40)	MoEF No. 8-10/2009.FC, 42419	445.29	As Per stitupulated condition No.9	Looscbolder Structure						Vikramgad	Sakhara	Walvanda	234	19°48'57.90"N 73°10'55.13"E	forest land	Tribal
215	Thane	Jawhar						Looscbolder Structure						Vikramgad	Sakhara	Walvanda	234	19°48'57.69"N 73°10'55.25"E	forest land	Tribal
216	Thane	Jawhar						Looscbolder Structure						Vikramgad	Sakhara	Walvanda	234	19°48'57.14"N 73°10'55.63"E	forest land	Tribal
217	Thane	Jawhar						Looscbolder Structure						Vikramgad	Sakhara	Walvanda	234	19°48'56.84"N 73°10'56.00"E	forest land	Tribal
218	Thane	Jawhar						Looscbolder Structure						Vikramgad	Sakhara	Walvanda	234	19°48'56.22"N 73°10'56.23"E	forest land	Tribal
219	Thane	Jawhar						Looscbolder Structure						Vikramgad	Sakhara	Walvanda	234	19°48'55.64"N 73°10'56.92"E	forest land	Tribal
220	Thane	Jawhar						Looscbolder Structure						Vikramgad	Sakhara	Walvanda	234	19°48'54.29"N 73°10'57.03"E	forest land	Tribal
221	Thane	Jawhar						Looscbolder Structure						Vikramgad	Sakhara	Walvanda	234	19°49'1.29"N 73°11'0.91"E	forest land	Tribal
222	Thane	Jawhar						Looscbolder Structure						Vikramgad	Sakhara	Walvanda	234	19°48'59.08"N 73°11'1.38"E	forest land	Tribal
223	Thane	Jawhar						Looscbolder Structure						Vikramgad	Sakhara	Walvanda	234	19°48'56.86"N 73°11'2.91"E	forest land	Tribal
224	Thane	Jawhar						Looscbolder Structure						Vikramgad	Sakhara	Walvanda	234	19°48'54.04"N 73°11'4.10"E	forest land	Tribal
225	Thane	Jawhar						Looscbolder Structure						Vikramgad	Sakhara	Walvanda	234	19°49'7.87"N 73°11'14.37"E	forest land	Tribal
226	Thane	Jawhar						Looscbolder Structure						Vikramgad	Sakhara	Walvanda	234	19°49'10.01"N 73°11'14.07"E	forest land	Tribal
227	Thane	Jawhar						Looscbolder Structure						Vikramgad	Sakhara	Walvanda	234	19°49'11.90"N 73°11'14.29"E	forest land	Tribal
228	Thane	Jawhar						Looscbolder Structure						Vikramgad	Sakhara	Walvanda	234	19°49'12.83"N 73°11'14.24"E	forest land	Tribal
229	Thane	Jawhar						Looscbolder Structure						Vikramgad	Sakhara	Walvanda	234	19°49'21.14"N 73°11'19.35"E	forest land	Tribal
230	Thane	Jawhar						Looscbolder Structure						Vikramgad	Sakhara	Walvanda	234	19°49'19.93"N 73°11'19.15"E	forest land	Tribal
231	Thane	Jawhar						Looscbolder Structure						Vikramgad	Sakhara	Walvanda	234	19°49'19.38"N 73°11'18.59"E	forest land	Tribal

Sr. No.	Circle	Division	Name of the Project	Project ID	Final sanction	Project Area (ha)	Details/ Particulars of work as per stipulated condition			Total Area/Total Quantum of specified work mentioned in col. 11	Total No of sites with respect to column. 12	Rate per unit (Rs.)	Amount (Rs. Lakhs)	Details of Area to be treated						
							Condition no. in the sanction letter	Type of plantation	Year of plantation (i.e. PPO/FYO/ SYO/TYO etc.)					Range	Round	Beat	Compartment no.	Latlong	Wheter forest land or non - forest land	Tribal/remote area or non-tribal area
1	2	3	4	5	6	7	8	9	10	11	12	13	14	15	16	17	18	19	20	21
232	Thane	Jawhar	Diversion of 445.29 ha. (Previously submitted for 531.186 ha.) of forest land for construction of Deharji Medium Irrigation Project Tal. Vikramgad. District Thane, Maharashtra.	11670/ (40)	MoEF No. 8-10/2009.FC, 42419	445.29	As Per stitupulated condition No.9	Looscbolder Structure						Vikramgad	Sakhara	Walvanda	234	19°49'21.94"N 73°11'24.99"E	forest land	Tribal
233	Thane	Jawhar						Looscbolder Structure						Vikramgad	Sakhara	Walvanda	234	19°49'21.10"N 73°11'25.42"E	forest land	Tribal
234	Thane	Jawhar						Looscbolder Structure						Vikramgad	Sakhara	Walvanda	234	19°49'20.92"N 73°11'25.58"E	forest land	Tribal
235	Thane	Jawhar						Looscbolder Structure						Vikramgad	Sakhara	Walvanda	234	19°49'20.57"N 73°11'25.72"E	forest land	Tribal
236	Thane	Jawhar						Looscbolder Structure						Vikramgad	Sakhara	Walvanda	234	19°49'20.01"N 73°11'25.96"E	forest land	Tribal
237	Thane	Jawhar						Looscbolder Structure						Vikramgad	Sakhara	Walvanda	234	19°49'19.43"N 73°11'26.05"E	forest land	Tribal
238	Thane	Jawhar						Looscbolder Structure						Vikramgad	Sakhara	Walvanda	234	19°49'18.67"N 73°11'26.37"E	forest land	Tribal
239	Thane	Jawhar						Looscbolder Structure						Vikramgad	Sakhara	Walvanda	234	19°49'18.57"N 73°11'26.51"E	forest land	Tribal
240	Thane	Jawhar						Looscbolder Structure						Vikramgad	Sakhara	Walvanda	234	19°49'32.31"N 73°11'27.86"E	forest land	Tribal
241	Thane	Jawhar						Looscbolder Structure						Vikramgad	Sakhara	Walvanda	234	19°49'30.95"N 73°11'27.63"E	forest land	Tribal
242	Thane	Jawhar						Looscbolder Structure						Vikramgad	Sakhara	Walvanda	234	19°49'30.59"N 73°11'26.92"E	forest land	Tribal
243	Thane	Jawhar						Looscbolder Structure						Vikramgad	Sakhara	Walvanda	234	19°49'29.60"N 73°11'26.69"E	forest land	Tribal
244	Thane	Jawhar						Looscbolder Structure						Vikramgad	Sakhara	Walvanda	234	19°49'29.13"N 73°11'26.13"E	forest land	Tribal
245	Thane	Jawhar						Looscbolder Structure						Vikramgad	Sakhara	Walvanda	234	19°49'28.75"N 73°11'25.68"E	forest land	Tribal
246	Thane	Jawhar						Looscbolder Structure						Vikramgad	Sakhara	Walvanda	234	19°49'28.34"N 73°11'25.39"E	forest land	Tribal
247	Thane	Jawhar						Looscbolder Structure						Vikramgad	Sakhara	Walvanda	234	19°49'32.56"N 73°11'21.52"E	forest land	Tribal
248	Thane	Jawhar						Looscbolder Structure						Vikramgad	Sakhara	Walvanda	234	19°49'31.94"N 73°11'21.50"E	forest land	Tribal
249	Thane	Jawhar						Looscbolder Structure						Vikramgad	Sakhara	Walvanda	234	19°49'31.19"N 73°11'21.27"E	forest land	Tribal

Sr. No.	Circle	Division	Name of the Project	Project ID	Final sanction	Project Area (ha)	Details/ Particulars of work as per stipulated condition			Total Area/Total Quantum of specified work mentioned in col. 11	Total No of sites with respect to column. 12	Rate per unit (Rs.)	Amount (Rs. Lakhs)	Details of Area to be treated						
							Condition no. in the sanction letter	Type of plantation	Year of plantation (i.e. PPO/FYO/ SYO/TYO etc.)					Range	Round	Beat	Compartment no.	Latlong	Wheter forest land or non - forest land	Tribal/remote area or non-tribal area
1	2	3	4	5	6	7	8	9	10	11	12	13	14	15	16	17	18	19	20	21
250	Thane	Jawhar	Diversion of 445.29 ha. (Previously submitted for 531.186 ha.) of forest land for construction of Deharji Medium Irrigation Project Tal. Vikramgad. District Thane, Maharashtra.	11670/ (40)	MoEF No. 8-10/2009.FC, 42419	445.29	As Per stitupulated condition No.9	Looscbolder Structure						Vikramgad	Sakhara	Walvanda	234	19°49'46.44"N 73°11'25.05"E	forest land	Tribal
251	Thane	Jawhar						Looscbolder Structure						Vikramgad	Sakhara	Walvanda	234	19°49'46.14"N 73°11'24.46"E	forest land	Tribal
252	Thane	Jawhar						Looscbolder Structure						Vikramgad	Sakhara	Walvanda	234	19°49'45.35"N 73°11'24.20"E	forest land	Tribal
253	Thane	Jawhar						Looscbolder Structure						Vikramgad	Sakhara	Walvanda	234	19°49'44.24"N 73°11'24.62"E	forest land	Tribal
254	Thane	Jawhar						Looscbolder Structure						Vikramgad	Sakhara	Walvanda	234	19°49'43.93"N 73°11'24.33"E	forest land	Tribal
255	Thane	Jawhar						Looscbolder Structure						Vikramgad	Sakhara	Walvanda	234	19°49'43.68"N 73°11'25.63"E	forest land	Tribal
256	Thane	Jawhar						Looscbolder Structure						Vikramgad	Sakhara	Walvanda	234	19°49'43.53"N 73°11'24.91"E	forest land	Tribal
257	Thane	Jawhar						Looscbolder Structure						Vikramgad	Sakhara	Walvanda	234	19°49'43.20"N 73°11'24.33"E	forest land	Tribal
258	Thane	Jawhar						Looscbolder Structure						Vikramgad	Sakhara	Walvanda	234	19°49'42.14"N 73°11'23.72"E	forest land	Tribal
259	Thane	Jawhar						Looscbolder Structure						Vikramgad	Sakhara	Walvanda	234	19°49'47.07"N 73°11'20.82"E	forest land	Tribal
260	Thane	Jawhar						Looscbolder Structure						Vikramgad	Sakhara	Walvanda	234	19°49'46.11"N 73°11'21.04"E	forest land	Tribal
261	Thane	Jawhar						Looscbolder Structure						Vikramgad	Sakhara	Walvanda	234	19°49'44.97"N 73°11'21.42"E	forest land	Tribal
262	Thane	Jawhar						Looscbolder Structure						Vikramgad	Sakhara	Walvanda	234	19°49'47.01"N 73°11'17.71"E	forest land	Tribal
263	Thane	Jawhar						Looscbolder Structure						Vikramgad	Sakhara	Walvanda	234	19°49'46.77"N 73°11'17.52"E	forest land	Tribal
264	Thane	Jawhar						Looscbolder Structure						Vikramgad	Sakhara	Walvanda	234	19°49'46.16"N 73°11'17.48"E	forest land	Tribal
265	Thane	Jawhar						Looscbolder Structure						Vikramgad	Sakhara	Walvanda	234	19°49'45.84"N 73°11'17.25"E	forest land	Tribal
266	Thane	Jawhar						Looscbolder Structure						Vikramgad	Sakhara	Walvanda	234	19°49'45.55"N 73°11'16.73"E	forest land	Tribal
267	Thane	Jawhar						Looscbolder Structure						Vikramgad	Sakhara	Walvanda	234	19°49'50.43"N 73°11'17.74"E	forest land	Tribal

Sr. No.	Circle	Division	Name of the Project	Project ID	Final sanction	Project Area (ha)	Details/ Particulars of work as per stipulated condition			Total Area/Total Quantum of specified work mentioned in col. 11	Total No of sites with respect to column. 12	Rate per unit (Rs.)	Amount (Rs. Lakhs)	Details of Area to be treated						
							Condition no. in the sanction letter	Type of plantation	Year of plantation (i.e. PPO/FYO/ SYO/TYO etc.)					Range	Round	Beat	Compartment no.	Latlong	Wheter forest land or non - forest land	Tribal/remote area or non-tribal area
1	2	3	4	5	6	7	8	9	10	11	12	13	14	15	16	17	18	19	20	21
268	Thane	Jawhar	Diversion of 445.29 ha. (Previously submitted for 531.186 ha.) of forest land for construction of Deharji Medium Irrigation Project Tal. Vikramgad. District Thane, Maharashtra.	11670/ (40)	MoEF No. 8-10/2009.FC, 42419	445.29	As Per stitupulated condition No.9	Looscbolder Structure						Vikramgad	Sakhara	Walvanda	234	19°49'50.35"N 73°11'17.22"E	forest land	Tribal
269	Thane	Jawhar						Looscbolder Structure						Vikramgad	Sakhara	Walvanda	234	19°49'49.99"N 73°11'16.67"E	forest land	Tribal
270	Thane	Jawhar						Looscbolder Structure						Vikramgad	Sakhara	Walvanda	234	19°49'49.53"N 73°11'16.34"E	forest land	Tribal
271	Thane	Jawhar						Looscbolder Structure						Vikramgad	Sakhara	Walvanda	234	19°49'49.69"N 73°11'15.85"E	forest land	Tribal
272	Thane	Jawhar						Looscbolder Structure						Vikramgad	Sakhara	Walvanda	234	19°49'49.48"N 73°11'15.52"E	forest land	Tribal
273	Thane	Jawhar						Looscbolder Structure						Vikramgad	Sakhara	Walvanda	234	19°49'49.15"N 73°11'15.18"E	forest land	Tribal
274	Thane	Jawhar						Looscbolder Structure						Vikramgad	Sakhara	Walvanda	234	19°49'55.67"N 73°11'17.13"E	forest land	Tribal
275	Thane	Jawhar						Looscbolder Structure						Vikramgad	Sakhara	Walvanda	234	19°49'55.94"N 73°11'16.57"E	forest land	Tribal
276	Thane	Jawhar						Looscbolder Structure						Vikramgad	Sakhara	Walvanda	234	19°49'55.86"N 73°11'16.18"E	forest land	Tribal
277	Thane	Jawhar						Looscbolder Structure						Vikramgad	Sakhara	Walvanda	234	19°49'55.59"N 73°11'15.83"E	forest land	Tribal
278	Thane	Jawhar						Looscbolder Structure						Vikramgad	Sakhara	Walvanda	234	19°49'56.04"N 73°11'15.31"E	forest land	Tribal
279	Thane	Jawhar						Looscbolder Structure						Vikramgad	Sakhara	Walvanda	234	19°49'57.29"N 73°11'15.36"E	forest land	Tribal
280	Thane	Jawhar						Looscbolder Structure						Vikramgad	Sakhara	Walvanda	234	19°49'57.89"N 73°11'14.73"E	forest land	Tribal
281	Thane	Jawhar						Looscbolder Structure						Vikramgad	Sakhara	Walvanda	234	19°49'58.14"N 73°11'14.03"E	forest land	Tribal
282	Thane	Jawhar						Looscbolder Structure						Vikramgad	Sakhara	Walvanda	234	19°50'3.74"N 73°11'20.51"E	forest land	Tribal
283	Thane	Jawhar						Looscbolder Structure						Vikramgad	Sakhara	Walvanda	234	19°50'3.16"N 73°11'20.03"E	forest land	Tribal
284	Thane	Jawhar						Looscbolder Structure						Vikramgad	Sakhara	Walvanda	234	19°50'3.47"N 73°11'18.74"E	forest land	Tribal
285	Thane	Jawhar						Looscbolder Structure						Vikramgad	Sakhara	Walvanda	234	19°50'3.64"N 73°11'18.03"E	forest land	Tribal

Sr. No.	Circle	Division	Name of the Project	Project ID	Final sanction	Project Area (ha)	Details/ Particulars of work as per stipulated condition			Total Area/Total Quantum of specified work mentioned in col. 11	Total No of sites with respect to column. 12	Rate per unit (Rs.)	Amount (Rs. Lakhs)	Details of Area to be treated						
							Condition no. in the sanction letter	Type of plantation	Year of plantation (i.e. PPO/FYO/ SYO/TYO etc.)					Range	Round	Beat	Compartment no.	Latlong	Wheter forest land or non - forest land	Tribal/remote area or non-tribal area
1	2	3	4	5	6	7	8	9	10	11	12	13	14	15	16	17	18	19	20	21
286	Thane	Jawhar	Diversion of 445.29 ha. (Previously submitted for 531.186 ha.) of forest land for construction of Deharji Medium Irrigation Project Tal. Vikramgad. District Thane, Maharashtra.	11670/ (40)	MoEF No. 8-10/2009.FC, 42419	445.29	As Per stitupulated condition No.9	Looscbolder Structure						Vikramgad	Sakhara	Walvanda	234	19°50'3.73"N 73°11'17.38"E	forest land	Tribal
287	Thane	Jawhar						Looscbolder Structure						Vikramgad	Sakhara	Walvanda	234	19°49'4.26"N 73°11'6.21"E	forest land	Tribal
288	Thane	Jawhar						Looscbolder Structure						Vikramgad	Sakhara	Walvanda	234	19°49'3.92"N 73°11'6.92"E	forest land	Tribal
289	Thane	Jawhar						Looscbolder Structure						Vikramgad	Sakhara	Walvanda	234	19°49'3.63"N 73°11'7.53"E	forest land	Tribal
290	Thane	Jawhar						Looscbolder Structure						Vikramgad	Sakhara	Walvanda	234	19°49'3.98"N 73°11'7.49"E	forest land	Tribal
291	Thane	Jawhar						Looscbolder Structure						Vikramgad	Sakhara	Walvanda	234	19°49'3.89"N 73°11'7.90"E	forest land	Tribal
292	Thane	Jawhar						Looscbolder Structure						Vikramgad	Sakhara	Walvanda	234	19°49'3.82"N 73°11'8.48"E	forest land	Tribal
293	Thane	Jawhar						Looscbolder Structure						Vikramgad	Sakhara	Walvanda	234	19°49'3.80"N 73°11'8.87"E	forest land	Tribal
294	Thane	Jawhar						Looscbolder Structure						Vikramgad	Sakhara	Walvanda	234	19°49'3.57"N 73°11'9.52"E	forest land	Tribal
295	Thane	Jawhar						Looscbolder Structure						Vikramgad	Sakhara	Walvanda	234	19°49'3.30"N 73°11'9.97"E	forest land	Tribal
296	Thane	Jawhar						Looscbolder Structure						Vikramgad	Sakhara	Walvanda	234	19°49'6.44"N 73°11'6.51"E	forest land	Tribal
297	Thane	Jawhar						Looscbolder Structure						Vikramgad	Sakhara	Walvanda	234	19°49'6.08"N 73°11'7.10"E	forest land	Tribal
298	Thane	Jawhar						Looscbolder Structure						Vikramgad	Sakhara	Walvanda	234	19°49'5.85"N 73°11'7.66"E	forest land	Tribal
299	Thane	Jawhar						Looscbolder Structure						Vikramgad	Sakhara	Walvanda	234	19°49'5.54"N 73°11'8.18"E	forest land	Tribal
300	Thane	Jawhar						Looscbolder Structure						Vikramgad	Sakhara	Walvanda	234	19°49'8.38"N 73°11'9.06"E	forest land	Tribal
301	Thane	Jawhar						Looscbolder Structure						Vikramgad	Sakhara	Walvanda	234	19°49'7.69"N 73°11'10.24"E	forest land	Tribal
302	Thane	Jawhar						Looscbolder Structure						Vikramgad	Sakhara	Walvanda	234	19°49'7.48"N 73°11'10.97"E	forest land	Tribal
303	Thane	Jawhar						Looscbolder Structure						Vikramgad	Sakhara	Walvanda	234	19°49'7.80"N 73°11'10.05"E	forest land	Tribal

Sr. No.	Circle	Division	Name of the Project	Project ID	Final sanction	Project Area (ha)	Details/ Particulars of work as per stipulated condition			Total Area/Total Quantum of specified work mentioned in col. 11	Total No of sites with respect to column. 12	Rate per unit (Rs.)	Amount (Rs. Lakhs)	Details of Area to be treated						
							Condition no. in the sanction letter	Type of plantation	Year of plantation (i.e. PPO/FYO/ SYO/TYO etc.)					Range	Round	Beat	Compartment no.	Latlong	Wheter forest land or non - forest land	Tribal/remote area or non-tribal area
1	2	3	4	5	6	7	8	9	10	11	12	13	14	15	16	17	18	19	20	21
304	Thane	Jawhar	Diversion of 445.29 ha. (Previously submitted for 531.186 ha.) of forest land for construction of Deharji Medium Irrigation Project Tal. Vikramgad. District Thane, Maharashtra.	11670/ (40)	MoEF No. 8-10/2009.FC, 42419	445.29	As Per stitupulated condition No.9	Looscbolder Structure						Vikramgad	Sakhara	Walvanda	234	19°49'8.41"N 73°11'9.66"E	forest land	Tribal
305	Thane	Jawhar						Looscbolder Structure						Vikramgad	Sakhara	Walvanda	234	19°49'10.10"N 73°11'10.88"E	forest land	Tribal
306	Thane	Jawhar						Looscbolder Structure						Vikramgad	Sakhara	Walvanda	234	19°49'10.33"N 73°11'11.34"E	forest land	Tribal
307	Thane	Jawhar						Looscbolder Structure						Vikramgad	Sakhara	Walvanda	234	19°49'9.75"N 73°11'11.85"E	forest land	Tribal
308	Thane	Jawhar						Looscbolder Structure						Vikramgad	Sakhara	Walvanda	234	19°49'11.67"N 73°11'13.47"E	forest land	Tribal
309	Thane	Jawhar						Looscbolder Structure						Vikramgad	Sakhara	Walvanda	234	19°49'10.98"N 73°11'13.80"E	forest land	Tribal
310	Thane	Jawhar						Looscbolder Structure						Vikramgad	Sakhara	Walvanda	234	19°49'8.10"N 73°11'23.76"E	forest land	Tribal
311	Thane	Jawhar						Looscbolder Structure						Vikramgad	Sakhara	Walvanda	234	19°49'8.12"N 73°11'23.44"E	forest land	Tribal
312	Thane	Jawhar						Looscbolder Structure						Vikramgad	Sakhara	Walvanda	234	19°49'7.75"N 73°11'23.42"E	forest land	Tribal
313	Thane	Jawhar						Looscbolder Structure						Vikramgad	Sakhara	Walvanda	234	19°49'7.25"N 73°11'23.47"E	forest land	Tribal
314	Thane	Jawhar						Looscbolder Structure						Vikramgad	Sakhara	Walvanda	234	19°49'7.39"N 73°11'23.13"E	forest land	Tribal
315	Thane	Jawhar						Looscbolder Structure						Vikramgad	Sakhara	Walvanda	234	19°49'7.08"N 73°11'23.01"E	forest land	Tribal
316	Thane	Jawhar						Looscbolder Structure						Vikramgad	Sakhara	Walvanda	234	19°49'6.97"N 73°11'22.73"E	forest land	Tribal
317	Thane	Jawhar						Looscbolder Structure						Vikramgad	Sakhara	Walvanda	234	19°49'6.55"N 73°11'22.43"E	forest land	Tribal
318	Thane	Jawhar						Looscbolder Structure						Vikramgad	Sakhara	Walvanda	234	19°49'6.22"N 73°11'22.15"E	forest land	Tribal
319	Thane	Jawhar						Looscbolder Structure						Vikramgad	Sakhara	Walvanda	234	19°49'5.94"N 73°11'22.08"E	forest land	Tribal
320	Thane	Jawhar						Looscbolder Structure						Vikramgad	Sakhara	Walvanda	234	19°49'5.45"N 73°11'22.12"E	forest land	Tribal
321	Thane	Jawhar						Looscbolder Structure						Vikramgad	Sakhara	Walvanda	234	19°49'4.93"N 73°11'22.47"E	forest land	Tribal

Sr. No.	Circle	Division	Name of the Project	Project ID	Final sanction	Project Area (ha)	Details/ Particulars of work as per stipulated condition			Total Area/Total Quantum of specified work mentioned in col. 11	Total No of sites with respect to column. 12	Rate per unit (Rs.)	Amount (Rs. Lakhs)	Details of Area to be treated						
							Condition no. in the sanction letter	Type of plantation	Year of plantation (i.e. PPO/FYO/ SYO/TYO etc.)					Range	Round	Beat	Compartment no.	Latlong	Wheter forest land or non - forest land	Tribal/remote area or non-tribal area
1	2	3	4	5	6	7	8	9	10	11	12	13	14	15	16	17	18	19	20	21
322	Thane	Jawhar	Diversion of 445.29 ha. (Previously submitted for 531.186 ha.) of forest land for construction of Deharji Medium Irrigation Project Tal. Vikramgad. District Thane, Maharashtra.	11670/ (40)	MoEF No. 8-10/2009.FC, 42419	445.29	As Per stitupulated condition No.9	Looscbolder Structure						Vikramgad	Sakhara	Walvanda	234	19°49'16.01"N 73°11'34.25"E	forest land	Tribal
323	Thane	Jawhar						Looscbolder Structure						Vikramgad	Sakhara	Walvanda	234	19°49'15.61"N 73°11'34.75"E	forest land	Tribal
324	Thane	Jawhar						Looscbolder Structure						Vikramgad	Sakhara	Walvanda	234	19°49'15.22"N 73°11'34.89"E	forest land	Tribal
325	Thane	Jawhar						Looscbolder Structure						Vikramgad	Sakhara	Walvanda	234	19°49'14.80"N 73°11'35.23"E	forest land	Tribal
326	Thane	Jawhar						Looscbolder Structure						Vikramgad	Sakhara	Walvanda	234	19°49'16.45"N 73°11'38.97"E	forest land	Tribal
327	Thane	Jawhar						Looscbolder Structure						Vikramgad	Sakhara	Walvanda	234	19°49'16.02"N 73°11'38.81"E	forest land	Tribal
328	Thane	Jawhar						Looscbolder Structure						Vikramgad	Sakhara	Walvanda	234	19°49'13.74"N 73°11'57.61"E	forest land	Tribal
329	Thane	Jawhar						Looscbolder Structure						Vikramgad	Sakhara	Walvanda	234	19°49'13.13"N 73°11'57.57"E	forest land	Tribal
330	Thane	Jawhar						Looscbolder Structure						Vikramgad	Sakhara	Walvanda	234	19°49'12.68"N 73°11'57.26"E	forest land	Tribal
331	Thane	Jawhar						Looscbolder Structure						Vikramgad	Sakhara	Walvanda	234	19°49'12.43"N 73°11'56.86"E	forest land	Tribal
332	Thane	Jawhar						Looscbolder Structure						Vikramgad	Sakhara	Walvanda	234	19°49'12.25"N 73°11'56.47"E	forest land	Tribal
333	Thane	Jawhar						Looscbolder Structure						Vikramgad	Sakhara	Walvanda	234	19°49'11.94"N 73°11'56.27"E	forest land	Tribal
334	Thane	Jawhar						Looscbolder Structure		51	51	-	11.50	Vikramgad	Sakhara	Chouk	235	19°49'11.65"N 73°11'55.71"E	forest land	Tribal
335	Thane	Jawhar						Looscbolder Structure						Vikramgad	Sakhara	Chouk	235	19°49'12.37"N 73°11'54.88"E	forest land	Tribal
336	Thane	Jawhar						Looscbolder Structure						Vikramgad	Sakhara	Chouk	235	19°49'12.59"N 73°11'54.26"E	forest land	Tribal
337	Thane	Jawhar						Looscbolder Structure						Vikramgad	Sakhara	Chouk	235	19°49'12.48"N 73°11'53.83"E	forest land	Tribal
338	Thane	Jawhar						Looscbolder Structure						Vikramgad	Sakhara	Chouk	235	19°49'14.54"N 73°12'1.17"E	forest land	Tribal
339	Thane	Jawhar						Looscbolder Structure						Vikramgad	Sakhara	Chouk	235	19°49'15.37"N 73°12'0.80"E	forest land	Tribal

Sr. No.	Circle	Division	Name of the Project	Project ID	Final sanction	Project Area (ha)	Details/ Particulars of work as per stipulated condition			Total Area/Total Quantum of specified work mentioned in col. 11	Total No of sites with respect to column. 12	Rate per unit (Rs.)	Amount (Rs. Lakhs)	Details of Area to be treated						
							Condition no. in the sanction letter	Type of plantation	Year of plantation (i.e. PPO/FYO/ SYO/TYO etc.)					Range	Round	Beat	Compartment no.	Latlong	Wheter forest land or non - forest land	Tribal/remote area or non-tribal area
1	2	3	4	5	6	7	8	9	10	11	12	13	14	15	16	17	18	19	20	21
340	Thane	Jawhar	Diversion of 445.29 ha. (Previously submitted for 531.186 ha.) of forest land for construction of Deharji Medium Irrigation Project Tal. Vikramgad. District Thane, Maharashtra.	11670/ (40)	MoEF No. 8-10/2009.FC, 42419	445.29	As Per stitupulated condition No.9	Looscbolder Structure						Vikramgad	Sakhara	Chouk	235	19°49'15.77"N 73°12'0.13"E	forest land	Tribal
341	Thane	Jawhar						Looscbolder Structure						Vikramgad	Sakhara	Chouk	235	19°49'16.27"N 73°11'59.36"E	forest land	Tribal
342	Thane	Jawhar						Looscbolder Structure						Vikramgad	Sakhara	Chouk	235	19°49'16.71"N 73°11'58.77"E	forest land	Tribal
343	Thane	Jawhar						Looscbolder Structure						Vikramgad	Sakhara	Chouk	235	19°49'17.64"N 73°11'58.30"E	forest land	Tribal
344	Thane	Jawhar						Looscbolder Structure						Vikramgad	Sakhara	Chouk	235	19°49'18.48"N 73°11'57.48"E	forest land	Tribal
345	Thane	Jawhar						Looscbolder Structure						Vikramgad	Sakhara	Chouk	235	19°49'18.82"N 73°11'56.60"E	forest land	Tribal
346	Thane	Jawhar						Looscbolder Structure						Vikramgad	Sakhara	Chouk	235	19°49'18.66"N 73°11'55.88"E	forest land	Tribal
347	Thane	Jawhar						Looscbolder Structure						Vikramgad	Sakhara	Chouk	235	19°49'18.61"N 73°11'55.08"E	forest land	Tribal
348	Thane	Jawhar						Looscbolder Structure						Vikramgad	Sakhara	Chouk	235	19°49'18.31"N 73°11'54.48"E	forest land	Tribal
349	Thane	Jawhar						Looscbolder Structure						Vikramgad	Sakhara	Chouk	235	19°49'18.09"N 73°11'53.86"E	forest land	Tribal
350	Thane	Jawhar						Looscbolder Structure						Vikramgad	Sakhara	Chouk	235	19°49'17.74"N 73°11'53.53"E	forest land	Tribal
351	Thane	Jawhar						Looscbolder Structure						Vikramgad	Sakhara	Chouk	235	19°49'17.23"N 73°11'53.15"E	forest land	Tribal
352	Thane	Jawhar						Looscbolder Structure						Vikramgad	Sakhara	Chouk	235	19°49'16.44"N 73°11'53.20"E	forest land	Tribal
353	Thane	Jawhar						Looscbolder Structure						Vikramgad	Sakhara	Chouk	235	19°49'9.63"N 73°12'4.48"E	forest land	Tribal
354	Thane	Jawhar						Looscbolder Structure						Vikramgad	Sakhara	Chouk	235	19°49'8.19"N 73°12'5.51"E	forest land	Tribal
355	Thane	Jawhar						Looscbolder Structure						Vikramgad	Sakhara	Chouk	235	19°49'7.20"N 73°12'6.24"E	forest land	Tribal
356	Thane	Jawhar						Looscbolder Structure						Vikramgad	Sakhara	Chouk	235	19°49'5.88"N 73°12'6.88"E	forest land	Tribal
357	Thane	Jawhar						Looscbolder Structure						Vikramgad	Sakhara	Chouk	235	19°49'6.11"N 73°12'7.23"E	forest land	Tribal

Sr. No.	Circle	Division	Name of the Project	Project ID	Final sanction	Project Area (ha)	Details/ Particulars of work as per stipulated condition			Total Area/Total Quantum of specified work mentioned in col. 11	Total No of sites with respect to column. 12	Rate per unit (Rs.)	Amount (Rs. Lakhs)	Details of Area to be treated						
							Condition no. in the sanction letter	Type of plantation	Year of plantation (i.e. PPO/FYO/ SYO/TYO etc.)					Range	Round	Beat	Compartment no.	Latlong	Wheter forest land or non - forest land	Tribal/remote area or non-tribal area
1	2	3	4	5	6	7	8	9	10	11	12	13	14	15	16	17	18	19	20	21
358	Thane	Jawhar	Diversion of 445.29 ha. (Previously submitted for 531.186 ha.) of forest land for construction of Deharji Medium Irrigation Project Tal. Vikramgad. District Thane, Maharashtra.	11670/ (40)	MoEF No. 8-10/2009.FC, 42419	445.29	As Per stitupulated condition No.9	Looscbolder Structure						Vikramgad	Sakhara	Chouk	235	19°49'6.58"N 73°12'7.86"E	forest land	Tribal
359	Thane	Jawhar						Looscbolder Structure						Vikramgad	Sakhara	Chouk	235	19°49'6.34"N 73°12'8.68"E	forest land	Tribal
360	Thane	Jawhar						Looscbolder Structure						Vikramgad	Sakhara	Chouk	235	19°49'6.03"N 73°12'9.35"E	forest land	Tribal
361	Thane	Jawhar						Looscbolder Structure						Vikramgad	Sakhara	Chouk	235	19°49'4.72"N 73°12'13.89"E	forest land	Tribal
362	Thane	Jawhar						Looscbolder Structure						Vikramgad	Sakhara	Chouk	235	19°49'4.38"N 73°12'13.52"E	forest land	Tribal
363	Thane	Jawhar						Looscbolder Structure						Vikramgad	Sakhara	Chouk	235	19°49'3.87"N 73°12'13.29"E	forest land	Tribal
364	Thane	Jawhar						Looscbolder Structure						Vikramgad	Sakhara	Chouk	235	19°49'1.42"N 73°12'13.22"E	forest land	Tribal
365	Thane	Jawhar						Looscbolder Structure						Vikramgad	Sakhara	Chouk	235	19°49'0.81"N 73°12'13.20"E	forest land	Tribal
366	Thane	Jawhar						Looscbolder Structure						Vikramgad	Sakhara	Chouk	235	19°49'0.45"N 73°12'12.91"E	forest land	Tribal
367	Thane	Jawhar						Looscbolder Structure						Vikramgad	Sakhara	Chouk	235	19°48'59.90"N 73°12'12.76"E	forest land	Tribal
368	Thane	Jawhar						Looscbolder Structure						Vikramgad	Sakhara	Chouk	235	19°49'0.51"N 73°12'11.92"E	forest land	Tribal
369	Thane	Jawhar						Looscbolder Structure						Vikramgad	Sakhara	Chouk	235	19°49'0.41"N 73°12'11.41"E	forest land	Tribal
370	Thane	Jawhar						Looscbolder Structure						Vikramgad	Sakhara	Chouk	235	19°48'59.85"N 73°12'10.69"E	forest land	Tribal
371	Thane	Jawhar						Looscbolder Structure						Vikramgad	Sakhara	Chouk	235	19°48'59.49"N 73°12'10.48"E	forest land	Tribal
372	Thane	Jawhar						Looscbolder Structure						Vikramgad	Sakhara	Chouk	235	19°48'59.14"N 73°12'10.05"E	forest land	Tribal
373	Thane	Jawhar						Looscbolder Structure						Vikramgad	Sakhara	Chouk	235	19°48'58.21"N 73°12'9.26"E	forest land	Tribal
374	Thane	Jawhar						Looscbolder Structure						Vikramgad	Sakhara	Chouk	235	19°48'59.10"N 73°12'14.62"E	forest land	Tribal
375	Thane	Jawhar						Looscbolder Structure						Vikramgad	Sakhara	Chouk	235	19°48'59.09"N 73°12'14.02"E	forest land	Tribal

Sr. No.	Circle	Division	Name of the Project	Project ID	Final sanction	Project Area (ha)	Details/ Particulars of work as per stipulated condition			Total Area/Total Quantum of specified work mentioned in col. 11	Total No of sites with respect to column. 12	Rate per unit (Rs.)	Amount (Rs. Lakhs)	Details of Area to be treated						
							Condition no. in the sanction letter	Type of plantation	Year of plantation (i.e. PPO/FYO/ SYO/TYO etc.)					Range	Round	Beat	Compartment no.	Latlong	Wheter forest land or non - forest land	Tribal/remote area or non-tribal area
1	2	3	4	5	6	7	8	9	10	11	12	13	14	15	16	17	18	19	20	21
376	Thane	Jawhar	Diversion of 445.29 ha. (Previously submitted for 531.186 ha.) of forest land for construction of Deharji Medium Irrigation Project Tal. Vikramgad. District Thane, Maharashtra.	11670/ (40)	MoEF No. 8-10/2009.FC, 42419	445.29	As Per stitupulated condition No.9	Looscbolder Structure						Vikramgad	Sakhara	Chouk	235	19°48'58.93"N 73°12'13.44"E	forest land	Tribal
377	Thane	Jawhar						Looscbolder Structure						Vikramgad	Sakhara	Chouk	235	19°48'59.04"N 73°12'12.79"E	forest land	Tribal
378	Thane	Jawhar						Looscbolder Structure						Vikramgad	Sakhara	Chouk	235	19°48'58.82"N 73°12'12.04"E	forest land	Tribal
379	Thane	Jawhar						Looscbolder Structure						Vikramgad	Sakhara	Chouk	235	19°48'58.90"N 73°12'11.34"E	forest land	Tribal
380	Thane	Jawhar						Looscbolder Structure						Vikramgad	Sakhara	Chouk	235	19°48'58.42"N 73°12'10.75"E	forest land	Tribal
381	Thane	Jawhar						Looscbolder Structure						Vikramgad	Sakhara	Chouk	235	19°49'0.80"N 73°12'23.42"E	forest land	Tribal
382	Thane	Jawhar						Looscbolder Structure						Vikramgad	Sakhara	Chouk	235	19°49'0.42"N 73°12'25.43"E	forest land	Tribal
383	Thane	Jawhar						Looscbolder Structure						Vikramgad	Sakhara	Chouk	235	19°49'0.44"N 73°12'27.05"E	forest land	Tribal
384	Thane	Jawhar						Looscbolder Structure						Vikramgad	Sakhara	Chouk	235	19°49'0.97"N 73°12'28.42"E	forest land	Tribal
			Total						**0**	**250**	**250**	**0**	**56.39**							
385	Thane	Jawhar	Diversion of 445.29 ha. (Previously submitted for 531.186 ha.) of forest land for construction of Deharji Medium Irrigation Project Tal. Vikramgad. District Thane, Maharashtra.	11670/ (40)	MoEF No. 8-10/2009.FC, 42419	445.29	As Per stitupulated condition No.9	Looscbolder Structure		31	31	0	6.99	South Jawhar	Dengachimet	Kashivali	259	N 19°52' 9 E 73°11' 24	forest land	Tribal
386	Thane	Jawhar						Looscbolder Structure						South Jawhar	Dengachimet	Kashivali	259	N 19°52' 9 E 73°11' 25	forest land	Tribal
387	Thane	Jawhar						Looscbolder Structure						South Jawhar	Dengachimet	Kashivali	259	N 19°52' 9 E 73°11' 24	forest land	Tribal
388	Thane	Jawhar						Looscbolder Structure						South Jawhar	Dengachimet	Kashivali	259	N 19°52' 8 E 73°11' 25	forest land	Tribal
389	Thane	Jawhar						Looscbolder Structure						South Jawhar	Dengachimet	Kashivali	259	N 19°52' 7 E 73°11' 26	forest land	Tribal
390	Thane	Jawhar						Looscbolder Structure						South Jawhar	Dengachimet	Kashivali	259	N 19°52' 7 E 73°11' 28	forest land	Tribal
391	Thane	Jawhar						Looscbolder Structure						South Jawhar	Dengachimet	Kashivali	259	N 19°52' 7 E 73°11' 26	forest land	Tribal
392	Thane	Jawhar						Looscbolder Structure						South Jawhar	Dengachimet	Kashivali	259	N 19°52' 8 E 73°11' 26	forest land	Tribal

Sr. No.	Circle	Division	Name of the Project	Project ID	Final sanction	Project Area (ha)	Details/ Particulars of work as per stipulated condition			Total Area/Total Quantum of specified work mentioned in col. 11	Total No of sites with respect to column. 12	Rate per unit (Rs.)	Amount (Rs. Lakhs)	Details of Area to be treated						
							Condition no. in the sanction letter	Type of plantation	Year of plantation (i.e. PPO/FYO/ SYO/TYO etc.)					Range	Round	Beat	Compartment no.	Latlong	Wheter forest land or non - forest land	Tribal/remote area or non-tribal area
1	2	3	4	5	6	7	8	9	10	11	12	13	14	15	16	17	18	19	20	21
393	Thane	Jawhar	Diversion of 445.29 ha. (Previously submitted for 531.186 ha.) of forest land for construction of Deharji Medium Irrigation Project Tal. Vikramgad. District Thane, Maharashtra.	11670/ (40)	MoEF No. 8-10/2009.FC, 42419	445.29	As Per stitupulated condition No.9	Looscbolder Structure						South Jawhar	Dengachimet	Kashivali	259	N 19°52' 7 E 73°11' 29	forest land	Tribal
394	Thane	Jawhar						Looscbolder Structure						South Jawhar	Dengachimet	Kashivali	259	N 19°52' 6 E 73°11' 31	forest land	Tribal
395	Thane	Jawhar						Looscbolder Structure						South Jawhar	Dengachimet	Kashivali	259	N 19°52' 6 E 73°11' 31	forest land	Tribal
396	Thane	Jawhar						Looscbolder Structure						South Jawhar	Dengachimet	Kashivali	259	N 19°52' 7 E 73°11' 29	forest land	Tribal
397	Thane	Jawhar						Looscbolder Structure						South Jawhar	Dengachimet	Kashivali	259	N 19°52'18 E 73°11' 13	forest land	Tribal
398	Thane	Jawhar						Looscbolder Structure						South Jawhar	Dengachimet	Kashivali	259	N 19°52' 19 E 73°11'13	forest land	Tribal
399	Thane	Jawhar						Looscbolder Structure						South Jawhar	Dengachimet	Kashivali	259	N 19°52' 15 E 73°11'18	forest land	Tribal
400	Thane	Jawhar						Looscbolder Structure						South Jawhar	Dengachimet	Kashivali	259	N 19°52' 18 E 73°11'13	forest land	Tribal
401	Thane	Jawhar						Looscbolder Structure						South Jawhar	Dengachimet	Kashivali	259	N 19°52' 16 E 73°11'17	forest land	Tribal
402	Thane	Jawhar						Looscbolder Structure						South Jawhar	Dengachimet	Kashivali	259	N 19°52' 15 E 73°11'17	forest land	Tribal
403	Thane	Jawhar						Looscbolder Structure						South Jawhar	Dengachimet	Kashivali	259	N 19°52' 12 E 73°11'12	forest land	Tribal
404	Thane	Jawhar						Looscbolder Structure						South Jawhar	Dengachimet	Kashivali	259	N 19°52' 15 E 73°11'17	forest land	Tribal
405	Thane	Jawhar						Looscbolder Structure						South Jawhar	Dengachimet	Kashivali	259	N 19°52' 9 E 73°11'23	forest land	Tribal
406	Thane	Jawhar						Looscbolder Structure						South Jawhar	Dengachimet	Kashivali	259	N 19°52' 10 E 73°11'23	forest land	Tribal
407	Thane	Jawhar						Looscbolder Structure						South Jawhar	Dengachimet	Kashivali	259	N 19°52' 10 E 73°11'24	forest land	Tribal
408	Thane	Jawhar						Looscbolder Structure						South Jawhar	Dengachimet	Kashivali	259	N 19°52' 10 E 73°11'22	forest land	Tribal
409	Thane	Jawhar						Looscbolder Structure						South Jawhar	Dengachimet	Kashivali	259	N 19°52' 10 E 73°11'22	forest land	Tribal
410	Thane	Jawhar						Looscbolder Structure						South Jawhar	Dengachimet	Kashivali	259	N 19°52' 11 E 73°11'22	forest land	Tribal
411	Thane	Jawhar						Looscbolder Structure						South Jawhar	Dengachimet	Kashivali	259	N 19°52' 13 E 73°11'20	forest land	Tribal

Sr. No.	Circle	Division	Name of the Project	Project ID	Final sanction	Project Area (ha)	Details/ Particulars of work as per stipulated condition			Total Area/Total Quantum of specified work mentioned in col. 11	Total No of sites with respect to column. 12	Rate per unit (Rs.)	Amount (Rs. Lakhs)	Details of Area to be treated						
							Condition no. in the sanction letter	Type of plantation	Year of plantation (i.e. PPO/FYO/ SYO/TYO etc.)					Range	Round	Beat	Compartment no.	Latlong	Wheter forest land or non - forest land	Tribal/remote area or non-tribal area
1	2	3	4	5	6	7	8	9	10	11	12	13	14	15	16	17	18	19	20	21
412	Thane	Jawhar	Diversion of 445.29 ha. (Previously submitted for 531.186 ha.) of forest land for construction of Deharji Medium Irrigation Project Tal. Vikramgad. District Thane, Maharashtra.	11670/ (40)	MoEF No. 8-10/2009.FC, 42419	445.29	As Per stitupulated condition No.9	Looscbolder Structure						South Jawhar	Dengachimet	Kashivali	259	N 19°52' 15 E 73°11'18	forest land	Tribal
413	Thane	Jawhar						Looscbolder Structure						South Jawhar	Dengachimet	Kashivali	259	N 19°52' 14 E 73°11'18	forest land	Tribal
414	Thane	Jawhar						Looscbolder Structure						South Jawhar	Dengachimet	Kashivali	259	N 19°52' 15 E 73°11'18	forest land	Tribal
415	Thane	Jawhar						Looscbolder Structure						South Jawhar	Dengachimet	Kashivali	259	N 19°52' 18 E 73°11'13	forest land	Tribal
416	Thane	Jawhar						Looscbolder Structure		19	19	0	4.28	South Jawhar	Dengachimet	Kashivali	255	N 19°52' 24 E 73°10'40	forest land	Tribal
417	Thane	Jawhar						Looscbolder Structure						South Jawhar	Dengachimet	Kashivali	255	N 19°52' 22 E 73°10'40	forest land	Tribal
418	Thane	Jawhar						Looscbolder Structure						South Jawhar	Dengachimet	Kashivali	255	N 19°52' 23 E 73°10'39	forest land	Tribal
419	Thane	Jawhar						Looscbolder Structure						South Jawhar	Dengachimet	Kashivali	255	N 19°52' 22 E 73°10'38	forest land	Tribal
420	Thane	Jawhar						Looscbolder Structure						South Jawhar	Dengachimet	Kashivali	255	N 19°52' 22 E 73°10'39	forest land	Tribal
421	Thane	Jawhar						Looscbolder Structure						South Jawhar	Dengachimet	Kashivali	255	N 19°52' 20 E 73°10'38	forest land	Tribal
422	Thane	Jawhar						Looscbolder Structure						South Jawhar	Dengachimet	Kashivali	255	N 19°52' 22 E 73°10'38	forest land	Tribal
423	Thane	Jawhar						Looscbolder Structure						South Jawhar	Dengachimet	Kashivali	255	N 19°52' 18 E 73°10'36	forest land	Tribal
424	Thane	Jawhar						Looscbolder Structure						South Jawhar	Dengachimet	Kashivali	255	N 19°52' 19 E 73°10'37	forest land	Tribal
425	Thane	Jawhar						Looscbolder Structure						South Jawhar	Dengachimet	Kashivali	255	N 19°52' 19 E 73°10'36	forest land	Tribal
426	Thane	Jawhar						Looscbolder Structure						South Jawhar	Dengachimet	Kashivali	255	N 19°52' 18 E 73°10'36	forest land	Tribal
427	Thane	Jawhar						Looscbolder Structure						South Jawhar	Dengachimet	Kashivali	255	N 19°52' 18 E 73°10'36	forest land	Tribal
428	Thane	Jawhar						Looscbolder Structure						South Jawhar	Dengachimet	Kashivali	255	N 19°52' 17 E 73°10'35	forest land	Tribal
429	Thane	Jawhar						Looscbolder Structure						South Jawhar	Dengachimet	Kashivali	255	N 19°52' 16 E 73°10'36	forest land	Tribal
430	Thane	Jawhar						Looscbolder Structure						South Jawhar	Dengachimet	Kashivali	255	N 19°52' 03 E 73°10'50	forest land	Tribal
431	Thane	Jawhar						Looscbolder Structure						South Jawhar	Dengachimet	Kashivali	255	N 19°52' 15 E 73°10'36	forest land	Tribal
432	Thane	Jawhar						Looscbolder Structure						South Jawhar	Dengachimet	Kashivali	255	N 19°52' 3 E 73°10'50	forest land	Tribal
433	Thane	Jawhar						Looscbolder Structure						South Jawhar	Dengachimet	Kashivali	255	N 19°52' 4 E 73°10'51	forest land	Tribal

Sr. No.	Circle	Division	Name of the Project	Project ID	Final sanction	Project Area (ha)	Details/ Particulars of work as per stipulated condition			Total Area/Total Quantum of specified work mentioned in col. 11	Total No of sites with respect to column. 12	Rate per unit (Rs.)	Amount (Rs. Lakhs)	Details of Area to be treated						
							Condition no. in the sanction letter	Type of plantation	Year of plantation (i.e. PPO/FYO/ SYO/TYO etc.)					Range	Round	Beat	Compartment no.	Latlong	Wheter forest land or non - forest land	Tribal/remote area or non-tribal area
1	2	3	4	5	6	7	8	9	10	11	12	13	14	15	16	17	18	19	20	21
434	Thane	Jawhar	Diversion of 445.29 ha. (Previously submitted for 531.186 ha.) of forest land for construction of Deharji Medium Irrigation Project Tal. Vikramgad. District Thane, Maharashtra.	11670/ (40)	MoEF No. 8-10/2009.FC, 42419	445.29	As Per stitupulated condition No.9	Looscbolder Structure						South Jawhar	Dengachimet	Kashivali	255	N 19°52' 26 E 73°10'39	forest land	Tribal
435	Thane	Jawhar						Looscbolder Structure	0	21	21	0	4.74	South Jawhar	Dengachimet	Shiroshi	256	N 19.873139 E 73.154667	forest land	Tribal
436	Thane	Jawhar						Looscbolder Structure						South Jawhar	Dengachimet	Shiroshi	256	N 19.873375 E 73.153988	forest land	Tribal
437	Thane	Jawhar						Looscbolder Structure						South Jawhar	Dengachimet	Shiroshi	256	N 19.874376 E 73.153029	forest land	Tribal
438	Thane	Jawhar						Looscbolder Structure						South Jawhar	Dengachimet	Shiroshi	256	N 19.874033 E 73.153212	forest land	Tribal
439	Thane	Jawhar						Looscbolder Structure						South Jawhar	Dengachimet	Shiroshi	256	N 19.873198 E 73.154524	forest land	Tribal
440	Thane	Jawhar						Looscbolder Structure						South Jawhar	Dengachimet	Shiroshi	256	N 19.874633 E 73.152814	forest land	Tribal
441	Thane	Jawhar						Looscbolder Structure						South Jawhar	Dengachimet	Shiroshi	256	N 19.874298 E 73.153101	forest land	Tribal
442	Thane	Jawhar						Looscbolder Structure						South Jawhar	Dengachimet	Shiroshi	256	N 19.873195 E 73.154557	forest land	Tribal
443	Thane	Jawhar						Looscbolder Structure						South Jawhar	Dengachimet	Shiroshi	256	N 19.873406 E 73.153908	forest land	Tribal
444	Thane	Jawhar						Looscbolder Structure						South Jawhar	Dengachimet	Shiroshi	256	N 19.873331 E 73.154188	forest land	Tribal
445	Thane	Jawhar						Looscbolder Structure						South Jawhar	Dengachimet	Shiroshi	256	N 19.873598 E 73.153605	forest land	Tribal
446	Thane	Jawhar						Looscbolder Structure						South Jawhar	Dengachimet	Shiroshi	256	N 19.873888 E 73.152949	forest land	Tribal
447	Thane	Jawhar						Looscbolder Structure						South Jawhar	Dengachimet	Shiroshi	256	N 19.873429 E 73.153826	forest land	Tribal
448	Thane	Jawhar						Looscbolder Structure						South Jawhar	Dengachimet	Shiroshi	256	N 19.87392 E 73.152822	forest land	Tribal
449	Thane	Jawhar						Looscbolder Structure						South Jawhar	Dengachimet	Shiroshi	256	N 19.873917 E 73.152848	forest land	Tribal
450	Thane	Jawhar						Looscbolder Structure						South Jawhar	Dengachimet	Shiroshi	256	N 19.873384 E 73.153963	forest land	Tribal
451	Thane	Jawhar						Looscbolder Structure						South Jawhar	Dengachimet	Shiroshi	256	N 19.87389 E 73.153089	forest land	Tribal

Sr. No.	Circle	Division	Name of the Project	Project ID	Final sanction	Project Area (ha)	Details/ Particulars of work as per stipulated condition			Total Area/Total Quantum of specified work mentioned in col. 11	Total No of sites with respect to column. 12	Rate per unit (Rs.)	Amount (Rs. Lakhs)	Details of Area to be treated						
							Condition no. in the sanction letter	Type of plantation	Year of plantation (i.e. PPO/FYO/ SYO/TYO etc.)					Range	Round	Beat	Compartment no.	Latlong	Wheter forest land or non - forest land	Tribal/remote area or non-tribal area
1	2	3	4	5	6	7	8	9	10	11	12	13	14	15	16	17	18	19	20	21
452	Thane	Jawhar	Diversion of 445.29 ha. (Previously submitted for 531.186 ha.) of forest land for construction of Deharji Medium Irrigation Project Tal. Vikramgad. District Thane, Maharashtra.	11670/ (40)	MoEF No. 8-10/2009.FC, 42419	445.29	As Per stitupulated condition No.9	Looscbolder Structure						South Jawhar	Dengachimet	Shiroshi	256	N 19.874212 E 73.153149	forest land	Tribal
453	Thane	Jawhar						Looscbolder Structure						South Jawhar	Dengachimet	Shiroshi	256	N 19.873198 E 73.154521	forest land	Tribal
454	Thane	Jawhar						Looscbolder Structure						South Jawhar	Dengachimet	Shiroshi	256	N 19.873791 E 73.153342	forest land	Tribal
455	Thane	Jawhar						Looscbolder Structure						South Jawhar	Dengachimet	Shiroshi	256	N 19.873366 E 73.154084	forest land	Tribal
456	Thane	Jawhar						Looscbolder Structure	0	29	29	0	6.54	South Jawhar	Dengachimet	Shiroshi	257	N 19.851513 E 73.167288	forest land	Tribal
457	Thane	Jawhar						Looscbolder Structure						South Jawhar	Dengachimet	Shiroshi	257	N 19.851649 E 73.167461	forest land	Tribal
458	Thane	Jawhar						Looscbolder Structure						South Jawhar	Dengachimet	Shiroshi	257	N 19.851653 E 73.167494	forest land	Tribal
459	Thane	Jawhar						Looscbolder Structure						South Jawhar	Dengachimet	Shiroshi	257	N 19.851658 E 73.167602	forest land	Tribal
460	Thane	Jawhar						Looscbolder Structure						South Jawhar	Dengachimet	Shiroshi	257	N 19.851698 E 73.167641	forest land	Tribal
461	Thane	Jawhar						Looscbolder Structure						South Jawhar	Dengachimet	Shiroshi	257	N 19.851804 E 73.167693	forest land	Tribal
462	Thane	Jawhar						Looscbolder Structure						South Jawhar	Dengachimet	Shiroshi	257	N 19.851677 E 73.167895	forest land	Tribal
463	Thane	Jawhar						Looscbolder Structure						South Jawhar	Dengachimet	Shiroshi	257	N 19.851664 E 73.16785	forest land	Tribal
464	Thane	Jawhar						Looscbolder Structure						South Jawhar	Dengachimet	Shiroshi	257	N 19.851653 E 73.167909	forest land	Tribal
465	Thane	Jawhar						Looscbolder Structure						South Jawhar	Dengachimet	Shiroshi	257	N 19.851824 E 73.168005	forest land	Tribal
466	Thane	Jawhar						Looscbolder Structure						South Jawhar	Dengachimet	Shiroshi	257	N 19.852631 E 73.168364	forest land	Tribal
467	Thane	Jawhar						Looscbolder Structure						South Jawhar	Dengachimet	Shiroshi	257	N 19.852655 E 73.168414	forest land	Tribal
468	Thane	Jawhar						Looscbolder Structure						South Jawhar	Dengachimet	Shiroshi	257	N 19.852684 E 73.168446	forest land	Tribal
469	Thane	Jawhar						Looscbolder Structure						South Jawhar	Dengachimet	Shiroshi	257	N 19.852765 E 73.168503	forest land	Tribal

Sr. No.	Circle	Division	Name of the Project	Project ID	Final sanction	Project Area (ha)	Details/ Particulars of work as per stipulated condition			Total Area/Total Quantum of specified work mentioned in col. 11	Total No of sites with respect to column. 12	Rate per unit (Rs.)	Amount (Rs. Lakhs)	Details of Area to be treated						
							Condition no. in the sanction letter	Type of plantation	Year of plantation (i.e. PPO/FYO/ SYO/TYO etc.)					Range	Round	Beat	Compartment no.	Latlong	Wheter forest land or non - forest land	Tribal/remote area or non-tribal area
1	2	3	4	5	6	7	8	9	10	11	12	13	14	15	16	17	18	19	20	21
470	Thane	Jawhar	Diversion of 445.29 ha. (Previously submitted for 531.186 ha.) of forest land for construction of Deharji Medium Irrigation Project Tal. Vikramgad. District Thane, Maharashtra.	11670/ (40)	MoEF No. 8-10/2009.FC, 42419	445.29	As Per stitupulated condition No.9	Looscbolder Structure						South Jawhar	Dengachimet	Shiroshi	257	N 19.852732 E 73.168604	forest land	Tribal
471	Thane	Jawhar						Looscbolder Structure						South Jawhar	Dengachimet	Shiroshi	257	N 19.852729 E 73.168626	forest land	Tribal
472	Thane	Jawhar						Looscbolder Structure						South Jawhar	Dengachimet	Shiroshi	257	N 19.852841 E 73.168724	forest land	Tribal
473	Thane	Jawhar						Looscbolder Structure						South Jawhar	Dengachimet	Shiroshi	257	N 19.853761 E 73.168177	forest land	Tribal
474	Thane	Jawhar						Looscbolder Structure						South Jawhar	Dengachimet	Shiroshi	257	N 19.854126 E 73.168193	forest land	Tribal
475	Thane	Jawhar						Looscbolder Structure						South Jawhar	Dengachimet	Shiroshi	257	N 19.854083 E 73.168066	forest land	Tribal
476	Thane	Jawhar						Looscbolder Structure						South Jawhar	Dengachimet	Shiroshi	257	N 19.854186 E 73.167987	forest land	Tribal
477	Thane	Jawhar						Looscbolder Structure						South Jawhar	Dengachimet	Shiroshi	257	N 19.854318 E 73.168075	forest land	Tribal
478	Thane	Jawhar						Looscbolder Structure						South Jawhar	Dengachimet	Shiroshi	257	N 19.854375 E 73.168053	forest land	Tribal
479	Thane	Jawhar						Looscbolder Structure						South Jawhar	Dengachimet	Shiroshi	257	N 19.854454 E 73.168023	forest land	Tribal
480	Thane	Jawhar						Looscbolder Structure						South Jawhar	Dengachimet	Shiroshi	257	N 19.854544 E 73.16801	forest land	Tribal
481	Thane	Jawhar						Looscbolder Structure						South Jawhar	Dengachimet	Shiroshi	257	N 19.854669 E 73.168039	forest land	Tribal
482	Thane	Jawhar						Looscbolder Structure						South Jawhar	Dengachimet	Shiroshi	257	N 19.854691 E 73.168027	forest land	Tribal
483	Thane	Jawhar						Looscbolder Structure						South Jawhar	Dengachimet	Shiroshi	257	N 19.854797 E 73.168003	forest land	Tribal
484	Thane	Jawhar						Looscbolder Structure						South Jawhar	Dengachimet	Shiroshi	257	N 19.854956 E 73.161983	forest land	Tribal
485	Thane	Jawhar						Looscbolder Structure	0	40	40	0	9.02	South Jawhar	Jawhar	Kasatwadi	254	N 19.896556 E 73.199158	forest land	Tribal
486	Thane	Jawhar						Looscbolder Structure						South Jawhar	Jawhar	Kasatwadi	254	N 19.895922 E 73.199606	forest land	Tribal
487	Thane	Jawhar						Looscbolder Structure						South Jawhar	Jawhar	Kasatwadi	254	N 19.895442 E 73.197888	forest land	Tribal
488	Thane	Jawhar						Looscbolder Structure						South Jawhar	Jawhar	Kasatwadi	254	N 19.895165 E 73.197788	forest land	Tribal
489	Thane	Jawhar						Looscbolder Structure						South Jawhar	Jawhar	Kasatwadi	254	N 19.894823 E 73.197872	forest land	Tribal

Sr. No.	Circle	Division	Name of the Project	Project ID	Final sanction	Project Area (ha)	Details/ Particulars of work as per stipulated condition			Total Area/Total Quantum of specified work mentioned in col. 11	Total No of sites with respect to column. 12	Rate per unit (Rs.)	Amount (Rs. Lakhs)	Details of Area to be treated						
							Condition no. in the sanction letter	Type of plantation	Year of plantation (i.e. PPO/FYO/ SYO/TYO etc.)					Range	Round	Beat	Compartment no.	Latlong	Wheter forest land or non - forest land	Tribal/remote area or non-tribal area
1	2	3	4	5	6	7	8	9	10	11	12	13	14	15	16	17	18	19	20	21
490	Thane	Jawhar	Diversion of 445.29 ha. (Previously submitted for 531.186 ha.) of forest land for construction of Deharji Medium Irrigation Project Tal. Vikramgad. District Thane, Maharashtra.	11670/ (40)	MoEF No. 8-10/2009.FC, 42419	445.29	As Per stitupulated condition No.9	Looscbolder Structure						South Jawhar	Jawhar	Kasatwadi	254	N 19.894483 E 73.197983	forest land	Tribal
491	Thane	Jawhar						Looscbolder Structure						South Jawhar	Jawhar	Kasatwadi	254	N 19.894229 E 73.197866	forest land	Tribal
492	Thane	Jawhar						Looscbolder Structure						South Jawhar	Jawhar	Kasatwadi	254	N 19.893871 E 73.197809	forest land	Tribal
493	Thane	Jawhar						Looscbolder Structure						South Jawhar	Jawhar	Kasatwadi	254	N 19.893454 E 73.197603	forest land	Tribal
494	Thane	Jawhar						Looscbolder Structure						South Jawhar	Jawhar	Kasatwadi	254	N 19.893049 E 73.197681	forest land	Tribal
495	Thane	Jawhar						Looscbolder Structure						South Jawhar	Jawhar	Kasatwadi	254	N 19.892520 E 73.197549	forest land	Tribal
496	Thane	Jawhar						Looscbolder Structure						South Jawhar	Jawhar	Kasatwadi	254	N 19.891867 E 73.197549	forest land	Tribal
497	Thane	Jawhar						Looscbolder Structure						South Jawhar	Jawhar	Kasatwadi	254	N 19.887485 E 73.196053	forest land	Tribal
498	Thane	Jawhar						Looscbolder Structure						South Jawhar	Jawhar	Kasatwadi	254	N 19.887554 E 73.195815	forest land	Tribal
499	Thane	Jawhar						Looscbolder Structure						South Jawhar	Jawhar	Kasatwadi	254	N 19.887035 E 73.195489	forest land	Tribal
500	Thane	Jawhar						Looscbolder Structure						South Jawhar	Jawhar	Kasatwadi	254	N 19.887625 E 73.195105	forest land	Tribal
501	Thane	Jawhar						Looscbolder Structure						South Jawhar	Jawhar	Kasatwadi	254	N 19.887542 E 73.194561	forest land	Tribal
502	Thane	Jawhar						Looscbolder Structure						South Jawhar	Jawhar	Kasatwadi	254	N 19.887841 E 73.194283	forest land	Tribal
503	Thane	Jawhar						Looscbolder Structure						South Jawhar	Jawhar	Kasatwadi	254	N 19.893876 E 73.198465	forest land	Tribal
504	Thane	Jawhar						Looscbolder Structure						South Jawhar	Jawhar	Kasatwadi	254	N 19.892365 E 73.198783	forest land	Tribal
505	Thane	Jawhar						Looscbolder Structure						South Jawhar	Jawhar	Kasatwadi	254	N 19.892328 E 73.199907	forest land	Tribal
506	Thane	Jawhar						Looscbolder Structure						South Jawhar	Jawhar	Kasatwadi	254	N 19.89095 E 73.190442	forest land	Tribal
507	Thane	Jawhar						Looscbolder Structure						South Jawhar	Jawhar	Kasatwadi	254	N 19.891204 E 73.200776	forest land	Tribal
508	Thane	Jawhar						Looscbolder Structure						South Jawhar	Jawhar	Kasatwadi	254	N 19.890522 E 73.199856	forest land	Tribal
509	Thane	Jawhar						Looscbolder Structure						South Jawhar	Jawhar	Kasatwadi	254	N 19.890489 E 73.199321	forest land	Tribal
510	Thane	Jawhar						Looscbolder Structure						South Jawhar	Jawhar	Kasatwadi	254	N 19.890119 E 73.198947	forest land	Tribal

Sr. No.	Circle	Division	Name of the Project	Project ID	Final sanction	Project Area (ha)	Details/ Particulars of work as per stipulated condition			Total Area/Total Quantum of specified work mentioned in col. 11	Total No of sites with respect to column. 12	Rate per unit (Rs.)	Amount (Rs. Lakhs)	Details of Area to be treated						
							Condition no. in the sanction letter	Type of plantation	Year of plantation (i.e. PPO/FYO/ SYO/TYO etc.)					Range	Round	Beat	Compartment no.	Latlong	Wheter forest land or non - forest land	Tribal/remote area or non-tribal area
1	2	3	4	5	6	7	8	9	10	11	12	13	14	15	16	17	18	19	20	21
511	Thane	Jawhar	Diversion of 445.29 ha. (Previously submitted for 531.186 ha.) of forest land for construction of Deharji Medium Irrigation Project Tal. Vikramgad. District Thane, Maharashtra.	11670/ (40)	MoEF No. 8-10/2009.FC, 42419	445.29	As Per stitupulated condition No.9	Looscbolder Structure						South Jawhar	Jawhar	Kasatwadi	254	N 19.889681 E 73.199779	forest land	Tribal
512	Thane	Jawhar						Looscbolder Structure						South Jawhar	Jawhar	Kasatwadi	254	N 19.887132 E 73.200627	forest land	Tribal
513	Thane	Jawhar						Looscbolder Structure						South Jawhar	Jawhar	Kasatwadi	254	N 19.887362 E 73.200962	forest land	Tribal
514	Thane	Jawhar						Looscbolder Structure						South Jawhar	Jawhar	Kasatwadi	254	N 19.880704 E 73.200869	forest land	Tribal
515	Thane	Jawhar						Looscbolder Structure						South Jawhar	Jawhar	Kasatwadi	254	N 19.886432 E 73.200647	forest land	Tribal
516	Thane	Jawhar						Looscbolder Structure						South Jawhar	Jawhar	Kasatwadi	254	N 19.887758 E 73.200496	forest land	Tribal
517	Thane	Jawhar						Looscbolder Structure						South Jawhar	Jawhar	Kasatwadi	254	N 19.885648 E 73.200376	forest land	Tribal
518	Thane	Jawhar						Looscbolder Structure						South Jawhar	Jawhar	Kasatwadi	254	N 19.885581 E 73.200941	forest land	Tribal
519	Thane	Jawhar						Looscbolder Structure						South Jawhar	Jawhar	Kasatwadi	254	N 19.883768 E 73.199637	forest land	Tribal
520	Thane	Jawhar						Looscbolder Structure						South Jawhar	Jawhar	Kasatwadi	254	N 19.883698 E 73.200671	forest land	Tribal
521	Thane	Jawhar						Looscbolder Structure						South Jawhar	Jawhar	Kasatwadi	254	N 19.883426 E 73.200937	forest land	Tribal
522	Thane	Jawhar						Looscbolder Structure						South Jawhar	Jawhar	Kasatwadi	254	N 19.882775 E 73.201917	forest land	Tribal
523	Thane	Jawhar						Looscbolder Structure						South Jawhar	Jawhar	Kasatwadi	254	N 19.883791 E 73.200319	forest land	Tribal
524	Thane	Jawhar						Looscbolder Structure						South Jawhar	Jawhar	Kasatwadi	254	N 19.883669 E 73.200426	forest land	Tribal
525	Thane	Jawhar						Looscbolder Structure	0	30	30	0	6.77	South Jawhar	Jawhar	Kadachimet	260	N 19.865813 E 73.206913	forest land	Tribal
526	Thane	Jawhar						Looscbolder Structure						South Jawhar	Jawhar	Kadachimet	260	N 19.865838 E 73.206891	forest land	Tribal
527	Thane	Jawhar						Looscbolder Structure						South Jawhar	Jawhar	Kadachimet	260	N 19.865797 E 73.206853	forest land	Tribal
528	Thane	Jawhar						Looscbolder Structure						South Jawhar	Jawhar	Kadachimet	260	N 19.865702 E 73.206836	forest land	Tribal

Sr. No.	Circle	Division	Name of the Project	Project ID	Final sanction	Project Area (ha)	Details/ Particulars of work as per stipulated condition			Total Area/Total Quantum of specified work mentioned in col. 11	Total No of sites with respect to column. 12	Rate per unit (Rs.)	Amount (Rs. Lakhs)	Details of Area to be treated						
							Condition no. in the sanction letter	Type of plantation	Year of plantation (i.e. PPO/FYO/ SYO/TYO etc.)					Range	Round	Beat	Compartment no.	Latlong	Wheter forest land or non - forest land	Tribal/remote area or non-tribal area
1	2	3	4	5	6	7	8	9	10	11	12	13	14	15	16	17	18	19	20	21
529	Thane	Jawhar	Diversion of 445.29 ha. (Previously submitted for 531.186 ha.) of forest land for construction of Deharji Medium Irrigation Project Tal. Vikramgad. District Thane, Maharashtra.	11670/ (40)	MoEF No. 8-10/2009.FC, 42419	445.29	As Per stitupulated condition No.9	Looscbolder Structure						South Jawhar	Jawhar	Kadachimet	260	N 19.865331 E 73.205649	forest land	Tribal
530	Thane	Jawhar						Looscbolder Structure						South Jawhar	Jawhar	Kadachimet	260	N 19.865248 E 73.205618	forest land	Tribal
531	Thane	Jawhar						Looscbolder Structure						South Jawhar	Jawhar	Kadachimet	260	N 19.865229 E 73.205632	forest land	Tribal
532	Thane	Jawhar						Looscbolder Structure						South Jawhar	Jawhar	Kadachimet	260	N 19.864886 E 73.205882	forest land	Tribal
533	Thane	Jawhar						Looscbolder Structure						South Jawhar	Jawhar	Kadachimet	260	N 19.864781 E 73.205868	forest land	Tribal
534	Thane	Jawhar						Looscbolder Structure						South Jawhar	Jawhar	Kadachimet	260	N 19.864816 E 73.205892	forest land	Tribal
535	Thane	Jawhar						Looscbolder Structure						South Jawhar	Jawhar	Kadachimet	260	N 19.864747 E 73.205841	forest land	Tribal
536	Thane	Jawhar						Looscbolder Structure						South Jawhar	Jawhar	Kadachimet	260	N 19.864678 E 73.205911	forest land	Tribal
537	Thane	Jawhar						Looscbolder Structure						South Jawhar	Jawhar	Kadachimet	260	N 19.864188 E 73.206379	forest land	Tribal
538	Thane	Jawhar						Looscbolder Structure						South Jawhar	Jawhar	Kadachimet	260	N 19.863896 E 73.206447	forest land	Tribal
539	Thane	Jawhar						Looscbolder Structure						South Jawhar	Jawhar	Kadachimet	260	N 19.863788 E 73.206516	forest land	Tribal
540	Thane	Jawhar						Looscbolder Structure						South Jawhar	Jawhar	Kadachimet	260	N 19.863762 E 73.206555	forest land	Tribal
541	Thane	Jawhar						Looscbolder Structure						South Jawhar	Jawhar	Kadachimet	260	N 19.863612 E 73.206834	forest land	Tribal
542	Thane	Jawhar						Looscbolder Structure						South Jawhar	Jawhar	Kadachimet	260	N 19.863604 E 73.206817	forest land	Tribal
543	Thane	Jawhar						Looscbolder Structure						South Jawhar	Jawhar	Kadachimet	260	N 19.863618 E 73.206812	forest land	Tribal
544	Thane	Jawhar						Looscbolder Structure						South Jawhar	Jawhar	Kadachimet	260	N 19.863506 E 73.206799	forest land	Tribal
545	Thane	Jawhar						Looscbolder Structure						South Jawhar	Jawhar	Kadachimet	260	N 19.863444 E 73.206778	forest land	Tribal
546	Thane	Jawhar						Looscbolder Structure						South Jawhar	Jawhar	Kadachimet	260	N 19.863389 E 73.206861	forest land	Tribal

Sr. No.	Circle	Division	Name of the Project	Project ID	Final sanction	Project Area (ha)	Details/ Particulars of work as per stipulated condition			Total Area/Total Quantum of specified work mentioned in col. 11	Total No of sites with respect to column. 12	Rate per unit (Rs.)	Amount (Rs. Lakhs)	Details of Area to be treated						
							Condition no. in the sanction letter	Type of plantation	Year of plantation (i.e. PPO/FYO/ SYO/TYO etc.)					Range	Round	Beat	Compartment no.	Latlong	Wheter forest land or non - forest land	Tribal/remote area or non-tribal area
1	2	3	4	5	6	7	8	9	10	11	12	13	14	15	16	17	18	19	20	21
547	Thane	Jawhar	Diversion of 445.29 ha. (Previously submitted for 531.186 ha.) of forest land for construction of Deharji Medium Irrigation Project Tal. Vikramgad. District Thane, Maharashtra.	11670/ (40)	MoEF No. 8-10/2009.FC, 42419	445.29	As Per stitupulated condition No.9	Looscbolder Structure						South Jawhar	Jawhar	Kadachimet	260	N 19.863325 E 73.206805	forest land	Tribal
548	Thane	Jawhar						Looscbolder Structure						South Jawhar	Jawhar	Kadachimet	260	N 19.863275 E 73.206832	forest land	Tribal
549	Thane	Jawhar						Looscbolder Structure						South Jawhar	Jawhar	Kadachimet	260	N 19.863142 E 73.206976	forest land	Tribal
550	Thane	Jawhar						Looscbolder Structure						South Jawhar	Jawhar	Kadachimet	260	N 19.863066 E 73.207046	forest land	Tribal
551	Thane	Jawhar						Looscbolder Structure						South Jawhar	Jawhar	Kadachimet	260	N 19.862984 E 73.206998	forest land	Tribal
552	Thane	Jawhar						Looscbolder Structure						South Jawhar	Jawhar	Kadachimet	260	N 19.862568 E 73.207071	forest land	Tribal
553	Thane	Jawhar						Looscbolder Structure						South Jawhar	Jawhar	Kadachimet	260	N 19.862514 E 73.207007	forest land	Tribal
554	Thane	Jawhar						Looscbolder Structure						South Jawhar	Jawhar	Kadachimet	260	N 19.862461 E 73.207091	forest land	Tribal
555	Thane	Jawhar						Looscbolder Structure	0	30	30	0.00	6.77	South Jawhar	Jawhar	Kadachimet	261	N 19.849338 E 73.212997	forest land	Tribal
556	Thane	Jawhar						Looscbolder Structure						South Jawhar	Jawhar	Kadachimet	261	N 19.849454 E 73.213035	forest land	Tribal
557	Thane	Jawhar						Looscbolder Structure						South Jawhar	Jawhar	Kadachimet	261	N 19.849555 E 73.213102	forest land	Tribal
558	Thane	Jawhar						Looscbolder Structure						South Jawhar	Jawhar	Kadachimet	261	N 19.849582 E 73.213103	forest land	Tribal
559	Thane	Jawhar						Looscbolder Structure						South Jawhar	Jawhar	Kadachimet	261	N 19.849728 E 73.213161	forest land	Tribal
560	Thane	Jawhar						Looscbolder Structure						South Jawhar	Jawhar	Kadachimet	261	N 19.849939 E 73.213243	forest land	Tribal
561	Thane	Jawhar						Looscbolder Structure						South Jawhar	Jawhar	Kadachimet	261	N 19.850166 E 73.213316	forest land	Tribal
562	Thane	Jawhar						Looscbolder Structure						South Jawhar	Jawhar	Kadachimet	261	N 19.850247 E 73.213467	forest land	Tribal
563	Thane	Jawhar						Looscbolder Structure						South Jawhar	Jawhar	Kadachimet	261	N 19.850282 E 73.213514	forest land	Tribal
564	Thane	Jawhar						Looscbolder Structure						South Jawhar	Jawhar	Kadachimet	261	N 19.850317 E 73.213566	forest land	Tribal
565	Thane	Jawhar						Looscbolder Structure						South Jawhar	Jawhar	Kadachimet	261	N 19.850321 E 73.213602	forest land	Tribal
566	Thane	Jawhar						Looscbolder Structure						South Jawhar	Jawhar	Kadachimet	261	N 19.850448 E 73.213868	forest land	Tribal

Sr. No.	Circle	Division	Name of the Project	Project ID	Final sanction	Project Area (ha)	Details/ Particulars of work as per stipulated condition			Total Area/Total Quantum of specified work mentioned in col. 11	Total No of sites with respect to column. 12	Rate per unit (Rs.)	Amount (Rs. Lakhs)	Details of Area to be treated						
							Condition no. in the sanction letter	Type of plantation	Year of plantation (i.e. PPO/FYO/ SYO/TYO etc.)					Range	Round	Beat	Compartment no.	Latlong	Wheter forest land or non - forest land	Tribal/remote area or non-tribal area
1	2	3	4	5	6	7	8	9	10	11	12	13	14	15	16	17	18	19	20	21
567	Thane	Jawhar	Diversion of 445.29 ha. (Previously submitted for 531.186 ha.) of forest land for construction of Deharji Medium Irrigation Project Tal. Vikramgad. District Thane, Maharashtra.	11670/ (40)	MoEF No. 8-10/2009.FC, 42419	445.29	As Per stitupulated condition No.9	Looscbolder Structure						South Jawhar	Jawhar	Kadachimet	261	N 19.850457 E 73.213832	forest land	Tribal
568	Thane	Jawhar						Looscbolder Structure						South Jawhar	Jawhar	Kadachimet	261	N 19.850403 E 73.213917	forest land	Tribal
569	Thane	Jawhar						Looscbolder Structure						South Jawhar	Jawhar	Kadachimet	261	N 19.850438 E 73.214071	forest land	Tribal
570	Thane	Jawhar						Looscbolder Structure						South Jawhar	Jawhar	Kadachimet	261	N 19.850471 E 73.214092	forest land	Tribal
571	Thane	Jawhar						Looscbolder Structure						South Jawhar	Jawhar	Kadachimet	261	N 19.850653 E 73.214454	forest land	Tribal
572	Thane	Jawhar						Looscbolder Structure						South Jawhar	Jawhar	Kadachimet	261	N 19.850623 E 73.214436	forest land	Tribal
573	Thane	Jawhar						Looscbolder Structure						South Jawhar	Jawhar	Kadachimet	261	N 19.850686 E 73.214594	forest land	Tribal
574	Thane	Jawhar						Looscbolder Structure						South Jawhar	Jawhar	Kadachimet	261	N 19.850656 E 73.214657	forest land	Tribal
575	Thane	Jawhar						Looscbolder Structure						South Jawhar	Jawhar	Kadachimet	261	N 19.850704 E 73.214639	forest land	Tribal
576	Thane	Jawhar						Looscbolder Structure						South Jawhar	Jawhar	Kadachimet	261	N 19.850745 E 73.214694	forest land	Tribal
577	Thane	Jawhar						Looscbolder Structure						South Jawhar	Jawhar	Kadachimet	261	N 19.850473 E 73.214993	forest land	Tribal
578	Thane	Jawhar						Looscbolder Structure						South Jawhar	Jawhar	Kadachimet	261	N 19.850497 E 73.215071	forest land	Tribal
579	Thane	Jawhar						Looscbolder Structure						South Jawhar	Jawhar	Kadachimet	261	N 19.850475 E 73.215077	forest land	Tribal
580	Thane	Jawhar	Diversion of 0.7662 ha. Of Restored forest land for construction of Industrial building, recreation grounds, common facility centre, internal road etc. om favour of Shri. Ashok Mourya & Suriner Singh sethi in Thane District of Maharashtra					Looscbolder Structure						South Jawhar	Jawhar	Kadachimet	261	N 19.850461 E 73.215105	forest land	Tribal
581	Thane	Jawhar						Looscbolder Structure						South Jawhar	Jawhar	Kadachimet	261	N 19.850596 E 73.215155	forest land	Tribal
582	Thane	Jawhar						Looscbolder Structure						South Jawhar	Jawhar	Kadachimet	261	N 19.850776 E 73.214996	forest land	Tribal
583	Thane	Jawhar						Looscbolder Structure						South Jawhar	Jawhar	Kadachimet	261	N 19.850801 E 73.214998	forest land	Tribal
584	Thane	Jawhar						Looscbolder Structure						South Jawhar	Jawhar	Kadachimet	261	N 19.850867 E 73.214994	forest land	Tribal
585	Thane	Jawhar						Looscbolder Structure	0	50	50	0	11.28	South Jawhar	Pathardi	Wanganpada	262	N 19.835613 E 73.230721	forest land	Tribal

Sr. No.	Circle	Division	Name of the Project	Project ID	Final sanction	Project Area (ha)	Details/ Particulars of work as per stipulated condition			Total Area/Total Quantum of specified work mentioned in col. 11	Total No of sites with respect to column. 12	Rate per unit (Rs.)	Amount (Rs. Lakhs)	Details of Area to be treated						
							Condition no. in the sanction letter	Type of plantation	Year of plantation (i.e. PPO/FYO/ SYO/TYO etc.)					Range	Round	Beat	Compartment no.	Latlong	Wheter forest land or non - forest land	Tribal/remote area or non-tribal area
1	2	3	4	5	6	7	8	9	10	11	12	13	14	15	16	17	18	19	20	21
586	Thane	Jawhar	Diversion of 0.7662 ha. Of Restored forest land for construction of Industrial building, recreation grounds, common facility centre, internal road etc. om favour of Shri. Ashok Mourya & Suriner Singh sethi in Thane District of Maharashtra					Looscbolder Structure						South Jawhar	Pathardi	Wanganpada	262	N 19.83564 E 73.230771	forest land	Tribal
587	Thane	Jawhar						Looscbolder Structure						South Jawhar	Pathardi	Wanganpada	262	N 19.835655 E 73.230755	forest land	Tribal
588	Thane	Jawhar						Looscbolder Structure						South Jawhar	Pathardi	Wanganpada	262	N 19.83555 E 73.23043	forest land	Tribal
589	Thane	Jawhar						Looscbolder Structure						South Jawhar	Pathardi	Wanganpada	262	N 19.835524 E 73.230362	forest land	Tribal
590	Thane	Jawhar						Looscbolder Structure						South Jawhar	Pathardi	Wanganpada	262	N 19.835308 E 73.230189	forest land	Tribal
591	Thane	Jawhar						Looscbolder Structure						South Jawhar	Pathardi	Wanganpada	262	N 19.835121 E 73.230148	forest land	Tribal
592	Thane	Jawhar						Looscbolder Structure						South Jawhar	Pathardi	Wanganpada	262	N 19.83483 E 73.229972	forest land	Tribal
593	Thane	Jawhar						Looscbolder Structure						South Jawhar	Pathardi	Wanganpada	262	N 19.834856 E 73.22174	forest land	Tribal
594	Thane	Jawhar						Looscbolder Structure						South Jawhar	Pathardi	Wanganpada	262	N 19.834747 E 73.229667	forest land	Tribal
595	Thane	Jawhar						Looscbolder Structure						South Jawhar	Pathardi	Wanganpada	262	N 19.834642 E 73.229574	forest land	Tribal
596	Thane	Jawhar						Looscbolder Structure						South Jawhar	Pathardi	Wanganpada	262	N 19.834532 E 73.229306	forest land	Tribal
597	Thane	Jawhar						Looscbolder Structure						South Jawhar	Pathardi	Wanganpada	262	N 19.834355 E 73.229346	forest land	Tribal
598	Thane	Jawhar						Looscbolder Structure						South Jawhar	Pathardi	Wanganpada	262	N 19.834332 E 73.229229	forest land	Tribal
599	Thane	Jawhar						Looscbolder Structure						South Jawhar	Pathardi	Wanganpada	262	N 19.834238 E 73.229068	forest land	Tribal
600	Thane	Jawhar						Looscbolder Structure						South Jawhar	Pathardi	Wanganpada	262	N 19.8342 E 73.226109	forest land	Tribal
601	Thane	Jawhar						Looscbolder Structure						South Jawhar	Pathardi	Wanganpada	262	N 19.834009 E 73.228842	forest land	Tribal
602	Thane	Jawhar						Looscbolder Structure						South Jawhar	Pathardi	Wanganpada	262	N 19.833517 E 73.229203	forest land	Tribal
603	Thane	Jawhar						Looscbolder Structure						South Jawhar	Pathardi	Wanganpada	262	N 19.83352 E 73.229218	forest land	Tribal
604	Thane	Jawhar						Looscbolder Structure						South Jawhar	Pathardi	Wanganpada	262	N 19.833612 E 73.229147	forest land	Tribal
605	Thane	Jawhar						Looscbolder Structure						South Jawhar	Pathardi	Wanganpada	262	N 19.833659 E 73.229053	forest land	Tribal

Sr. No.	Circle	Division	Name of the Project	Project ID	Final sanction	Project Area (ha)	Details/ Particulars of work as per stipulated condition			Total Area/Total Quantum of specified work mentioned in col. 11	Total No of sites with respect to column. 12	Rate per unit (Rs.)	Amount (Rs. Lakhs)	Details of Area to be treated						
							Condition no. in the sanction letter	Type of plantation	Year of plantation (i.e. PPO/FYO/ SYO/TYO etc.)					Range	Round	Beat	Compartment no.	Latlong	Wheter forest land or non - forest land	Tribal/remote area or non-tribal area
1	2	3	4	5	6	7	8	9	10	11	12	13	14	15	16	17	18	19	20	21
606	Thane	Jawhar	Diversion of 0.7662 ha. Of Restored forest land for construction of Industrial building, recreation grounds, common facility centre, internal road etc. om favour of Shri. Ashok Mourya & Suriner Singh sethi in Thane District of Maharashtra					Looscbolder Structure						South Jawhar	Pathardi	Wanganpada	262	N 19.833773 E 73.228978	forest land	Tribal
607	Thane	Jawhar						Looscbolder Structure						South Jawhar	Pathardi	Wanganpada	262	N 19.833821 E 73.228385	forest land	Tribal
608	Thane	Jawhar						Looscbolder Structure						South Jawhar	Pathardi	Wanganpada	262	N 19.833822 E 73.227921	forest land	Tribal
609	Thane	Jawhar						Looscbolder Structure						South Jawhar	Pathardi	Wanganpada	262	N 19.83399 E 73.228489	forest land	Tribal
610	Thane	Jawhar						Looscbolder Structure						South Jawhar	Pathardi	Wanganpada	262	N 19.834058 E 73.228412	forest land	Tribal
611	Thane	Jawhar						Looscbolder Structure						South Jawhar	Pathardi	Wanganpada	262	N 19.834041 E 73.228259	forest land	Tribal
612	Thane	Jawhar						Looscbolder Structure						South Jawhar	Pathardi	Wanganpada	262	N 19.833987 E 73.228176	forest land	Tribal
613	Thane	Jawhar						Looscbolder Structure						South Jawhar	Pathardi	Wanganpada	262	N 19.834103 E 73.228053	forest land	Tribal
614	Thane	Jawhar						Looscbolder Structure						South Jawhar	Pathardi	Wanganpada	262	N 19.834169 E 73.228023	forest land	Tribal
615	Thane	Jawhar						Looscbolder Structure						South Jawhar	Pathardi	Wanganpada	262	N 19.834239 E 73.22799	forest land	Tribal
616	Thane	Jawhar						Looscbolder Structure						South Jawhar	Pathardi	Wanganpada	262	N 19.833816 E 73.228025	forest land	Tribal
617	Thane	Jawhar						Looscbolder Structure						South Jawhar	Pathardi	Wanganpada	262	N 19.833556 E 73.227781	forest land	Tribal
618	Thane	Jawhar						Looscbolder Structure						South Jawhar	Pathardi	Wanganpada	262	N 19.829791 E 73.226399	forest land	Tribal
619	Thane	Jawhar						Looscbolder Structure						South Jawhar	Pathardi	Wanganpada	262	N 19.837646 E 73.225735	forest land	Tribal
620	Thane	Jawhar						Looscbolder Structure						South Jawhar	Pathardi	Wanganpada	262	N 19.828191 E 73.226082	forest land	Tribal
621	Thane	Jawhar						Looscbolder Structure						South Jawhar	Pathardi	Wanganpada	262	N 19.827881 E 73.225945	forest land	Tribal
622	Thane	Jawhar						Looscbolder Structure						South Jawhar	Pathardi	Wanganpada	262	N 19.827646 E 73.225735	forest land	Tribal
623	Thane	Jawhar						Looscbolder Structure						South Jawhar	Pathardi	Wanganpada	262	N 19.827331 E 73.225777	forest land	Tribal
624	Thane	Jawhar						Looscbolder Structure						South Jawhar	Pathardi	Wanganpada	262	N 19.826967 E 73.225783	forest land	Tribal
625	Thane	Jawhar						Looscbolder Structure						South Jawhar	Pathardi	Wanganpada	262	N 19.826145 E 73.22482	forest land	Tribal

Sr. No.	Circle	Division	Name of the Project	Project ID	Final sanction	Project Area (ha)	Details/ Particulars of work as per stipulated condition			Total Area/Total Quantum of specified work mentioned in col. 11	Total No of sites with respect to column. 12	Rate per unit (Rs.)	Amount (Rs. Lakhs)	Details of Area to be treated						
							Condition no. in the sanction letter	Type of plantation	Year of plantation (i.e. PPO/FYO/ SYO/TYO etc.)					Range	Round	Beat	Compartment no.	Latlong	Wheter forest land or non - forest land	Tribal/remote area or non-tribal area
1	2	3	4	5	6	7	8	9	10	11	12	13	14	15	16	17	18	19	20	21
626	Thane	Jawhar	Diversion of 0.7662 ha. Of Restored forest land for construction of Industrial building, recreation grounds, common facility centre, internal road etc. om favour of Shri. Ashok Mourya & Suriner Singh sethi in Thane District of Maharashtra					Looscbolder Structure						South Jawhar	Pathardi	Wanganpada	262	N 19.826536 E 73.22579	forest land	Tribal
627	Thane	Jawhar						Looscbolder Structure						South Jawhar	Pathardi	Wanganpada	262	N 19.826268 E 73.225845	forest land	Tribal
628	Thane	Jawhar						Looscbolder Structure						South Jawhar	Pathardi	Wanganpada	262	N 19.825841 E 73.22564	forest land	Tribal
629	Thane	Jawhar						Looscbolder Structure						South Jawhar	Pathardi	Wanganpada	262	N 19.825879 E 73.225173	forest land	Tribal
630	Thane	Jawhar						Looscbolder Structure						South Jawhar	Pathardi	Wanganpada	262	N 19.825955 E 73.224994	forest land	Tribal
631	Thane	Jawhar						Looscbolder Structure						South Jawhar	Pathardi	Wanganpada	262	N 19.826852 E 73.225782	forest land	Tribal
632	Thane	Jawhar						Looscbolder Structure						South Jawhar	Pathardi	Wanganpada	262	N 19.826414 E 73.224885	forest land	Tribal
633	Thane	Jawhar						Looscbolder Structure						South Jawhar	Pathardi	Wanganpada	262	N 19.826614 E 73.22513	forest land	Tribal
634	Thane	Jawhar						Looscbolder Structure						South Jawhar	Pathardi	Wanganpada	262	N 19.827043 E 73.22511	forest land	Tribal
			Total							**250**	**250**		**56.38**							
			Total Looscbolder Structure							**500**	**500**		**112.77**							
			Total for Jawhar division							**724.00**	**606**		**808.10**							
			Grand total of Thane circle							**1345**	**634**		**881.25**							
1	Yavatmal	PKD	Ghonsa Open Cast	-		24.00	XIV	Catchment area Treatment Plan	4th YO	16.50	1	18499	**3.05**	Wani	Sukanegaon	Sukanegaon	6	19.95852 78.88247	Forest Land	Non Trible
			Grand total of Yavatmal circle							**16.50**	**1**		**3.05**							
			Grand Total of CAT Plan Works							**4717.05**	**707**		**1447.47**							

Annexure – V

(Integrated Wildlife Management Plan)

ANNUAL PLAN OF OPERATIONS 2022-23 FOR WORKS UNDER CAMPA

Annexure -V -------- FOR WORKS TO BE TAKEN UNDER INTEGRATED WILDLIFE MANAGEMENT PLAN

Sr. No.	Circle	Division	Name of the Project	Project ID	Final sanction	Project Area (ha)	Details/ Particulars of work as per stipulated condition		Total Area/Total Quantum of specified work mentioned in col. 11	Total No of sites with respect to column. 12	Rate per unit (Rs.)	Amount (Rs. Lakhs)	Details of Area to be treated						
							Condition no. in the sanction letter	Particulars of works					Range	Round	Beat	Compartment no.	Latlong	Wheter forest land or non - forest land	Tribal/remote area or non-tribal area
1	2	3	4	5	6	7	8	9	10	11	12	13	14	15	16	17	18	19	20
1	Nagpur	Nagpur	M/s Solar India Limited at Chakdoh, Taluka -Katol, Disc. Nagpur, MS	FP/MII/IND/1470/2013	GOIF.No.8-23/2017-FC43605	87.97	Governmant of India F.No.8-23/2017-FC	1. Wildlilife Management including Habitat Devlopment Work 2. Protection 3. Livelihood and JFM 4. Wildlife Rescue 5. Inner road repairs 6. Repairing of quarters in Kairi Nursury	First Year Works	1	-	60.50	Kondhali Kalmeshwar	Ahmadnagar Chameli Chameli Chameli Chameli Chameli Chameli Dorali endhepathar	Murti Kundi Chamli Kundi Kundi Kundi Nimji Linga Satnaori Bazxargaon Dhankund Linga Dhankund Bazargaon Satnaori Khairy	63 RF 28 RF 25 RF 28 RF 28 RF 28 RF 6 RF 7RF 191 RF 9 RF 192 RF 144 RF 12 RF719 RF A NRF 8 RF & 9RF 6 RF & 7 RF 192 RF144 RF 11 RF	N 21.940 E 78.3329 N 21.829 E 78.4333 N 31.10.22 E 78.423 N 21.829 E 78.4333 N 21.829 E 78.4333 N 21.829 E 78.4333 N 21.829 E 78.4333 N 21.09.54.39 E 078.48.18.15 N 21.09.54.39 E 078.48.18.15	Forest Land	Non-Tribal
2	Nagpur	Nagpur							Second Year Works	1	-	21.00		Kalmeshwar Bazargaon Kalmeshwar Bazargaon Bazargaon					
3	Nagpur	Nagpur							Third Year Operation	1	-	18.50		Bazargaon					
	Total of Nagpur Circle									**3**		**100.00**							
	Grand Total of IWMP Works									**3**		**100.00**							

Annexure – V

(Integrated Wildlife Management Plan)

ANNUAL PLAN OF OPERATIONS 2022-23 FOR WORKS UNDER CAMPA

Annexure -V -------- FOR WORKS TO BE TAKEN UNDER INTEGRATED WILDLIFE MANAGEMENT PLAN

Sr. No.	Circle	Division	Name of the Project	Project ID	Final sanction	Project Area (ha)	Details/ Particulars of work as per stipulated condition		Total Area/Total Quantum of specified work mentioned in col. 11	Total No of sites with respect to column. 12	Rate per unit (Rs.)	Amount (Rs. Lakhs)	Details of Area to be treated						
							Condition no. in the sanction letter	Particulars of works					Range	Round	Beat	Compartment no.	Latlong	Wheter forest land or non - forest land	Tribal/remote area or non-tribal area
1	2	3	4	5	6	7	8	9	10	11	12	13	14	15	16	17	18	19	20
1	Nagpur	Nagpur	M/s Solar India Limited at Chakdoh, Taluka -Katol, Disc. Nagpur, MS	FP/MII/IND/1470/2013	GOIF.No.8-23/2017-FC43605	87.97	Governmant of India F.No.8-23/2017-FC	1. Wildlilife Management including Habitat Devlopment Work 2. Protection 3. Livelihood and JFM 4. Wildlife Rescue 5. Inner road repairs 6. Repairing of quarters in Kairi Nursury	First Year Works	1	-	60.50	Kondhali Kalmeshwar	Ahmadnagar Chameli Chameli Chameli Chameli Chameli Chameli Dorali endhepathar	Murti Kundi Chamli Kundi Kundi Kundi Nimji Linga Satnaori Bazxargaon Dhankund Linga Dhankund Bazargaon Satnaori Khairy	63 RF 28 RF 25 RF 28 RF 28 RF 28 RF 6 RF 7RF 191 RF 9 RF 192 RF 144 RF 12 RF719 RF A NRF 8 RF & 9RF 6 RF & 7 RF 192 RF144 RF 11 RF	N 21.940 E 78.3329 N 21.829 E 78.4333 N 31.10.22 E 78.423 N 21.829 E 78.4333 N 21.829 E 78.4333 N 21.829 E 78.4333 N 21.829 E 78.4333 N 21.09.54.39 E 078.48.18.15 N 21.09.54.39 E 078.48.18.15	Forest Land	Non-Tribal
2	Nagpur	Nagpur							Second Year Works	1	-	21.00		Kalmeshwar Bazargaon Kalmeshwar Bazargaon Bazargaon					
3	Nagpur	Nagpur							Third Year Operation	1	-	18.50		Bazargaon					
	Total of Nagpur Circle									**3**		**100.00**							
	Grand Total of IWMP Works									**3**		**100.00**							

Annexure – VI – A
(Conditional Works-Plantation)

ANNUAL PLAN OF OPERATIONS 2022-23 FOR WORKS UNDER CAMPA

Annexure - VI A ---------- FOR PLANTATIONS TO TAKEN UNDER CONDITIONAL WORKS

Sr. No.	Circle	Division	Name of the Project	Project ID	Final sanction	Project Area (ha)	Details/ Particulars of work as per stipulated condition			Total Area/Total Quantum of specified work mentioned in col. 11	Total No of sites with respect to column. 12	Rate per unit (Rs.)	Amount (Rs. Lakhs)	Details of Area to be treated						
							Condition no. in the sanction letter	Type of plantation	Year of plantation (i.e. PPO/FYO/SYO/TYO etc.)					Range	Round	Beat	Compartment no.	Longitute	Wheter forest land or non - forest land	Tribal/remote area or non-tribal area
1	2	3	4	5	6	7	8	9	10	11	12	13	14	15	16	17	18	19	20	21
1	Aurangabad	Aurangabad	132 KV Savangi-Khultabad Transmission line	12081	Regional Office, Western Region, Bhopal 6-MHC017/2013-BHO/02612.1.2015	11.502	10	Meditional plantation. 625 plants	6 th yr.	1.000	1	16466	**0.17**	Kbad	Khultabad	Bhatji	189/32	N19.988839 E 75.247946	Forest land	Non tribal
2	Aurangabad	Aurangabad	132 KV Sillod-Soegaon transmission line at Village Vetalwadi	12016	Regional office, Bhopal6-MHB-089/2011-BHO/335 40966	3.146	4		8 th yr.	2.200	1	16499	**0.35**	Aurangabad	Adul	Adul	316	N19.41.12 E75.30.57	Forest land	Non Tribal
			Grand total of Aurangabad circle			**14.648**	**14.000**			**3.200**	**2**	**16499**	**0.52**							
1	Chandrapur	Bramhapuri	800 KV HVDC Raigarh (Chhatisgarh) to Pugalur (Tamilnadu) Transmission Line	12160	MoEFFC-III/ MH-30/2018-NGP/41985/09/2018	46.229	xxiii(d)		PPO Work	7.250	25	154759	**11.22**	South Bramhapuri	Awalgaon, Bhuj	Awalgaon, Padmapur, Halda, Bodegaon	1144,1145, 1146,1138, 1168,1165, ११६७,1189, 1172	N20 25 00.4 E079 56 12.1 N20 25 14.2 E079 55 13.1 N20 24 15.6 E079 54 16.1 N20 23 38.2 E079 56 26.6 N20 22 23.5 E079 55 30.8 N20 20 00.3 N20 19 43.5 E079 55 23.3 N20 18 34.67 E079 55 18.67 N20 19 28.2 E079 55 24.4	Forest Land	Non-Tribal Area
2	Chandrapur	Bramhapuri															775	N20 21 27.86 E079 52 53.60		
3	Chandrapur	Bramhapuri															751	N20 20 41.0 E079 56 25.9		
4	Chandrapur	Bramhapuri															765	N20 21 06.9 E079 52 19.8		
5	Chandrapur	Bramhapuri															207	N20 18 22 59 E079 55 02.8		
			Total			**46.2291**				**7.250**	**25**		**11.22**							

Sr. No.	Circle	Division	Name of the Project	Project ID	Final sanction	Project Area (ha)	Details/ Particulars of work as per stipulated condition			Total Area/Total Quantum of specified work mentioned in col. 11	Total No of sites with respect to column. 12	Rate per unit (Rs.)	Amount (Rs. Lakhs)	Details of Area to be treated						
							Condition no. in the sanction letter	Type of plantation	Year of plantation (i.e. PPO/FYO/SYO/TYO etc.)					Range	Round	Beat	Compartment no.	Longitute	Wheter forest land or non - forest land	Tribal/remote area or non-tribal area
1	2	3	4	5	6	7	8	9	10	11	12	13	14	15	16	17	18	19	20	21
6	Chandrapur	Bramhapuri	765 KV DC Rajandgaon to Warora Tansmission Line	12558	MoEFFC-III/MH-26/2018-NGP/344526/03/2018	44.4817	xxvi (d)		PPO Work	4.321	30	154825	**6.69**	Chimur	Khadsangi, Chimur, Bhisi, Shankarpur	Amdi, Khadsangi, Zari, Chimur, Gadgaon, Gadpipari, Doma, Shankarpur	122, 114, 145, 106, 167, 105, 48, 21, 15, 27, 370, 368, 15, 47, 120, ,128, 124, 157, 155, 153, 144, 370/1, 370/2, 376	N20 30 39.9 N20 32 17.8 N20 30 35.4 N20 30 07	Forest Land	Non-Tribal Area
7	Chandrapur	Bramhapuri								2.397	26	154777	**3.71**	Nagbhid	Dongergaon, Mindhala	Rengatur, Mangli, Mhasli	276, 237, 67, 63, 117, 44, 45/1, 45/2, 86. 625. 105, 630, 211, 74, 776, 237, 184, 6, 47, 48, 65, 66	N20 25 14.2 E079 55 13.1	Forest Land	Non-Tribal Area
8	Chandrapur	Bramhapuri								0.170	2	158824	**0.27**	North Bramhapuri	Bramhapuri	Torgaon	407, 259	N20 24 15.6 E079 54 16.1	Forest Land	Non-Tribal Area
			Total			**44.4817**				**6.889**	**58**		**10.67**							
9	Chandrapur	Bramhapuri	132 KV DC Transmission Line from Bramhapuri Sub station to Nagbhid railway traction sub station	12500	MoEFFC-I/MH-74/2017-NGP/188943014	1.134	xx (d)		FYO Work	0.126	2	158730	**0.20**	North Bramhapuri	Bramhapuri	Bramhapuri, Saigata	498, 247	N20 23 38.2 E079 56 26.6	Forest Land	Non-Tribal Area
			Total			**1.134**				**0.126**	**2**		**0.20**							
			Total			**91.8448**				**14.265**	**85**		**22.09**							

Sr. No.	Circle	Division	Name of the Project	Project ID	Final sanction	Project Area (ha)	Details/ Particulars of work as per stipulated condition			Total Area/Total Quantum of specified work mentioned in col. 11	Total No of sites with respect to column. 12	Rate per unit (Rs.)	Amount (Rs. Lakhs)	Details of Area to be treated						
							Condition no. in the sanction letter	Type of plantation	Year of plantation (i.e. PPO/FYO/SYO/TYO etc.)					Range	Round	Beat	Compartment no.	Longitute	Wheter forest land or non - forest land	Tribal/remote area or non-tribal area
1	2	3	4	5	6	7	8	9	10	11	12	13	14	15	16	17	18	19	20	21
10	Chandrapur	Bramhapuri	132 KV DC Sindewahi Substation to Bramhapuri Substation Transmission Line	12494	MoEFFC-II/MH-70/2017-NGP/ 453026/10/2018	22.7745			SYO Work	0.540	1	51823	**0.28**	Sindewahi	Sindewahi	Dongergaon, Sindewahi	1267, 1268, 1351, 1353	N 20 21 0.292 E079 38 0.798	Forest Land	Non-Tribal Area
11	Chandrapur	Bramhapuri								0.320	1	53125	**0.17**	Talodhi	Talodhi	Talodhi	541	N 20 24 24.00 E079 37 55.00	Forest Land	Non-Tribal Area
12	Chandrapur	Bramhapuri								1.789	1	53661	**0.96**	Nagbhid	Nagbhid, Mindhala	Nagbhid, Huma, Mindhala, Kosambi Gawali	662, 644, 638, 87, 635, 634, 764	N 20 33 04.3 E 079 43 59.8	Forest Land	Non-Tribal Area
13	Chandrapur	Bramhapuri								1.568	1	52927	**0.83**	North Bramhapuri	Bramhapuri	Bhagwanpur, Bramhapuri	897, 903, 904, 865, 864, 862	N 20 34 29.00 E 079 46 34.2	Forest Land	Non-Tribal Area
			Total							**4.218**	**4**		**2.24**							
			Grand total of Chandrapur circle			**91.84**				**18.482**	**89**		**24.33**							
1	Dhule	Dhule	Diversion of 119.689 ha. Of Reserved Forest Land in favor of Khargone Transmission ltd Sanawad (MP) for construction of 765 D/C Hexa Khandwa-Dhule Transmission line in Dhule district in State of Maharashtra		FC-III/ MH-24/2017-NGP/7305 Dt. 7.10.20207.10.2020	119.689	7.10.2020	Medicinal Plantation PPO	PPO	17.000	1	44477	**28.39**	Sangvi	Palasner	Bijasani	754	N21.56111 E75.05319	Forest Land	Trible
	Dhule	Dhule	Divertion of 3.246 ha. Forest land for 132 KV EHV D/C line at Mhasale Tal. Sakri, Dist Dhule	12474 (28)	MoEFF.No.fc-i/mh-58/2016-ngp/1920 13.07.2016	3.246	19(d)	Medicinal Plantation	4th YO	2.110	1	15390	**0.35**	Sakri	Mhasale	Mhasale	Mhasale 420	N 21 .05 210 E 074.20 046	Forest Land	Non Trible

Sr. No.	Circle	Division	Name of the Project	Project ID	Final sanction	Project Area (ha)	Details/ Particulars of work as per stipulated condition			Total Area/Total Quantum of specified work mentioned in col. 11	Total No of sites with respect to column. 12	Rate per unit (Rs.)	Amount (Rs. Lakhs)	Details of Area to be treated						
							Condition no. in the sanction letter	Type of plantation	Year of plantation (i.e. PPO/FYO/SYO/TYO etc.)					Range	Round	Beat	Compartment no.	Longitute	Wheter forest land or non - forest land	Tribal/remote area or non-tribal area
1	2	3	4	5	6	7	8	9	10	11	12	13	14	15	16	17	18	19	20	21
2	Dhule	Dhule	Divertion of 1.978 ha. Of Reserved Forest land for 400 KV EHV D/C line Dhule- Dhule transmission line in Dhule Dist	11609 (40)	MoEFF.No.6/MHB-18/2014-BHO/127525.01.2017	1.978	XX(d)	Medicinal Plantation	4th YO	1.978	1	15390	**0.33**	Shindkheda	Songir	Songir	Songir G.No273 Biladi & 39 Kundane	N 20.56177 E 74.48770	Forest Land	Non Trible
			Total			**5.224**				**4.088**	**2**		**0.68**							
			Grand total of Dhule circle			**124.91**				**21.088**	**3**		**29.07**							
1	Gadchiroli	Wadsa	Diversion of 27.325 ha. Of forest land for construction & Operation of 765 KV DC Raipur pulling Station (Chatisgarh) Wardha Transmission line in Gadchiroli, Chandrapur, Gondia Distt. In fovour of power Grid Corporation	12360	GOIF No 8-92/2014 FC07.12.15	765 KV DC Raipur Pooling Station (Chattisgarh)wardha (Maharashtra Transmission Line- II overan area of 295.425 ha (Wadsa DN. 253.729 ha)	27 d	Plantation of Dwrf species (Preferably Medicinal Plant)	SYO	4.500	1	103758	**1.11**	Bedgaon	Korchi	Korchi	487	N 20°41'19" E80°26'17"	Forest land	Tribal
	Gadchiroli	Wadsa							SYO	5.890	1	103758	**1.11**	Bedgaon	Bedgaon	Bedgaon	486	N20°41'12" E80°25'58"	Forest land	Tribal
	Gadchiroli	Wadsa							SYO	7.500	1	103758	**1.11**	Bedgaon	Bedgaon	Kalapani	461	N20°38'50" E80°23'17"	Forest land	Tribal
	Gadchiroli	Wadsa							SYO	4.900	1	103758	**1.11**	Bedgaon	Betkathi	Bhimpur	560	N 20°44'57" E80°29'50"	Forest land	Tribal
	Gadchiroli	Wadsa							SYO	7.000	1	103758	**1.11**	Bedgaon	Korchi	Laxmipur	463	N 20°40'49" E80°23'11"	Forest land	Tribal
	Gadchiroli	Wadsa							SYO	2.210	1	103758	**1.11**	Wadsa	Wadsa	Ekalpur	97	N 20°38'42" E 79°59'10"	Forest land	Tribal
	Gadchiroli	Wadsa							SYO	2.000	1	103758	**1.11**	Kurkheda	Charbhatti	Charbhatti	224	N20 39.755 E80 20.420	Forest land	Tribal
	Gadchiroli	Wadsa							SYO	4.000	1	103758	**1.11**	Kurkheda	khedegaon	khedegaon	106/146	N20 39.481 E80 07.046	Forest land	Tribal
	Gadchiroli	Wadsa							SYO	2.000	1	103758	**1.11**	Kurkheda	khairitola	khairitola	138	N20 39.418 E80 08.709	Forest land	Tribal
			Total							**40.000**	**9**		**9.99**							

Sr. No.	Circle	Division	Name of the Project	Project ID	Final sanction	Project Area (ha)	Details/ Particulars of work as per stipulated condition			Total Area/Total Quantum of specified work mentioned in col. 11	Total No of sites with respect to column. 12	Rate per unit (Rs.)	Amount (Rs. Lakhs)	Details of Area to be treated						
							Condition no. in the sanction letter	Type of plantation	Year of plantation (i.e. PPO/FYO/SYO/TYO etc.)					Range	Round	Beat	Compartment no.	Longitute	Wheter forest land or non - forest land	Tribal/remote area or non-tribal area
1	2	3	4	5	6	7	8	9	10	11	12	13	14	15	16	17	18	19	20	21
2	Gadchiroli	Wadsa	Diversion of 27.325 ha. Of forest land for construction & Operation of 765 KV DC Raipur pulling Station (Chatisgarh) Wardha Transmission line in Gadchiroli, Chandrapur, Gondia Distt. In fovour of power Grid Corporation	12244	GOIF No 8-80/201314 FC21.04.14	272.325 in 3 Dn Out of which Wadsa 249.437	13 d	Plantation of Dwrf species (Preferably Medicinal Plant)	6th Yo	1.120	1	150322	**1.46**	Bedgaon	Bedgaon	Bedgaon	485	N 20°40'5" E80°25'55"	Forest land	Tribal
	Gadchiroli	Wadsa							6th Yo	1.380	1	150322	**1.80**	Bedgaon	Bedgaon	Bedgaon	484	N 20°39'53" E 80°25'42"	Forest land	Tribal
	Gadchiroli	Wadsa							6th Yo	2.370	1	150322	**3.09**	Bedgaon	Bedgaon	Bedgaon	460	N 20.646 E 80.387	Forest land	Tribal
	Gadchiroli	Wadsa							6th Yo	1.730	1	150322	**2.26**	Bedgaon	Bedgaon	Bedgaon	461	20°37'36" 80°20'50"	Forest land	Tribal
	Gadchiroli	Wadsa							6th Yo	1.510	1	150322	**1.97**	Purada	Purada	Dongargaon	238	N-20.38.47 E 80.22.58	Forest land	Tribal
	Gadchiroli	Wadsa							6th Yo	1.520	1	150322	**1.98**	Kurkheda	Gewardha	Gewardha	129	N20 36.839 E80 06.922	Forest land	Tribal
	Gadchiroli	Wadsa							6th Yo	1.540	1	150322	**2.01**	Wadsa	Vihirgaon	Vihirgaon	118	N20°36'24" E 80°05'44"	Forest land	Tribal
			Total							**11.170**	**7**		**14.56**							
			Grand total of Gadchiroli circle							**51.170**	**16**		**24.55**							
1	Nagpur	Nagpur	Up-gradation of Nagpur-Katol National Highway NH-353J from existing KM 13.000 (Outer ring road, Nagpur to 62.900 (Katol Bypass) In f/o Project Director, PIU-2, NHAI, Nagpur. FP/MH/ROAD/37601/2018	37601	GOIFC-II/MH-143/2021-NGP/872030.09.2021	14.0718	(xiv)	Boundary of the diverted forest land by erectimg four high reinforced cement concrete pillars	PPO	Class-1 Pillar Quantity 60	0	0	**3.73**	Area Statement enclosed					Forest Land	Non trible
2	Nagpur	Nagpur																		
3	Nagpur	Nagpur																		
4	Nagpur	Nagpur																		
5	Nagpur	Nagpur																		

Sr. No.	Circle	Division	Name of the Project	Project ID	Final sanction	Project Area (ha)	Details/ Particulars of work as per stipulated condition			Total Area/Total Quantum of specified work mentioned in col. 11	Total No of sites with respect to column. 12	Rate per unit (Rs.)	Amount (Rs. Lakhs)	Details of Area to be treated						
							Condition no. in the sanction letter	Type of plantation	Year of plantation (i.e. PPO/FYO/SYO/TYO etc.)					Range	Round	Beat	Compartment no.	Longitute	Wheter forest land or non - forest land	Tribal/remote area or non-tribal area
1	2	3	4	5	6	7	8	9	10	11	12	13	14	15	16	17	18	19	20	21
6	Nagpur	Nagpur	400KV D/C Mouda – Baitul T/L.	12415	GOIFC-I/ MH-16/ 2015-NGP/ 177815/05/ 2017	1.705	(xviii) (d)	Creation and maintenance of plantation of dwarf species (Preferably medicinal plants) in RoW under T/L.	SYO (model No.4)	1.445	1	48445	**0.70**	Parseoni	Parseoni	Bhagimahari	Pipla Sur. No. 9, Tal. Ramtek		Z.J.	non-tribal area.
7	Nagpur	Nagpur												Ramtek	Patgowari	Patgowari	Mehandi Sur.No. 4, Tal.Ramtek		Z.J.	non-tribal area.
8	Nagpur	Nagpur	765KV Raipur pooling station – Wardha T/L-2. Power Grid (I) Ltd.	12360	GOI8-92/2014-FC 42345	11.57	(xxi)(d)	Creation and maintenance of plantation of dwarf species (Preferably medicinal plants) in right of way under T/L.	5TH YEAR Plantation (model No.3)	1.727	1	15952	**0.28**	South Umred	Zamkoli	Sirsi, Mahalgaon	PF Comptt. No. 366 & 390 and FDCM Compt. no. 391, 378, 380 & 379.	N 20 38 58 .00 E 079 12 04 80	Forest land	non- tribal area.
9	Nagpur	Nagpur	400 KV D/C Mauda-Wardha T/L.in favour of Power Grid (I) Ltd, Bhadrawati Dist. Chandrapur	12041	GOI6-MHC083/ 2011-BHO/ 323 23.02.2012	13.6804	4	Medicinal Plantation	6thYO Plantation (model No.3)	1.800	1	15952	**0.29**	South Umred	Umred	Mangrul	356RF	N 20 45 16 .24 E 079 19 51 36	Forest land	Non-Tribal
			Total of Nagpur Division			**26.95**				**3.172**	**3**		**4.99**							
10	Nagpur	Gondia	Diversion of 16.6226 ha forest land for 765 KV Raipur Pooling Station Wardha	12244	G.O.IF.No.8-80/2013-FC21.04. 2014	16.623	(xiii) (d)	Medicinal Plantation	6th YO	1.000	1	10093	**0.10**	Gondia	Gothangaon	in Right of Way under the Transmission Line		N-20.40.555, E-80.14.173	forest land	Tribal
11	Nagpur	Gondia	Diversion of 19.6702 ha zudapi forest land for laying 765 KV SC Tiroda to Koradi Transmission Line	12243	G.O.IF.No.6 MHC 066/2013/BHO/1045 20.05. 2014	2.49	7	Medicinal Plantation	6th YO	2.486	1	9633	**0.24**	Gondia	Tiroda			N-21.16.225, E-79.51.354	forest land	Non-Tribal
			Total			**2.49**				**3.486**	**2**		**0.34**							

Sr. No.	Circle	Division	Name of the Project	Project ID	Final sanction	Project Area (ha)	Details/ Particulars of work as per stipulated condition			Total Area/Total Quantum of specified work mentioned in col. 11	Total No of sites with respect to column. 12	Rate per unit (Rs.)	Amount (Rs. Lakhs)	Details of Area to be treated						
							Condition no. in the sanction letter	Type of plantation	Year of plantation (i.e. PPO/FYO/SYO/TYO etc.)					Range	Round	Beat	Compartment no.	Longitute	Wheter forest land or non - forest land	Tribal/remote area or non-tribal area
1	2	3	4	5	6	7	8	9	10	11	12	13	14	15	16	17	18	19	20	21
12	Nagpur	Gondia	Power Grid 400 KV Raypur Wardh Transmision Line	11920	G.O.IF.No8-57/2011 FC17.09. 2012	100.91	3 in Principle approved letter dt.30.04. 2012	Medical Plantation	7th YO	22.000	1	10093	**2.22**	Salekasa	Salekasa	Kawarabandh	116, 27, 128, 129	N-21.22.445, E-80.25.623	forest land	Tribal
13	Nagpur	Gondia						Medical Plantation	7th YO	18.000	1	10093	**1.82**	Salekasa	Salekasa	Salekasa	374,384, 385, 386, 387 388	N-21.18.650, E-80.30.938	forest land	Tribal
14	Nagpur	Gondia						Medical Plantation	7th YO	15.000	1	10093	**1.51**	N/Deori	Deori	Deori	1679	N-21.02.964, E-80.22.733	forest land	Tribal
15	Nagpur	Gondia						Medical Plantation	7th YO	5.000	1	10093	**0.50**	N/Deori	Deori	Borgaon	225	N-21.01.060, E-80.23.923,	forest land	Tribal
16	Nagpur	Gondia						Medical Plantation	7th YO	40.970	1	10093	**4.13**	Arjuni/Mor	Wadegaon	Itkheda	1082	N-25.45.673, E-80.00.375	forest land	Tribal
17	Nagpur	Gondia	400KV Tirora Varora Transmission Line	12047	G.O.I6MHC005/2012-BHO/ 103022/6/2012	9.617	4	Medical Plantation	7th YO	18.000	1	9633	**1.73**	Gondia	Gondia	109/1, 109/2		N-21.29.196, E-80.10.335	forest land	Non-Tribal
18	Nagpur	Gondia	765 KV Tirora Koradi Transmission Line	12176	G.O.I6MHC021/2013-BHO/ 139430/08/2013	3.8768	6	Medical Plantation	7th YO Plantation under Micro watershed development activities 2016-17	12.000	1	9633	**1.16**	Tiroda	Wadegaon	Lohara	349,350 351,95,347	N-21.16.765, E-79.51.213	forest land	Non-Tribal
19	Nagpur	Gondia					7	Mix Plantation		10.000	1	9633	**0.96**	Tiroda	Tiroda	Belati	21/7,21/8,21/9	N-21.25.355, E-79.54.841	forest land	Non-Tribal
20	Nagpur	Gondia						Mix Plantation		5.500	1	9633	**0.53**	Tiroda	Tiroda	Kairbodi	821822	N-21.26.025, E-79.57.520	forest land	Non-Tribal
21	Nagpur	Gondia						Fodder Plantation		5.000	1	9633	**0.48**	Tiroda	Tiroda	Belati	2./1	N-21.25.727, E-79.54.781	forest land	Non-Tribal
22	Nagpur	Gondia						Fodder Plantation		5.000	1	9633	**0.48**	Tiroda	Tiroda	Kairbodi	820	N-21.26.163, E-79.57.418	forest land	Non-Tribal
			Total			**114.40**				**156.470**	**11**		**15.54**							
			Total of Gondia Division			**116.89**				**159.956**	**13**		**15.88**							
23	Nagpur	Wardha	Laying of 400 kv. D/c T/L from Warora to Wardha	12112	G.O.I6-MHB-179/2012-BHO-184507.11.2013	3.18	Plantation works	6th	Plantation	2.500	**1**	26887	**0.67**	Wardha	Pulgaon	Pulgaon	Survey No 128	N-20.74242 E-78.33541	Forest Land	NT
			Total of Wardha Division			**3.18**				**2.500**	**1**		**0.67**							
			Grand total of Nagpur circle			**147.02**				**165.628**	**17**		**21.54**							

Sr. No.	Circle	Division	Name of the Project	Project ID	Final sanction	Project Area (ha)	Details/ Particulars of work as per stipulated condition			Total Area/Total Quantum of specified work mentioned in col. 11	Total No of sites with respect to column. 12	Rate per unit (Rs.)	Amount (Rs. Lakhs)	Details of Area to be treated						
							Condition no. in the sanction letter	Type of plantation	Year of plantation (i.e. PPO/FYO/SYO/TYO etc.)					Range	Round	Beat	Compartment no.	Longitute	Wheter forest land or non - forest land	Tribal/remote area or non-tribal area
1	2	3	4	5	6	7	8	9	10	11	12	13	14	15	16	17	18	19	20	21
1	Nashik	East Nashik	Daraswadi feeder canal	11560	MoEF6-MHC 021/2010-BHO/29113.02.2013	263.195	7.00	Canal side plantation	8th year	0.75 Km	2	19760	**0.15**	yeola	Manmad	Ankai	552	20.18919 74.44219	forest land	Non tribal
2	Nashik	East Nashik								1.5 Km		19759	**0.30**	yeola	Rajapur	yeola	191 192 200	20.04363 74.48318	forest land	Non tribal
			Total of East Nashik Division			**263.195**				**2.25 km**	**2**		**0.44**							
3	Nashik	Ahmednagar	Constructiion of 765 Kv D/C (hexa) Aurangabad-padghe Transmission line	1392	Govt. of India Site of NagpurFC-III/MH-05/2015 NGP-80442605	145.795	FC-III/MH-05/2015 NGP-135 Dt 23/08/2016	Meditional Plant	5th year	0.360	5	16075	**0.06**	Rahuri	Kanadgaon	Kanadgaon	243	19.275362 74.263918	Forest land	Non Tribal Area
4	Nashik	Ahmednagar								0.050		16075	**0.01**				245	9.270231 74.264353		
5	Nashik	Ahmednagar								0.160		16075	**0.03**	Takali dhokeshwar	Pokhari	Pokhari	324	19.182066 74.191222		
6	Nashik	Ahmednagar								0.530		16075	**0.09**				325	19.154680 74.172941		
7	Nashik	Ahmednagar								0.790		16075	**0.14**				330	19.145407 74.111339		
			Total of Ahmednagar Division			**145.795**				**1.890**	**5**		**0.33**							
8	Nashik	Sangamner	765 KV DC Aurangabad to padgha Transmission line	12392	GOINo. D-17/NC/II/ID.12392/(57)/ 1835/ 17-1831/10/2017	254.465	17D	Medicinal plants will be done below the Transmission line 1.41	4rd year	2.87 ha. (Workable Area 2.487)	4	15390	**0.05**	Sangamner II	Warwandi	khambe	239, 116/3	N 19 2516.39 E 7424 04.02	Forest Land	Non Tribal area
9	Nashik	Sangamner										15390	**0.04**	Sangamner II	Warwandi	warwandi	238, 204/17,204/18	N 19 2405.33 E 74 22 51.41	Forest Land	Non Tribal area
10	Nashik	Sangamner										15390	**0.18**	Sangamner II	Warwandi	kauthe malkapur	235, 17	N 19 2344.86 E 74 21 54.92	Forest Land	Non Tribal area
11	Nashik	Sangamner										15390	**0.14**	Sangamner I	Ghargaon	Bota	195 ,194 185, 312	N 19 1702.43 E 74 08 36.29	Forest Land	Non Tribal area
			Total			**254.465**				**2.487**	**4**		**0.41**							
12	Nashik	Sangamner	132 KV DC Alephata Ghargaon Transmission line	12190	GOIFNo6MHB-10/201-BHO/ 343921.03.2018	1.404	10a	Medicinal plants will be done below the transmission line 1.40	4rd year	1.404 ha.	3	15390	**0.15**	Sangamner I	Ghargaon	Bota	194pt	N 19 17 02.43 E 74 08 36.29	Forest Land	Non Tribal area
13	Nashik	Sangamner										15390	**0.06**	Sangamner I	Ghargaon	Nandur khandar mal	228pt	N 19 17 40.87 E 74 13 03.37	Forest Land	Non Tribal area
14	Nashik	Sangamner										15390	**0.02**	Sangamner I	Chandanapuri l	Chandan apuri	226pt	N 19 22 31.66 E 74 12 46.76	Forest Land	Non Tribal area
			Total			**1.404**					**3**		**0.23**							
			Total of Sanagamner Division			**255.869**					**7**		**0.64**							
			Grand total of Nashik circle			**664.859**					**14**		**1.41**							

Sr. No.	Circle	Division	Name of the Project	Project ID	Final sanction	Project Area (ha)	Details/ Particulars of work as per stipulated condition			Total Area/Total Quantum of specified work mentioned in col. 11	Total No of sites with respect to column. 12	Rate per unit (Rs.)	Amount (Rs. Lakhs)	Details of Area to be treated						
							Condition no. in the sanction letter	Type of plantation	Year of plantation (i.e. PPO/FYO/SYO/TYO etc.)					Range	Round	Beat	Compartment no.	Longitute	Wheter forest land or non - forest land	Tribal/remote area or non-tribal area
1	2	3	4	5	6	7	8	9	10	11	12	13	14	15	16	17	18	19	20	21
1	Thane	Thane	Diversion of 145.795 ha. of forest land in favour of power Grid corporation of india limited for construction of 765 (hexa) Aurangabad-Padghe Transmission line passing through Ahmednagar, pune and Thane disritcts in the state of Maharashtra	12392	MoEFF.No.FC-III/MH-05/2015-NGP8/23/2016	9.0	As per stipulatedcondition No. 9 a) & b)	Old 3 (Plant Per ha.1111)	5 th year (Medical plants)	10.000	1	16130	1.73	Tokawada (S)	Moroshi, Pendhari, Tokawade,	Bhorande, Divanpada, Vaishakhare, Tokawada	289,18,54A,43,1100,1073,1079 Forest Land	N19 18.724 E73 40.660	Forest land	Tribal
								Old 3 (Plant Per ha.1111)		5.000	1	16130	0.86					N19 16.757 E73 40.048		
								5 (Plant Per ha.625)		10.000	1	16130	1.73	Tokawada (N)	Tokwade	Tokwade	Hedwali S.No.145,52,53	N-19. 32146, E-73.65125	Forest land	Tribal
								Old 3 (Plant Per ha.1111)		3.000	1	16130	0.52	Murbad (E)	Saralgaon	Balegaon	S.No.258	N 19 .309499 E 73.580555	Forest land	Tribal
								Old 3 (Plant Per ha.1111)		7.000	1	15390	1.15	Kalyan	Khadavali	Khadavali Kosla	S.No.126,34,9	N 19º22'47" E 73º14'35"	Forest land	Non Tribal
								Old 3 (Plant Per ha.1111)		5.000	1	15390	0.82	Padgha	Kasne	Koshimbi	S.No.8	N 19 23 06 97 N 19 23 04 79 N 19 22 59 01 N 19 22 55 05	Forest land	Non Tribal
			Total							**40.000**	**6**		**6.81**							
2	Thane	Thane	Diversion of 37.3520 ha. R.F. & P.F. land for laying of 400 K.V. D/C Padhage (Khanivali) Padhage Kondhale Transmission line	12287	MoEFNo.6-MHC64/2013-BHO/116819.06.2014	37.352	As per stipulatedcondition No. 9 a) & b)	Old 3 (Plant Per ha.1111)	7th Year (Medical plants)	2.436	1	16130	0.42	Padgha	pachhapur, padgha, wadpa, dighashi	Tulsi, Mohandul, Maida, Pachhapur, vavoli, shegaon, sagaon	166, 188,42,185,87,54,14,15,52,53,150,48,137,78,11,77,75	N 19 26 52 4 N 19 26 53 5 N 19 25 27 8 N 19 25 27 2	Forest land	Tribal area
			Total							**2.436**	**1**		**0.42**							

Sr. No.	Circle	Division	Name of the Project	Project ID	Final sanction	Project Area (ha)	Details/ Particulars of work as per stipulated condition			Total Area/Total Quantum of specified work mentioned in col. 11	Total No of sites with respect to column. 12	Rate per unit (Rs.)	Amount (Rs. Lakhs)	Details of Area to be treated						
							Condition no. in the sanction letter	Type of plantation	Year of plantation (i.e. PPO/FYO/SYO/TYO etc.)					Range	Round	Beat	Compartment no.	Longitute	Wheter forest land or non - forest land	Tribal/remote area or non-tribal area
1	2	3	4	5	6	7	8	9	10	11	12	13	14	15	16	17	18	19	20	21
3	Thane	Thane	Diversion of 150.432 ha. of forest land in favour of Executive Engineer MSETCL EHV Construction Division, Tejashri Buliding for laying 400 K V D/C Babhaleshwar, Pune, Thane & Palghar District in the State of Maharashtra	12442	G.O.I.FC-III/MH-11/2016-NGP/34646 th April 2018	59.80	As per stipulatedcondition No. IV & V	Medicinal plants M.No.4 (Plant Per ha.1111)	PPO/ FYO	10.727	1	269693	28.93	Tokawada (S)	Pendri	Pendri	737	N19.282388 E73.667980	Forest land	Tribal
										1.274	1		3.44		Pendri	Talvli	138A	N19.302000 E73.614632	Forest land	Tribal
										1.964	1		5.30	Tokawada (N)	Tokawada	Kochre	31A	N19.313582 E73.585564	Forest land	Tribal
										2.030	1		5.47	Murbad (E)	Sargaon	Balegaon	25A, 258A	N19.919578 E73.571306	Forest land	Tribal
										2.240	1		6.04		Sargaon	Balegaon	81,29,58 & 4	N19.322795 E73.561590	Forest land	Non Tribal
										1.190	1		3.21	Kalyan	-	-	843	N19.373346 E73.286258	Forest land	Non Tribal
										3.800	1		10.25	Padgha	Padgha	Kasne	206,228 & 229	N19.392833 E73.229636	Forest land	Non Tribal
										1.090	1		2.94	Padgha	Padgha	Talvli	72, 54	N19.402323 E73.228083	Forest land	Non Tribal
										1.080	1		2.91	Padgha	Padgha	Tungrkhan	38A	N19.413672 E73.207225	Forest land	Non Tribal
										1.520	1		4.10	Padgha	Doghashi	Gorad	76, 106	N19.418920 E73.196754	Forest land	Non Tribal
										0.790	1		2.13	Padgha	Pachapur	Karnjoti	109	N19.418874 E73.196643	Forest land	Non Tribal
										7.750	1		20.90	Padgha	Pachapur	Mohadhul	1023	N19.432044 E73.178633	Forest land	Non Tribal
										4.000	1		10.79	Padgha	Pachapur	Mahap	86	N19.443659 E73.174621	Forest land	Non Tribal
										1.140	1		3.07	Padgha	Pachapur	Gondhade	46	N19.460553 E73.159646	Forest land	Non Tribal
										4.323	1		11.66	Padgha	Pachapur	Base	15, 113	N19.459814 E73.053438	Forest land	Non Tribal
										5.320	1		14.35	Padgha	Pachapur	Ghadne	77, 60A	N19.472276 E73.148465	Forest land	Non Tribal
			Total							**50.238**	**16.00**		**135.48**							
			Total of Thane Division							**92.674**	**23.00**		**142.71**							

Sr. No.	Circle	Division	Name of the Project	Project ID	Final sanction	Project Area (ha)	Details/ Particulars of work as per stipulated condition			Total Area/Total Quantum of specified work mentioned in col. 11	Total No of sites with respect to column. 12	Rate per unit (Rs.)	Amount (Rs. Lakhs)	Details of Area to be treated						
							Condition no. in the sanction letter	Type of plantation	Year of plantation (i.e. PPO/FYO/SYO/TYO etc.)					Range	Round	Beat	Compartment no.	Longitute	Wheter forest land or non - forest land	Tribal/remote area or non-tribal area
1	2	3	4	5	6	7	8	9	10	11	12	13	14	15	16	17	18	19	20	21
3	Thane	Shahapur	400KVF QDC Babhleshwar-Kudus T/L (Naneghat Section)	12442	G.O.IF.No.FC-III/MH-11/2016-NGP/3464 Dated 06.04.2018Dated 06.04.2018	17.1024	Model No.5 Ready Recknor Dated 13.11.2013	Medicinal Plantation	SYO	3.577	1	58853	2.25	Shahapur	Dhasai	Kinvali	276	N 19.22.451 E 73.29.846	Forest Land	Tribal
									SYO	1.240	1	58853	0.78	Shahapur	Dhasai	Kinvali	279	N 19 21 59.5 E 73 29 296	Forest Land	Tribal
									SYO	1.136	1	60347	0.73	Shahapur	Dhasai	Kinvali	275	N 19.22.496 E 73.29.935	Forest Land	Tribal
									SYO	1.124	1	60347	0.73	Shahapur	Dhasai	Kinvali	276	N 19.22.431 E 73.29.745	Forest Land	Tribal
									SYO	5.248	1	60347	3.39	Shahapur	Dhasai	Asnoli	256A	N 19.21.139 E73.26.151	Forest Land	Tribal
									SYO	2.068	1	60347	1.34	Shahapur	Shahapur	Vashind	96/4,172,130/3, 173, 170, 140/3, 169	N 19.23.798 E73.18.274	Forest Land	Tribal
									SYO	0.524	1	60347	0.34	Shahapur	Shahapur	Vashind	248	N19 23 38.2 E73 17 492	Forest Land	Tribal
									SYO	1.075	1	60347	0.69	Shahapur	Shahapur	Vashind	131,97	N 19 23 37.8 E 73 17 459	Forest Land	Tribal
									SYO	1.112	1	60347	0.72	Shahapur	Shahapur	Vashind	69A	N 19 23 26.1 E 73 14 392	Forest Land	Tribal
			Total							**17.102**	**9**		**10.97**							
4	Thane	Shahapur	765KV D/C Aurangabad - Padghe Transmission Line	12392	MoEF F.No.FC-III/MH-05/2015- State GovermentFLD-1815/CR300/F1027-10-2016	55.57	XVII(d)	Medicine Plantation	5th YO	13.980	1	16130	2.41	Shahapur	Dhasai	Kinhavali	163/1	N 19 20 25.37 E 73 31 2.45	Forest Land	Tribal
									5th YO	7.171	1	16130	1.24	Shahapur	Dhasai	Kinhavali	178	N 19 21 2.39 E 73 26 34.56	Forest Land	Tribal
									5th YO	6.087	1	16130	1.05	Shahapur	Dhasai	Nadgaon	126	N 19 19 51.57 E 73 13 13.00	Forest Land	Tribal
									5th YO	2.395	1	16130	0.41	Shahapur	Shahapur	Dahivali	79	N 19 21 31.12 E 73 23 23.97	Forest Land	Tribal
									5th YO	3.616	1	16130	0.62	Shahapur	Shahapur	Dahivali	44,64/5	N 19 22 10.14 E 73 21 25.21	Forest Land	Tribal
									5th YO	4.047	1	16130	0.70	Shahapur	Shahapur	Dahivali	20	N 19 22 29.84 E 73 20 46.24	Forest Land	Tribal
									5th YO	9.059	1	16130	1.56	Shahapur	Shahapur	Shera	0.489	N 19 22 57.97 E 73 19 16.78	Forest Land	Tribal
			Total							**46.355**	**7.00**		**8.00**							
			Total of Shahapur Division							**63.457**	**16.00**		**18.97**							

Sr. No.	Circle	Division	Name of the Project	Project ID	Final sanction	Project Area (ha)	Details/ Particulars of work as per stipulated condition			Total Area/Total Quantum of specified work mentioned in col. 11	Total No of sites with respect to column. 12	Rate per unit (Rs.)	Amount (Rs. Lakhs)	Details of Area to be treated						
							Condition no. in the sanction letter	Type of plantation	Year of plantation (i.e. PPO/FYO/SYO/TYO etc.)					Range	Round	Beat	Compartment no.	Longitute	Wheter forest land or non - forest land	Tribal/remote area or non-tribal area
1	2	3	4	5	6	7	8	9	10	11	12	13	14	15	16	17	18	19	20	21
5	Thane	Roha	Diversion of 0.2863 ha R.F.land for laying of 220 kv over head transmission of M/S pioneers Gas Power Ltd.in Raigad	12224	-6/MHB21/2014-BHO-142841798	0.290	6/MHB21/2014-BHO-1428	Medicine Plant	6th.Yo	0.286	1	15390	0.05	Mangaon	Patnus	Patnus	Survey No. 361 Village Varachi vadi	N 18 24 26 E 73 21 08	Forest Land	Non Tribal
			Total of Roha Division							**0.286**	**1.00**		**0.05**							
6	Thane	Dahanu	400 K.V. Navsari - Boisar Tranmission Line	12345 (53)	APCCF of State Govt.FLD- 1214/ C.R.- 165/ F-1007.09.2018	56.86	19 (d)	Medicinal Plantation	SYO	0.506	3	29277	0.16	Udhawa	Kurze	Kurze	436	N20.05 55 80 E72 57 59.18	Forest Land	Tribal
										1.173		29277	0.37	Udhawa	Kurze	Kurze	411, 367	N20.07 19 53/ E72 57 30.56		
										0.736		29277	0.23	Udhawa	Anvir	Anvir	367	N20.06 43 82/ E72 56 42.72		
			Total			**56.86**				**2.415**	**3**		**0.76**							
7	Thane	Dahanu	Diversion of 62.28 ha. Of Forest land for Construction of Kamare Manor Irrigation Scheme	12030	MoffNo.8-124/2011 FC10.08.2016	62.28	10	Restoration and regeneration in the vicinity of the project Area. **(Bamboo Plantation) SYO WORKS**	5th YO	10.000	1	6343	0.68	Palghar	Shelwali	Kamare	C. No.100, 104	N 19 40 43.1/ E 72 48 46.5	Forest Land	Tribal
			Total			**62.28**				**10.000**	**1**		**0.68**							
8	Thane	Dahanu	400 KV Kala Kudus Transmission Line	12374 (54)		147.24	27	Medicinal Plantation	5th YO	2.760	1	16130	0.48	Udhawa	Modgaon	Modgaon	321	N20.073356/ E72.990426	Forest Land	Tribal
										1.472	1	16130	0.25	Udhawa	Modgaon	Modgaon	325	N20.073496/ E72.989643		
										1.012	1	16130	0.17	Udhawa	Kurze	Udhawa	160	N20 04 25.4 206 / E072 59 34		
										1.656	1	16130	0.29	Udhawa	Aste	Raipur	Bengaon 55	N20.072598/ E72.997247		
										0.920	1	16130	0.16	Udhawa	Aste	Raipur	Bengaon 44	N20.073098/ E72.993368		
										3.565	1	16130	0.62	Udhawa	Aste	Raipur	53	N20.073387/ E72.993902		

Sr. No.	Circle	Division	Name of the Project	Project ID	Final sanction	Project Area (ha)	Details/ Particulars of work as per stipulated condition			Total Area/Total Quantum of specified work mentioned in col. 11	Total No of sites with respect to column. 12	Rate per unit (Rs.)	Amount (Rs. Lakhs)	Details of Area to be treated						
							Condition no. in the sanction letter	Type of plantation	Year of plantation (i.e. PPO/FYO/SYO/TYO etc.)					Range	Round	Beat	Compartment no.	Longitute	Wheter forest land or non - forest land	Tribal/remote area or non-tribal area
1	2	3	4	5	6	7	8	9	10	11	12	13	14	15	16	17	18	19	20	21
	Thane	Dahanu	400 KV Kala Kudus Transmission Line	12374 (54)		147.24	27	Medicinal Plantation	5th YO	2.185	1	16130	0.38	Udhawa	Aste	Raipur	Bengaon 54	N20.083967/ E72.983697		
										1.380	1	16130	0.24	Udhawa	Aste	Raipur	141	N20.042947/ E73.017435		
										2.944	1	16130	0.51	Udhawa	Aste	Raipur	135	N20.042935/ E73.01741		
										1.748	1	16130	0.30	Udhawa	Aste	Raipur	134	N20.055549/ E73.005171		
										0.598	1	16130	0.10	Udhawa	Aste	Raipur	139	N20.042921/ E73.017496		
										1.656	1	16130	0.29	Kasa	Dahiyale	Baugoan	71	N19 56.926/ E73 01.375		
										0.460	1	16130	0.08	Kasa	Dahiyale	Baugoan	53	N19 56.298/ E73 01.215		
										0.368	1	16130	0.06	Kasa	Dahiyale	Baugoan	68	N19 57.093/ E73 01.399		
										0.828	1	16130	0.14	Kasa	Dahiyale	Baugoan	49	N19 55.708/ E73 01.238		
										2.300	1	16130	0.40	Kasa	Dahiyale	Baugoan	47	N19 56.032/ E73 01.201		
										2.530	1	16130	0.44	Kasa	Dahiyale	Baugoan	24	N19 55.307/ E73 01.170		
										1.242	1	16130	0.21	Kasa	Dahiyale	Baugoan	22	N19 55.437/ E73 01.194		
										4.002	1	16130	0.69	Kasa	Murbad	Murbad	6, 101, 102, 96, 90, 91	N19 56.007/ E73 01.291		
										11.960	1	16130	2.06	Kasa	Murbad	Murbad	Sarsi 297, 279 etc	N19 54.495/ E73 01.431		
										11.040	1	16130	1.91	Kasa	Murbad	Murbad	Khadaki 20,21, 17	N19 52.620/ E73 01.491		
										3.105	1	16130	0.54	Kasa	Dahiyale	Baugoan	Ambhighar S.No. 76, C.No.302	N19 56.485/ E73 01.238		
			Total							**59.731**	**22**		**10.31**							
			Total of Dahanu Division							**72.146**	**26**		**11.74**							
			Grand total of Thane circle							**228.564**	**66**		**173.47**							

Sr. No.	Circle	Division	Name of the Project	Project ID	Final sanction	Project Area (ha)	Details/ Particulars of work as per stipulated condition			Total Area/Total Quantum of specified work mentioned in col. 11	Total No of sites with respect to column. 12	Rate per unit (Rs.)	Amount (Rs. Lakhs)	Details of Area to be treated						
							Condition no. in the sanction letter	Type of plantation	Year of plantation (i.e. PPO/FYO/SYO/TYO etc.)					Range	Round	Beat	Compartment no.	Longitute	Wheter forest land or non - forest land	Tribal/remote area or non-tribal area
1	2	3	4	5	6	7	8	9	10	11	12	13	14	15	16	17	18	19	20	21
11	Yavatmal	Pandharkawda	Ghonsa Open Cast	--	MoEF6MHC-30/2014/BHO-237242437	24.00	XVI	Fund for Protected Area	4th year Mix Plantation	10.000	1	18499	**1.85**	Wani	Wani	Shirpur	CA-14	19.97124 78.98718	Forest Land	-
	Yavatmal	Pandharkawda	765 KV Hyd to Wardha TM Line	--	MoEFFC-II/MH-44/2016-NGp/205342923	32.21	XIXd	Meditionla Plantations	4th year Medicinal plantation	1.000	4	18499.00	**0.18**	Jamani	Jamani	Aamb	90B	19.839306 78.657583	Forest Land	-
	Yavatmal	Pandharkawda								5.000			**0.92**		Matharjun	Gavara	55	19.867778 78.649083		-
	Yavatmal	Pandharkawda								1.614			**0.30**	PKD	PKD	Kondi	644	20.086624 78.540614		-
	Yavatmal	Pandharkawda								2.000			**0.37**		PKD	PKD	646	20.22563 78.6166		-
			Total							**9.614**	**4**		**1.78**							
			Grand total of Yavatmal circle							**19.614**	**5**		**3.63**							
			Grand Total of Conditional Plantation Works							**507.746**	**212**		**278.52**							

Annexure – VI – B
(Conditional Works-Other)

ANNUAL PLAN OF OPERATIONS 2022-23 FOR WORKS UNDER CAMPA

Annexure - VI-B ---------- FOR CONDITIONAL WORKS TO BE TAKEN UNDER SANCTIONED PROJECTS

Sr. No.	Circle	Division	Name of the Project	Project ID	Final sanction	Project Area (ha)	Details/ Particulars of work as per stipulated condition		Total Area/Total Quantum of specified work mentioned in col. 11	Total No of sites with respect to column. 12	Rate per unit (Rs.)	Amount (Rs. Lakhs)	Details of Area to be treated						
							Condition no. in the sanction letter	Particulars of works					Range	Round	Beat	Compartment no.	Latlong	Wheter forest land or non - forest land	Tribal /remote area or non-tribal area
1	2	3	4	5	6	7	8	9	10	11	12	13	14	15	16	17	18	19	20
1	APCCF (WL) East, Nagpur	DD, PTR	4 laying of NH-form MP/MH border to Nagpur -- mitigation measures for NH 7 mansar to MP State border	11886	NHAI/PIU/ NH-7 Highway/20 1/032.6.2016	49.246	Check naka and maintenance	सावरा संरक्षण कुटीवर वनसंरक्षण कामाकरीता हंगामी मजूर ठेवणे 4 मजूर 12 महिने	1	1	396.73	4.95	Deolapar	Deolapar	Sawara	496	N 21°37'34.90" E 079° 23' 23.80"	Forest Land	
								सावरा संरक्षण कुटीच्या बळकटीकरणासाठी आवश्यक साहीत्य खरेदी करणे	1	1		2.90	Deolapar	Deolapar	Sawara	496	N 21°37'34.90" E 079° 23' 23.80"	Forest Land	
								Total				**7.85**							
							Corridor maintenance	जुन्या गुरे प्रतिबंधक चरातील (TCM) गाळ काढणे कक्ष क्र. 589 (1100 रनिंग मीटर)	1100 Runing meter	1		5.44	Paoni (UC)	Paoni	Pathari	589	N 21°29'54.65" E 079°19' 39.01"	Forest Land	
								जुन्या गुरे प्रतिबंधक चरातील (TCM) गाळ काढणे कक्ष क्र. 588 (800 रनिंग मीटर)	800 Runing meter	1		3.63	Paoni (UC)	Paoni	Pathari	588	N 21°30'39.00" E 079°19' 57.59"	Forest Land	
								AUP 7 ते 8 मधील अखाद्य वनस्पती रानतुळसचे निर्मुलन करणे. कक्ष क्र. 589 हेक्टर)				0.37	Paoni (UC)	Paoni	Pathariy	589	N 21°29'45.79" E 079°19' 34.34"	Forest Land	
								वन्यप्राणी भ्रमण मार्गावरील अखाद्य वनस्पतीचे विरळणी कामे कक्ष क्र. 582, 583 (9.5हे.)	9.5 Ha.	1		1.17	Paoni (UC)	Paoni	Palora	582, 583	N 21°33'24.03" E 079°21' 19.45"	Forest Land	
								वन्यप्राणी भ्रमण मार्गावरील अखाद्य वनस्पतीचे विरळणी कामे कक्ष क्र. 582, 583 (16 हे.)				1.98	Paoni (UC)	Paoni	Palora	582, 583	N 21°33'23.13" E 079°21' 18.40"	Forest Land	

Sr. No.	Circle	Division	Name of the Project	Project ID	Final sanction	Project Area (ha)	Details/ Particulars of work as per stipulated condition		Total Area/Total Quantum of specified work mentioned in col. 11	Total No of sites with respect to column. 12	Rate per unit (Rs.)	Amount (Rs. Lakhs)	Details of Area to be treated						
							Condition no. in the sanction letter	Particulars of works					Range	Round	Beat	Compartment no.	Latlong	Wheter forest land or non - forest land	Tribal /remote area or non-tribal area
1	2	3	4	5	6	7	8	9	10	11	12	13	14	15	16	17	18	19	20
2	APCCF (WL) East, Nagpur	DD, PTR	4 laying of NH-form MP/MH border to Nagpur -- mitigation measures for NH 7 mansar to MP State border	11886	NHAI/PIU/ NH-7 Highway/201/032.6.2016	49.246	Corridor maintenance	वन्यप्राणी भ्रमण मार्गावरील अखाद्य वनस्पतीचे विरळणी कामे कक्ष क्र. 579 (15 हे.)	15 Ha.	1		1.85	Paoni (UC)	Paoni	Khapa	579	N 21°34'25.51" E 079°19' 48.45"	Forest Land	
								पवनी -सिल्लारी रोडवरील अखाद्य वनस्पती निर्मुलन कक्ष क्र. 587, 586, 585 (25 हे.)	25 Ha.	1		3.05	Paoni (UC)	Paoni	Chargaon	587, 586, 585	N 21°31'32.54" E 079°20' 13.16"	Forest Land	
								Carryingout Natural regeneration work in co no. 589 (20 Ha)	20 Ha.	1		0.73	Paoni (UC)	Paoni	Pathariy	589	N 21°30'10.49" E 079°19' 13.73"	Forest Land	
								Carryingout Natural regeneration work in co no. 594 (10 Ha)	10 Ha.	1		0.37	Paoni (UC)	Chorbahuli	Chorbahuli	594	N 21°29' 53.52" E 079°18' 24.11"	Forest Land	
								वन्यप्राणी भ्रमण मार्गावरील अखाद्य वनस्पतीचे विरळणी कामे कक्ष क्र. 595 चोरबाहुली टी पाईंट ते दाहोदा रोड	70 Ha.	1		2.35	Chorbahuli	Chorbahuli	Chorbahuli	595	N 21°28' 53.44" E 079°17' 18.15"	Forest Land	
								वन्यप्राणी भ्रमण मार्गावरील अखाद्य वनस्पतीचे विरळणी कामे चोरबाहुली प्रवेशद्वार ते पाली तलाव	90 Ha.	1		3.02	Chorbahuli	Chorbahuli	Chorbahuli	591	N 21°28' 09.50" E 079°18' 40.78"	Forest Land	
								वन्यप्राणी भ्रमण मार्गावरील अखाद्य वनस्पतीचे विरळणी कामे पाली तलाव ते दाहोदा कुटी	70 Ha.	1		2.35	Chorbahuli	Kirangisara	Dahoda	599	N 21°29' 32.59" E 079°15' 36.49"	Forest Land	

Sr. No.	Circle	Division	Name of the Project	Project ID	Final sanction	Project Area (ha)	Details/ Particulars of work as per stipulated condition		Total Area/Total Quantum of specified work mentioned in col. 11	Total No of sites with respect to column. 12	Rate per unit (Rs.)	Amount (Rs. Lakhs)	Details of Area to be treated						
							Condition no. in the sanction letter	Particulars of works					Range	Round	Beat	Compartment no.	Latlong	Wheter forest land or non - forest land	Tribal /remote area or non-tribal area
1	2	3	4	5	6	7	8	9	10	11	12	13	14	15	16	17	18	19	20
3	APCCF (WL) East, Nagpur	DD, PTR	4 laying of NH-form MP/MH border to Nagpur -- mitigation measures for NH 7 mansar to MP State border	11886	NHAI/PIU/ NH-7 Highway/20 1/032.6.2016	49.246	Corridor maintenance	Carryingout Natural regeneration work in co no.591 (20 Ha)	20 Ha.	1		0.73	Chorbahuli	Chorbahuli	Chorbahuli	591	N 21°27' 53.66" E 079°18' 26.20"	Forest Land	
								Road sinages (NH 44)	1	1		2.90	Paoni (UC)	Chorbahuli	Chorbahuli	590	N 21°29' 32.97" E 079°19' 24.74"	Forest Land	
								रा. म.-44 वरील चोरबाहली हायवे कुटीच्यॉ दर्शनिय भागास डिजीटल वॉल पेन्टिंग करणे	1	1		0.50					N 21°28' 19.62" E 079°19' 19.49"	Forest Land	
								भूमीगत बंधारा		1		0.26	Paoni (UC)	Chorbahuli	North Chorbahuli	594	N 21°29' 59.43" E 079°18' 08.44"	Forest Land	
								भूमीगत बंधारा		1		0.26	Paoni (UC)	Chorbahuli	North Chorbahuli	594	N 21°29' 59.43" E 079°18' 08.44"	Forest Land	
								भूमीगत बंधारा		1		0.30	Paoni (UC)	Chorbahuli	North Chorbahuli	594	N 21°29' 59.43" E 079°18' 08.44"	Forest Land	
								भूमीगत बंधारा		1		0.30	Paoni (UC)	Chorbahuli	North Chorbahuli	594	N 21°29' 59.43" E 079°18' 08.44"	Forest Land	
								भूमीगत बंधारा		1		0.30	Paoni (UC)	Chorbahuli	North Chorbahuli	594	N 21°29' 59.43" E 079°18' 08.44"	Forest Land	
								भूमीगत बंधारा		1		0.34	Paoni (UC)	Chorbahuli	North Chorbahuli	594	N 21°29' 59.43" E 079°18' 08.44"	Forest Land	
								भूमीगत बंधारा		1		0.21	Paoni (UC)	Chorbahuli	North Chorbahuli	594	N 21°29' 59.43" E 079°18' 08.44"	Forest Land	
								भूमीगत बंधारा		1		0.26	Paoni (UC)	Chorbahuli	North Chorbahuli	594	N 21°29' 59.43" E 079°18' 08.44"	Forest Land	
								AUP क्रमांक व MNB 8 यामधील क्षेत्रास Chainlink Fencing				40.85	Paoni (UC)	Paoni	Pathariy	589	N 21°30' 07.29" E 079°19' 18.87"	Forest Land	
														Chorbahuli	Chorbahuli	590			
								Total				**73.40**							

Sr. No.	Circle	Division	Name of the Project	Project ID	Final sanction	Project Area (ha)	Details/ Particulars of work as per stipulated condition		Total Area/Total Quantum of specified work mentioned in col. 11	Total No of sites with respect to column. 12	Rate per unit (Rs.)	Amount (Rs. Lakhs)	Details of Area to be treated						
							Condition no. in the sanction letter	Particulars of works					Range	Round	Beat	Compartment no.	Latlong	Wheter forest land or non - forest land	Tribal /remote area or non-tribal area
1	2	3	4	5	6	7	8	9	10	11	12	13	14	15	16	17	18	19	20
4	APCCF (WL) East, Nagpur	DD, PTR	4 laying of NH-form MP/MH border to Nagpur -- mitigation measures for NH 7 mansar to MP State border	11886	NHAI/PIU/ NH-7 Highway/20 1/032.6.2016	49.246	Maintenance of Water Holes	Rejuvenation of Forest tank in co no 588				1.61	Paoni (UC)	Paoni	Patharai	588	N 21°30' 54.25" E 079°19' 46.00"	Forest Land	
								Deepening & Desilting of Existing Nala in Khapa Beat Co. no. 579		1		1.84	Paoni (UC)	Paoni	Khapa	579	N 21°35' 02.40" E 079°19' 03.88"	Forest Land	
								Deepening & Desilting of Existing Nala in Chorbahuli Beat Co. no. 590		1		1.84	Paoni (UC)	Chorbahuli	Chorbahuli	590	N 21°29' 14.17" E 079°19' 01.71"	Forest Land	
								Deepening & Desilting of Existing Nala in Palora Beat Co. no. 582		1		1.84	Paoni (UC)	Paoni	Palora	582	N 21°33' 31.04" E 79°21' 24.96"	Forest Land	
								Deepening & Desilting of Existing Nala in Chorbahuli Beat Co. no. 590		1		1.98	Paoni (UC)	Chorbahuli	Chorbahuli	590	N 21°29' 23.53" E 79°19' 07.17"	Forest Land	
								विंधन विहीरीवर सोलर पंप बसविणे 1) अंबाझरी कक्ष क्र. 598 2) पालोरा कक्ष क्र. 582 3) उत्तर चोरबाहुली कक्ष क्र. 594		3		5.99	Paoni (UC)	Chorbahuli	Ambazari	598	N 21°31' 25.28" E 79°15' 27.85"	Forest Land	
													Paoni (UC)	Paoni	Palora	582			
													Paoni (UC)	Chorbahuli	North Chorbahuli	594			
								MNB 9 वर 5 HP चा सोलर पंप बसविणे		1		4.50	Chorbahuli					Forest Land	
								टँकरने पाणवठ्यावर पाणी टाकणे				6.73	Paoni (UC), Chorbahuli, Deolapar					Forest Land	
								Total				**26.33**							

Sr. No.	Circle	Division	Name of the Project	Project ID	Final sanction	Project Area (ha)	Details/ Particulars of work as per stipulated condition		Total Area/Total Quantum of specified work mentioned in col. 11	Total No of sites with respect to column. 12	Rate per unit (Rs.)	Amount (Rs. Lakhs)	Details of Area to be treated						
							Condition no. in the sanction letter	Particulars of works					Range	Round	Beat	Compartment no.	Latlong	Wheter forest land or non - forest land	Tribal /remote area or non-tribal area
1	2	3	4	5	6	7	8	9	10	11	12	13	14	15	16	17	18	19	20
5	APCCF (WL) East, Nagpur	DD, PTR	4 laying of NH-form MP/MH border to Nagpur -- mitigation measures for NH 7 mansar to MP State border	11886	NHAI/PIU/ NH-7 Highway/20 1/032.6.2016	49.246	Water Source Creation	कृत्रीत पाणस्थळाजवळ लहान तलाव निर्मीती	1	1		0.48	Paoni (UC)	Paoni	Khapa	579	N 21°35'01.99" E 79°19' 03.69"	Forest Land	
								कृत्रीत पावस्थळाजवळ लहान तलाव निर्मीती	1	1		0.48	Paoni (UC)	Paoni	Palora	583	N 21°34'03.23" E 79°20'12.12"	Forest Land	
								नवीन बोरवेल खोदणे	1	1		1.34	Chorbahuli	Chorbahuli	Sarakha	602	N 21°28'56.87" E 79°15'09.83"	Forest Land	
								नवीन बोरवेल खोदणे	1	1		1.34	Paoni (UC)	Paoni	Palora	582	N 21°33'43.69" E 79°21'21.60"	Forest Land	
								Construction of Loose boulder (5 M.)	5 Meter	1		0.25	Paoni (UC)	Paoni	Khapa	580	N 21°35'06.36" E 79°19'31.40"	Forest Land	
								Construction of Loose boulder (5 M.)	5 Meter	1		0.25	Paoni (UC)	Paoni	Khapa	580	N 21°35'06.36" E 79°19'31.40"	Forest Land	
								Construction of Loose boulder (5 M.)	5 Meter	1		0.29	Paoni (UC)	Paoni	Khapa	580	N 21°35'06.36" E 79°19'31.40"	Forest Land	
								Construction of Loose boulder (6 M.)	6 Meter	1		0.29	Paoni (UC)	Paoni	Khapa	580	N 21°35'06.36" E 79°19'31.40"	Forest Land	
								Construction of Loose boulder (6 M.)	6 Meter	1		0.29	Paoni (UC)	Paoni	Khapa	580	N 21°35'06.36" E 79°19'31.40"	Forest Land	
								Construction of Loose boulder (6 M.)	6 Meter	1		0.29	Paoni (UC)	Paoni	Khapa	580	N 21°35'06.36" E 79°19'31.40"	Forest Land	
								Construction of Loose boulder (6 M.)	6 Meter	1		0.29	Paoni (UC)	Paoni	Khapa	580	N 21°35'06.36" E 79°19'31.40"	Forest Land	
								Construction of Loose boulder (6 M.)	6 Meter	1		0.29	Paoni (UC)	Paoni	Khapa	580	N 21°35'06.36" E 79°19'31.40"	Forest Land	

Sr. No.	Circle	Division	Name of the Project	Project ID	Final sanction	Project Area (ha)	Details/ Particulars of work as per stipulated condition		Total Area/Total Quantum of specified work mentioned in col. 11	Total No of sites with respect to column. 12	Rate per unit (Rs.)	Amount (Rs. Lakhs)	Details of Area to be treated						
							Condition no. in the sanction letter	Particulars of works					Range	Round	Beat	Compartment no.	Latlong	Wheter forest land or non - forest land	Tribal /remote area or non-tribal area
1	2	3	4	5	6	7	8	9	10	11	12	13	14	15	16	17	18	19	20
6	APCCF (WL) East, Nagpur	DD, PTR	4 laying of NH-form MP/MH border to Nagpur -- mitigation measures for NH 7 mansar to MP State border	11886	NHAI/PIU/ NH-7 Highway/201/032.6.2016	49.246	Water Source Creation	Construction of Loose boulder (7 M.)	7 Meter	1		0.34	Paoni (UC)	Paoni	Khapa	580	N 21°35'06.36" E 79°19'31.40"	Forest Land	
								Construction of Loose boulder (7 M.)	7 Meter	1		0.34	Paoni (UC)	Paoni	Khapa	580	N 21°35'06.36" E 79°19'31.40"	Forest Land	
								Construction of Loose boulder (7 M.)	7 Meter	1		0.34	Paoni (UC)	Paoni	Khapa	580	N 21°35'06.36" E 79°19'31.40"	Forest Land	
								Construction of wire mesh check dam (Gabbian Bandhara) Across Nalla Length 5 M	5 Meter	1		0.56	Deolapar	Deolapar	Sawara	495	N 21°37'16.1" E 079° 23' 09.4"	Forest Land	
								Construction of wire mesh check dam (Gabbian Bandhara) Across Nalla Length 5 M	5 Meter	1		0.56	Deolapar	Deolapar	Sawara	495	N 21°37'16.1" E 079° 23' 09.4"	Forest Land	
								Construction of wire mesh check dam (Gabbian Bandhara) Across Nalla Length 6 M	6 Meter	1		0.56	Deolapar	Deolapar	Sawara	495	N 21°37'15.2" E 079° 23' 08.6"	Forest Land	
								Construction of wire mesh check dam (Gabbian Bandhara) Across Nalla Length 6 M	6 Meter	1		0.66	Deolapar	Deolapar	Sawara	496	N 21°37'45.8" E 079° 22' 56.0"	Forest Land	
								Construction of wire mesh check dam (Gabbian Bandhara) Across Nalla Length 6 M	6 Meter	1		0.66	Deolapar	Deolapar	Sawara	496	N 21°37'46.7" E 079° 22' 55.1"	Forest Land	

Sr. No.	Circle	Division	Name of the Project	Project ID	Final sanction	Project Area (ha)	Details/ Particulars of work as per stipulated condition		Total Area/Total Quantum of specified work mentioned in col. 11	Total No of sites with respect to column. 12	Rate per unit (Rs.)	Amount (Rs. Lakhs)	Details of Area to be treated						
							Condition no. in the sanction letter	Particulars of works					Range	Round	Beat	Compartment no.	Latlong	Wheter forest land or non - forest land	Tribal /remote area or non-tribal area
1	2	3	4	5	6	7	8	9	10	11	12	13	14	15	16	17	18	19	20
7	APCCF (WL) East, Nagpur	DD, PTR	4 laying of NH-form MP/MH border to Nagpur -- mitigation measures for NH 7 mansar to MP State border	11886	NHAI/PIU/ NH-7 Highway/201/032.6.2016	49.246	Water Source Creation	Construction of wire mesh check dam (Gabbian Bandhara) Across Nalla Length 6 M	6 Meter	1		0.66	Deolapar	Deolapar	Sawara	496	N 21°37'46.7" E 079° 22' 55.1"	Forest Land	
								Construction of wire mesh check dam (Gabbian Bandhara) Across Nalla Length 6 M	6 Meter	1		0.66	Deolapar	Deolapar	Sawara	496	N 21°37'46.7" E 079° 22' 55.1"	Forest Land	
								Construction of wire mesh check dam (Gabbian Bandhara) Across Nalla Length 6 M	6 Meter	1		0.66	Deolapar	Deolapar	Sawara	496	N 21°37'46.7" E 079° 22' 55.1"	Forest Land	
								Construction of wire mesh check dam (Gabbian Bandhara) Across Nalla Length 6 M	6 Meter	1		0.66	Deolapar	Deolapar	Sawara	496	N 21°37'46.7" E 079° 22' 55.1"	Forest Land	
								Construction of wire mesh check dam (Gabbian Bandhara) Across Nalla Length 5 M	5 Meter	1		0.56	Deolapar	Deolapar	Sawara	496	N 21°37'16.1" E 079° 23' 09.4"	Forest Land	
								Construction of wire mesh check dam (Gabbian Bandhara) Across Nalla Length 5 M	5 Meter	1		0.56	Deolapar	Deolapar	Sawara	496	N 21°37'12.8" E 079° 23' 06.7"	Forest Land	
								Construction of wire mesh check dam (Gabbian Bandhara) Across Nalla Length 5 M	5 Meter	1		0.56	Deolapar	Deolapar	Sawara	496	N 21°37'16.1" E 079° 23' 09.4"	Forest Land	

Sr. No.	Circle	Division	Name of the Project	Project ID	Final sanction	Project Area (ha)	Details/ Particulars of work as per stipulated condition		Total Area/Total Quantum of specified work mentioned in col. 11	Total No of sites with respect to column. 12	Rate per unit (Rs.)	Amount (Rs. Lakhs)	Details of Area to be treated						
							Condition no. in the sanction letter	Particulars of works					Range	Round	Beat	Compartment no.	Latlong	Wheter forest land or non - forest land	Tribal /remote area or non-tribal area
1	2	3	4	5	6	7	8	9	10	11	12	13	14	15	16	17	18	19	20
8	APCCF (WL) East, Nagpur	DD, PTR	4 laying of NH-form MP/MH border to Nagpur -- mitigation measures for NH 7 mansar to MP State border	11886	NHAI/PIU/ NH-7 Highway/20 1/032.6.2016	49.246	Water Source Creation	Construction of wire mesh check dam (Gabbian Bandhara) Across Nalla Length 6 M	6 Meter	1		0.66	Chorbahuli	Chorbahuli	Chorbahuli	591	N 21°28'26.40" E 079° 18' 56.47"	Forest Land	
								Construction of wire mesh check dam (Gabbian Bandhara) Across Nalla Length 8 M	8 Meter	1		0.87	Chorbahuli	Chorbahuli	Chorbahuli	591	N 21°28'26.40" E 079° 18' 56.47"	Forest Land	
								Construction of wire mesh check dam (Gabbian Bandhara) Across Nalla Length 8 M	8 Meter	1		0.87	Chorbahuli	Chorbahuli	Chorbahuli	591	N 21°28'26.40" E 079° 18' 56.47"	Forest Land	
								Total				**16.50**							
							Protection hut	Construction of Protection Hut with & Toilet (G+1) at Sawara Bridge Near C.N. 496 near N. H. 44 in Sawara beat in Deolapar Wild Life Range of PTR	1	1		24.97	Deolapar	Deolapar	Sawara	496	N 21°39'0793" E 079° 22' 29.41"	Forest Land	
								Total				**25.95**							
							Habitat / meadow	Estimate for NH 44 Year 2019-20 TCM Work (जैविक कुंपन)	750 Runing Meter	1		3.45	Chorbahuli	Chorbahuli	Chorbahuli	591	N 21°28'21.00" E 79° 19' 20.97"	Forest Land	
								Live Hege Fencing (जैविक कुंपन तयार)	750 Runing Meter	1		3.71	Deolapar	Deolapar	Sawara	495	N 21°36'49.74" E 79° 23' 01.04"	Forest Land	

Sr. No.	Circle	Division	Name of the Project	Project ID	Final sanction	Project Area (ha)	Details/ Particulars of work as per stipulated condition		Total Area/Total Quantum of specified work mentioned in col. 11	Total No of sites with respect to column. 12	Rate per unit (Rs.)	Amount (Rs. Lakhs)	Details of Area to be treated						
							Condition no. in the sanction letter	Particulars of works					Range	Round	Beat	Compartment no.	Latlong	Wheter forest land or non - forest land	Tribal /remote area or non-tribal area
1	2	3	4	5	6	7	8	9	10	11	12	13	14	15	16	17	18	19	20
	APCCF (WL) East, Nagpur	DD, PTR	4 laying of NH-form MP/MH border to Nagpur -- mitigation measures for NH 7 mansar to MP State border	11886	NHAI/PIU/NH-7 Highway/201/032.6.2016	49.246	Habitat / meadow	Live Hege Fencing (जैविक कुंपन तयार)	750 Runing Meter	1		3.70	Deolapar	Deolapar	Sawara	496	N 21°37'08.99" E 79° 23' 10.36"	Forest Land	
								अखाद्य वनस्पतीचे (उदा. लॅन्टीना इ.) चे निर्मुलन करुन बांबू लागवड करणे कक्ष क्र. 590 (5 हे.)	5 Ha.	1		1.87	Paoni (UC)	Chorbahuli	Chorbahuli	590	N 21°29'20.87" E 79° 19' 18.36"	Forest Land	
								अखाद्य वनस्पतीचे (उदा. लॅन्टीना इ.) चे निर्मुलन करुन बांबू लागवड करणे कक्ष क्र.598 (20 हे.)	20 Ha.	1		1.97	Paoni (UC)	Chorbahuli	Ambazari	598	N 21°31'29.80" E 79° 15' 29.03"	Forest Land	
								Total				**14.69**							
			Total for APCCF (WL) East, Nagpur Circle									**164.72**							
1	Dhule	Dhule	Diversion of 7.65 ha forest land in favour of National Highway Authority of India (NHAI) for development and operation of four / six laning of bodhare (Km 390.000) to Dhule (Km 452.800) section of Nh-211 (New NH No.52) at Village Borvihar & Narval Tal-Dhule in Dhule District in the State of Maharashtra Regarding.	12655	MoEFFC-II/MH-98/2018-NGP/7884 Dt. 28.2.202128.02.2021	7.65	28.02.2021	SMC Work	SMC Work	9	79526.284	3.04	Dhule	Borvihir	Kaykheda	322	N 20.4324.278 E 74.3910.321	Forest Land	Non Trible
	Dhule	Dhule									79526.284	3.04	Dhule	Borvihir	Kaykheda	322	N 20.4324.278 E 74.3910.321	Forest Land	Non Trible
	Dhule	Dhule									79526.284	3.04	Dhule	Borvihir	Kaykheda	322	N 20.4324.278 E 74.3910.321	Forest Land	Non Trible
	Dhule	Dhule									79526.284	3.04	Dhule	Borvihir	Kaykheda	322	N 20.4324.278 E 74.3910.321	Forest Land	Non Trible
	Dhule	Dhule									79526.284	3.04	Dhule	Borvihir	Kaykheda	322	N 20.4324.278 E 74.3910.321	Forest Land	Non Trible
	Dhule	Dhule									79526.284	3.04	Dhule	Borvihir	Kaykheda	322	N 20.4324.278 E 74.3910.321	Forest Land	Non Trible
	Dhule	Dhule									79526.284	3.04	Dhule	Borvihir	Kaykheda	322	N 20.4324.278 E 74.3910.321	Forest Land	Non Trible
	Dhule	Dhule									21265.636	2.74	Dhule	Borvihir	Kaykheda	320	N 20.4324.278 E 74.3910.321	Forest Land	Non Trible
	Dhule	Dhule									21265.636	1.14	Dhule	Borvihir	Kaykheda	320	N 20.4324.278 E 74.3910.321	Forest Land	Non Trible
	Dhule	Dhule								**9**		**25.16**							
	Dhule	Dhule							Birds Nest No. 7590 Nest	1	700	53.13		Dhule					
			Total for Dhule Circle							**10**		**78.29**							

Sr. No.	Circle	Division	Name of the Project	Project ID	Final sanction	Project Area (ha)	Details/ Particulars of work as per stipulated condition		Total Area/Total Quantum of specified work mentioned in col. 11	Total No of sites with respect to column. 12	Rate per unit (Rs.)	Amount (Rs. Lakhs)	Details of Area to be treated						
							Condition no. in the sanction letter	Particulars of works					Range	Round	Beat	Compartment no.	Latlong	Wheter forest land or non - forest land	Tribal /remote area or non-tribal area
1	2	3	4	5	6	7	8	9	10	11	12	13	14	15	16	17	18	19	20
1	Nagpur	Wardha	Nagpur-Mumbai Super Comunication Expressway (Samrudhi Highway)	--	------	34.77	25	An afforestation plan, containing sepcial protection measures for the proposed expressway, involving area less than 10 ha.	3.76	1	385580	14.50	Hingani	Seloo	Kelzar	616	N-20 49 45 E-78 47 56	ZJ	NT
	Nagpur	Wardha							7.79	1	385580	30.04			Seloo	7	N-20 48 59 E-78 45 18	ZJ	NT
	Nagpur	Wardha							3.93	1	385580	15.15				206	N-20 48 55 E-78 44 54	ZJ	NT
	Nagpur	Wardha							8.63	1	385580	33.28				210	N-20 48 59 E-78 45 18	ZJ	NT
	Nagpur	Wardha							5.35	1	385580	20.63			Kelzar	127/1	N-20 49 40 E-78 47 35	ZJ	NT
	Nagpur	Wardha							0.45	1	385580	1.74			Seloo	56	N-20 48 54 E-78 44 05	ZJ	NT
	Nagpur	Wardha							1.55	1	385580	5.98	Wardha	Wardha	Anji	122	N-20.804069 E-78.432181	ZJ	NT
	Nagpur	Wardha							4.43	1	385580	17.08				127	N-20.803122 E-78.430614	ZJ	NT
	Nagpur	Wardha							0.11	1	385580	0.42				255	N-20.803925 E-78.435710	ZJ	NT
	Nagpur	Wardha							0.49	1	385580	1.89				256	N-20.801844 E-78.433822	ZJ	NT
	Nagpur	Wardha							28.94	1	385580	111.59				83	N-20.793708 E-78.4804	ZJ	NT
	Nagpur	Wardha							0.34	1	385580	1.31				85	N-20.793715 E-78.482991	ZJ	NT
	Nagpur	Wardha							0.28	1	385580	1.08				86	N-20.792753 E-78.486222	ZJ	NT
	Nagpur	Wardha							0.09	1	385580	0.35				179	N-20.801883 E-78.594572	ZJ	NT
			Total for Wardha Divison						**66.14**	**14**		**255.02**							
2	Nagpur	Nagpur	National Highway No.7 (MP/ Maharashtra Bordes to Mansar Jn) (Km 652 to 723 KM)	11462	G.O.I.Letter No 864/2013 FC15.05.2015	49.246	Letter No 864/2013 FC	check Naka and Maintance	0	0	0	34.79	Nagpur	Deolapar/	Manegaon	481 R.F	N 21.659109 E079.410002		-
													Nagpur	Deolapar/	Karvhi	484 R.F	N 21.39600 E079.241900		-
													Nagpur	Paoni	Paoni	-			-
								Corridor Maintanace	0	0	0	93.33	Nagpur	Deolapar/	Karvhi	484 R.F	N 21.39600 E079.241900		-
													Nagpur	Deolapar/	Manegaon	481 R.F	N 21.659109 E079.410002		-
													Nagpur	Deolapar/	Manegaon	485 R.F	N 21.3903 E079.2405		-

Sr. No.	Circle	Division	Name of the Project	Project ID	Final sanction	Project Area (ha)	Details/ Particulars of work as per stipulated condition		Total Area/Total Quantum of specified work mentioned in col. 11	Total No of sites with respect to column. 12	Rate per unit (Rs.)	Amount (Rs. Lakhs)	Details of Area to be treated						
							Condition no. in the sanction letter	Particulars of works					Range	Round	Beat	Compartment no.	Latlong	Wheter forest land or non - forest land	Tribal /remote area or non-tribal area
1	2	3	4	5	6	7	8	9	10	11	12	13	14	15	16	17	18	19	20
	Nagpur	Nagpur	National Highway No.7 (MP/ Maharashtra Bordes to Mansar Jn) (Km 652 to 723 KM)	11462	G.O.I.Letter No 864/2013 FC15.05.2015	49.246	Letter No 864/2013 FC	Corridor Maintanace	0	0	0		Nagpur	Deolapar/	Deolapar/	487 R.F	N 21.626132 E079.390551		-
													Nagpur	Deolapar/	Deolapar/	487 R.F	N 21.628321 E079.396737		-
													Nagpur	Deolapar/	Manegaon	481 R.F	N 21.659109 E079.410002		-
													Nagpur	Deolapar/	Manegaon	482 R.F	N 21.659109 E079.410002		-
													Nagpur	Deolapar/	Manegaon	482 R.F			-
													Nagpur	Deolapar/	Karvhi	484 R.F	N 21.39600 E079.241900		-
													Nagpur	Deolapar/	Manegaon	485 R.F			-
													Nagpur	Deolapar/	Karvhi	484 R.F	N 21.39600 E079.241900		-
													Nagpur	Deolapar/	Manegaon	481, 482 R.F	N 21.659109 E079.410002		-
													Nagpur	Deolapar/	Deolapar/	494 R.F			-
													Nagpur	Paoni	Mogra	269, 270,420, 422,267			-
													Nagpur	Paoni	Paoni	422 R.F	N 21.332307 E079.212013		-
													Nagpur	Paoni	Paoni	419 R.F			-
													Nagpur	Paoni	Mogra	751 N R.F	N 21.294946 E079.193847		-
													Nagpur	Paoni	Mogra	269 PF	N 21.294168 E079.193402		-
													Nagpur	Paoni	Mogra	269 PF	N 21.294168 E079.193402		-
								Public Awareness	0	0	0		Nagpur	Paoni / Deolapar	-	-			-

Sr. No.	Circle	Division	Name of the Project	Project ID	Final sanction	Project Area (ha)	Details/ Particulars of work as per stipulated condition		Total Area/Total Quantum of specified work mentioned in col. 11	Total No of sites with respect to column. 12	Rate per unit (Rs.)	Amount (Rs. Lakhs)	Details of Area to be treated						
							Condition no. in the sanction letter	Particulars of works					Range	Round	Beat	Compartment no.	Latlong	Wheter forest land or non - forest land	Tribal /remote area or non-tribal area
1	2	3	4	5	6	7	8	9	10	11	12	13	14	15	16	17	18	19	20
	Nagpur	Nagpur	National Highway No.7 (MP/ Maharashtra Bordes to Mansar Jn) (Km 652 to 723 KM)	11462	G.O.I.Letter No 864/2013 FC15.05.2015	49.246	Letter No 864/2013 FC	Livelihood					Nagpur	Paoni / Deolapar	-	-			-
								Maintance of Water Hole	0	0	0	19.42	Nagpur	Deolapar	Deolapar	488 R.F	N 21.625814 E 79.401875		-
													Nagpur	Deolapar	Deolapar	487 R.F	N 21.629241 E079.401651		-
													Nagpur	Deolapar	Deolapar	487 R.F	N 21.627615 E 79.400966		-
								Water Sourec Creatation	0	0	0	25.14	Nagpur	Deolapar	Karvhi	744 N R.F	N 21.637285 E079.475278		-
													Nagpur	Deolapar	Karvhi	474 R.F	N 21.643031 E079.464588		-
													Nagpur	Deolapar	Deolapar	490 R.F	N 21.3700 E079.2549		-
													Nagpur	Deolapar	Karvhi	484 R.F	N 21.39600 E079.241900		-
													Nagpur	Deolapar	Karvhi	744 R.F	N 21.637285 E079.475278		-
													Nagpur	Deolapar	Karvhi	474 R.F	N 21.643031 E079.464588		-
													Nagpur	Deolapar	Deolapar	490 R.F	N 21.3700 E079.2549		-
													Nagpur	Deolapar	Karvhi	744N R.F	N 21.3834 E079.2937		-
													Nagpur	Deolapar	Karvhi	474 R.F	N 21.6451 E079.4687		-
													Nagpur	Deolapar	Deolapar	490 R.F	N 21.3600 E079.2500		-
													Nagpur	Paoni	Paoni	414 R.F	N 21.29403 E079.21405		-
													Nagpur	Paoni	Chorbhuli	271 P.F	N 21.273618 E079.18315		-
													Nagpur	Paoni	Salai	235 R.F	N 21.480152 E079.453667		-

Sr. No.	Circle	Division	Name of the Project	Project ID	Final sanction	Project Area (ha)	Details/ Particulars of work as per stipulated condition		Total Area/Total Quantum of specified work mentioned in col. 11	Total No of sites with respect to column. 12	Rate per unit (Rs.)	Amount (Rs. Lakhs)	Details of Area to be treated						
							Condition no. in the sanction letter	Particulars of works					Range	Round	Beat	Compartment no.	Latlong	Wheter forest land or non - forest land	Tribal /remote area or non-tribal area
1	2	3	4	5	6	7	8	9	10	11	12	13	14	15	16	17	18	19	20
	Nagpur	Nagpur	National Highway No.7 (MP/ Maharashtra Bordes to Mansar Jn) (Km 652 to 723 KM)	11462	G.O.I.Letter No 864/2013 FC15.05.2015	49.246	Letter No 864/2013 FC	Water Sourec Creatation	0	0	0		Nagpur	Paoni	Salai	239 R.F	N 21.49682 E079.46756		-
													Nagpur	Paoni	Paoni	414 R.F	N 21.29403 E079.21405		-
													Nagpur	Paoni	Chorbhuli	271 P.F	N 21.273618 E079.18315		-
													Nagpur	Paoni	Salai	435 R.F	N 21.480152 E079.453667		-
													Nagpur	Paoni	Salai	439R.F	N 21.49682 E079.46756		-
													Nagpur	Deolapar	Salai	-			-
								Protection Hut	0	0	0	14.99	Nagpur	Deolapar	Deolapar	278 P.F	N 21.34654 E079.22471		-
														Deolapar	Deolapar	493 P.F	N 21.35378 E079.23586		-
								Habitat/Meadow	0	0	0	26.17	Nagpur	Deolapar	Karvahi	484 P.F	N 21.3852 E079.2417		-
														Deolapar	bandra/S. Manegaon	485/481 R.F			-
			Total for Wardha Divison			**49.246**						**213.84**							
			Grand total of Nagpur circle						**66.14**	**14**		**468.86**							
11	Thane	Roha	Nagaloli Leghupat Bandhare Yojana, Sathvan Talao	12380	State Govt.FLD/13/15/No.219/F-1024.02.2020	6.5 ha.	12	Embedding Cement Pillars around the area No.40	6.5	1	0.75	1.64	Shriwardhan	Borli Panchatan	Asuf	Section 35	N017.99.03 E0730343 N017.9987 E73.0190 N18036067 E73013271	Sec 35 Land	Non Tribal
	Thane	Roha					25	Bird Nests	6.5	1	0.46	0.46	Shriwardhan	Borli Panchatan	Asuf	Section 35	N181106.89 E0725852.44	Sec 35 Land	Non Tribal
			Total for Roha Divison						**13**	**2**		**2.10**							
			Total for Thane Circle						**13**	**2**		**2.10**							
			Grand Total of Conditional Other Works							**26**		**713.97**							

Abstract of

Implementing Agency wise provision under

NPV and Interest

Abstract for Circle wise allocation of NPV & Interest Component under APO 2022-23

(Rs. in Lakhs)

Sr. No.	Implementing Agencies	NPV (04)	Interest (05)	Total (3+4)
1	**2**	**3**	**4**	**5**
1	CCF (T) Amravati	6,130.50	-	**6,130.50**
2	CCF (T) Aurangabad	1,465.00	-	**1,465.00**
3	CCF (T) Chandrapur	1,210.00	-	**1,210.00**
4	CCF (T) Dhule	2,535.00	-	**2,535.00**
5	CCF (T) Gadchiroli	3,288.00	-	**3,288.00**
6	CCF (T) Kolhapur	1,738.50	-	**1,738.50**
7	CCF (T) Nagpur	4,542.00	-	**4,542.00**
8	CCF (T) Nashik	4,477.50	-	**4,477.50**
9	CCF (T) Pune	3,686.00	-	**3,686.00**
10	CCF (T) Thane	2,461.00	-	**2,461.00**
11	CCF (T) Yavatmal	3,733.00	-	**3,733.00**
Total for Territorial Wing (1 to 11)		**35,266.50**	**-**	**35,266.50**
12	PCCF (WL) M.S. Nagpur	16,840.00	-	**16,840.00**
13	APCCF (WL) East, Nagpur	2,754.00	-	**2,754.00**
14	APCCF (WL) West, Mumbai	1,398.50	-	**1,398.50**
15	CCF & FD, MTR, Amravati	4,100.00	-	**4,100.00**
Total for Wildlife Wing (12 to 15)		**25,092.50**	**-**	**25,092.50**
16	PCCF (ITP) M.S. Nagpur	950.00	-	**950.00**
17	APCCF, Mangrove Cell, Mumbai	40.00	-	**40.00**
18	APCCF (RET) Pune	2,203.00	-	**2,203.00**
19	CCF (Evaluation) Nagpur	2.00	-	**2.00**
20	PIO, Nagpur	150.00	-	**150.00**
21	CEO, Maha CAMPA	1,072.00	2,350.00	**3,422.00**
Grand Total		**64,776.00**	**2,350.00**	**67,126.00**

Annexure – VII – A

(Item-wise & Division-wise Abstract of NPV)

ANNUAL PLAN OF OPERATIONS 2022-23						COMPONENT WISE ALLOTMENT FOR NPV WORKS									
Annexure-VII-A						(Amount in Rs. Lakhs)									
Rule No.	Particulars of work	Proposed for APO 2022-23			%	Territorial Circles									
						Amravati									
						Amravati		Melghat (Paratwada)		Buldhana		Akola		Total	
		Unit in	Phy	Fin		Phy	Fin	Phy	Fin	Phy	Fin	Phy	Fin	Phy	Fin
1	2	3	4	5	6	7	8	9	10	11	12	13	14	15	16
5 (2)	**Works under Not less than 80 % component (Rule 5 (2))**														
5(2)(a)	**Assisted Natural Regeneration**														
i	PPO Works	**Ha**	**1321.000**	**2232.00**	**3.45**									**0.00**	**0.00**
ii	FYO Works	**Ha**	**820.000**	**572.00**	**0.88**			80.00	75.00			50.00	47.00	**130.00**	**122.00**
	Total of 5(2)(a)		**2141.000**	**2804.00**	**4.33**	**0.00**	**0.00**	**80.00**	**75.00**	**0.00**	**0.00**	**50.00**	**47.00**	**130.00**	**122.00**
5(2)(b)	**Artificial Regeneration**														
i	Artificial Regeneration (PPO) (Mission Melghat)	**Ha.**	**75.000**	**82.50**	**0.13**			75.00	82.50					**75.00**	**82.50**
ii	Artificial Regeneration 4th YO Works	**Ha**	**8531.930**	**1537.00**	**2.37**	480.00	86.00	175.00	32.00	250.00	45.00	111.00	20.00	**1016.00**	**183.00**
iii	Plantation along river banks (as per ICFRE DPR) (National Authority Scheme)	**LS**	**0**	**300.00**	**0.46**									**0.00**	**0.00**
iv	Afforestation in scrub and barren land (National Authority Scheme) LIDAR	**Ha**	**350.000**	**663.00**	**1.02**	350.00	663.00							**350.00**	**663.00**
v	Gramvan Plantation (Maintenance)	**Ha**	**61.000**	**11.00**	**0.02**									**0.00**	**0.00**
	Total for Artificial Regeneration		**9017.930**	**2593.50**	**4.00**	**830.00**	**749.00**	**250.00**	**114.50**	**250.00**	**45.00**	**111.00**	**20.00**	**1441.00**	**928.50**
5(2)(c)	**Silvicultural operations in forests**														
i	Fodder Development (PPO Works)	**Ha**	**1466.360**	**3343.00**	**5.16**	150.00	342.00			240.00	547.00	110.00	251.00	**500.00**	**1140.00**
ii	Fodder Development (PPO Works) (Mission Melghat)	**Ha**	**200.000**	**200.00**	**0.31**	150.00	150.00	50.00	50.00					**200.00**	**200.00**
iii	Fodder Development (FYO Works)	**Ha**	**1874.000**	**2023.00**	**3.12**	130.00	140.00			305.00	329.00	110.00	119.00	**545.00**	**588.00**
iv	Fodder Development (SYO Works)	**Ha**	**2703.000**	**1975.00**	**3.05**	80.00	58.00			200.00	146.00			**280.00**	**204.00**
v	Cutback Operations	**Ha**	**90.000**	**8.00**	**0.01**									**0.00**	**0.00**
	Total for Silvicultural operations in forests		**6333.360**	**7549.00**	**11.65**	**510.00**	**690.00**	**50.00**	**50.00**	**745.00**	**1022.00**	**220.00**	**370.00**	**1525.00**	**2132.00**

Rule No.	Particulars of work	Proposed for APO 2022-23			%	Territorial Circles									
						Amravati									
						Amravati		Melghat (Paratwada)		Buldhana		Akola		Total	
		Unit in	Phy	Fin		Phy	Fin	Phy	Fin	Phy	Fin	Phy	Fin	Phy	Fin
1	2	3	4	5	6	7	8	9	10	11	12	13	14	15	16
	Forest Protection														
5(2)(d)	**Protection of plantations and forests**														
i	Encroachment removal & Forest Protection	**Rmt**	**33054**	**1041.00**	**1.61**							40.00	8.00	**40.00**	**8.00**
ii	Survey, Demarcation & Fencing of Sensitive forest areas	**Rmt**	**70874**	**2834.00**	**4.38**							82.00	106.00	**82.00**	**106.00**
iii	Boundary Pillar Class I	**No.**	**18427**	**1475.00**	**2.28**	150.00	12.00					400.00	32.00	**550.00**	**44.00**
iv	Boundary Pillar Class I I	**No.**	**10304**	**413.00**	**0.64**	150.00	6.00					400.00	16.00	**550.00**	**22.00**
v	Construction, upgradation and maintenance of :														
(a)	Protection camps/Protection Huts	**No.**	**79**	**1580.00**	**2.44**	4.00	80.00			2.00	40.00			**6.00**	**120.00**
(b)	Forest Custody	**No.**	**6**	**138.00**	**0.21**							1.00	23.00	**1.00**	**23.00**
(c)	Labour Shed	**No.**	**48**	**316.00**	**0.49**	4.00	24.00					3.00	18.00	**7.00**	**42.00**
vi	Construction, upgradation and maintenance of Protection camps/Protection Huts/Forest Custody/Labour Shed (Mission Melghat)	**No.**		**340.00**	**0.52**									**0.00**	**0.00**
vii	Establishment and maintenance of wireless networks	**No.**	**59**	**116.00**	**0.18**									**0.00**	**0.00**
viii	Establishment and maintenance of wireless networks (Mission Melghat)	**No.**	**24**	**60.00**	**0.09**			4.00	10.00					**4.00**	**10.00**
ix	Improving mobility of frontline staff for forest protection & patrolling.	**LS**	**0**	**148.00**	**0.23**		2.00		2.00		2.00		2.00	**0.00**	**8.00**
	Total for Protection of plantations and forests		**132875**	**8461.00**	**13.06**	**308.00**	**124.00**	**4.00**	**12.00**	**2.00**	**42.00**	**926.00**	**205.00**	**1240.00**	**383.00**
5(2)(e)	**Pest and disease control in forest**	**Ha.**	**63**	**2.00**	**0.00**									**0.00**	**0.00**
5(2)(f)	**Forest fire prevention and control operations**														
i	Cutting and burning of fire lines	**Km**	**26362**	**766.00**	**1.18**			167.38	7.00			273.00	5.00	**440.38**	**12.00**
ii	Fire watchers	**No.**	**28431**	**750.00**	**1.16**							80.00	9.00	**80.00**	**9.00**
	Total for Forest fire prevention and control operations		**54793**	**1516.00**	**2.34**	**0.00**	**0.00**	**167.38**	**7.00**	**0.00**	**0.00**	**353.00**	**14.00**	**520.38**	**21.00**
	Total for Forest Protection		**187731**	**9979.00**	**15.41**	**308.00**	**124.00**	**171.38**	**19.00**	**2.00**	**42.00**	**1279.00**	**219.00**	**1760.38**	**404.00**

Rule No.	Particulars of work	Proposed for APO 2022-23			%	Territorial Circles									
						Amravati									
						Amravati		Melghat (Paratwada)		Buldhana		Akola		Total	
		Unit in	Phy	Fin		Phy	Fin	Phy	Fin	Phy	Fin	Phy	Fin	Phy	Fin
1	2	3	4	5	6	7	8	9	10	11	12	13	14	15	16
5(2)(g)	**Soil and moisture conservation works in the forest**														
i	Construction of Gabiyan Bandhara	**No.**	**1141**	**588.00**	**0.91**	50.00	25.00			50.00	25.00			**100.00**	**50.00**
ii	Construction of Gabiyan Bandhara (Mission Melghat)	**No.**	**654**	**261.50**	**0.40**	109.00	43.50	100.00	40.00					**209.00**	**83.50**
iii	Construction of Cement Bandhare	**No.**	**158**	**2370.00**	**3.66**									**0.00**	**0.00**
iv	Construction of Cement Bandhare (Mission Melghat)	**No.**	**80**	**800.00**	**1.24**	10.00	100.00	10.00	100.00					**20.00**	**200.00**
v	Construction of check dams	**No.**	**81**	**52.00**	**0.08**					10.00	4.50			**10.00**	**4.50**
vi	Creation of Forest ponds/Vantale/Khodtadi	**No.**	**379**	**1137.00**	**1.76**	5.00	15.00			20.00	60.00			**25.00**	**75.00**
vii	Deep CCT	**Ha/Rmt**	**1253 / 3345**	**769.00**	**1.19**	25.00	30.00	175.00	68.00					**200.00**	**98.00**
viii	Earthen/Mati Nala Bunds	**No.**	**247**	**747.00**	**1.15**					15.00	45.00	2.00	6.00	**17.00**	**51.00**
ix	Construction of LBS Structure (Mission Melghat)	**No.**	**500**	**90.00**	**0.14**	100.00	18.00	100.00	18.00					**200.00**	**36.00**
x	**Soil and Water Conservation / Harvesting works (National Authority Scheme) LIDAR (As per santioned DPR)**	**LS**	**0**	**1000.00**	**1.54**		1000.00							**0.00**	**1000.00**
	Total for SMC works		**3240**	**7814.50**	**12.06**	**299.00**	**1231.50**	**385.00**	**226.00**	**95.00**	**134.50**	**2.00**	**6.00**	**781.00**	**1598.00**
	Wildlife Management & Man-animal conflict mitigation														
5(2)(h)	**Voluntary relocation of villages from Protected areas (including cost of land and other property of the field owners)**	**No.**	**48**	**10000.00**	**15.44**									**0.00**	**0.00**
5(2)(i)	**Improvement of wildlife habitat as provided in the approved wildlife management plan or working plan**														
i	All wildlife Management works will be carried out as per approved Management plan	**No.**	**15**	**4000.00**	**6.18**									**0.00**	**0.00**
ii	Medow development	**Ha.**	**2809.370**	**784.00**	**1.21**									**0.00**	**0.00**
iii	Creation & maintenance of water sources/water holes for wildlife	**No.**	**1142**	**764.00**	**1.18**	25.00	69.00							**25.00**	**69.00**
iv	Creation & maintenance of water sources/water holes for wildlife (Mission Melghat)	**No.**		**120.00**	**0.19**		20.00		20.00					**0.00**	**40.00**
v	Eradication of invasive species	**Ha.**	**8302.300**	**884.00**	**1.36**									**0.00**	**0.00**
vi	Eradication of invasive species (Mission Melghat)	**Ha.**	**1600.000**	**272.00**	**0.42**									**0.00**	**0.00**
	Total for Improvement of wildlife habitat		**13869**	**6824.00**	**10.53**	**25.00**	**89.00**	**0.00**	**20.00**	**0.00**	**0.00**	**0.00**	**0.00**	**25.00**	**109.00**

Rule No.	Particulars of work	Proposed for APO 2022-23			%	Territorial Circles									
						Amravati									
						Amravati		Melghat (Paratwada)		Buldhana		Akola		Total	
		Unit in	Phy	Fin		Phy	Fin	Phy	Fin	Phy	Fin	Phy	Fin	Phy	Fin
1	2	3	4	5	6	7	8	9	10	11	12	13	14	15	16
5(2)(j)	Planting and rejuvenation of forest cover on non-forest land falling in wildlife corridors	LS	0	3.00	0.00									0.00	0.00
5(2)(k)	**Establishment, operation and maintenance of animal rescue centre and veterinary treatment facilities for wild animals**														
i	Establishment, operation and maintenance of animal rescue centre/ Transit treatment Centre (Imcluding Provision for Gorewada)	No./LS	13	1377.00	2.13	1.00	80.00					4.00	20.00	5.00	100.00
ii	Veterinary treatment facilities for wild animals (Imcluding Provision for Gorewada)	No./LS	4	304.00	0.47		10.00							0.00	10.00
iii	Animal seizing & capturing devices	No./LS	189	406.00	0.63		10.00							0.00	10.00
iv	Rescue emergency operations	No./LS	6	426.00	0.66		5.00							0.00	5.00
v	Strengthening of Rapid rescue teams	No./LS	6	197.00	0.30		20.00							0.00	20.00
vi	Management of rewilding of tiger cubs	LS	0	40.00	0.06									0.00	0.00
	Total		218	2750.00	4.25	1.00	125.00	0.00	0.00	0.00	0.00	4.00	20.00	5.00	145.00
5(2)(l)	Supply of wood-saving cooking appliances and other forest produce saving devices in forest fringe villages as specified by the National Authority from time to time	No.	7250	135.00	0.21									0.00	0.00
	Total for Wildlife Management & Man-animal conflict mitigation		21385	19712.00	30.43	26.00	214.00	0.00	20.00	0.00	0.00	4.00	20.00	30.00	254.00
5(2)(m)	**Management of biological diversity and biological resource**														
i	New research projects and Maintenance of Ongoing Project by research wing of Maharashtra Forest Department	No.	11	357.00	0.55									0.00	0.00
ii	Base studies for forestry and wildlife related subjects	No.	4	158.00	0.24									0.00	0.00
iii	Conservation of Wildlife like GIB, Wild buffalo, Turtle, Vultures, Owl, Sparrow, etc.	No.	5	877.00	1.35									0.00	0.00
	Total		20	1392.00	2.15	0.00	0.00	0.00	0.00	0.00	0.00	0.00	0.00	0.00	0.00
	Grand Total for Activities under not less than 80% component		229868	51844.00	80.04	1973.00	3008.50	936.38	504.50	1092.00	1243.50	1666.00	682.00	5667.38	5438.50

Rule No.	Particulars of work	Proposed for APO 2022-23			%	Territorial Circles									
						Amravati									
						Amravati		Melghat (Paratwada)		Buldhana		Akola		Total	
		Unit in	Phy	Fin		Phy	Fin	Phy	Fin	Phy	Fin	Phy	Fin	Phy	Fin
1	2	3	4	5	6	7	8	9	10	11	12	13	14	15	16
5 (3)	**Works under not more than 20 % component (Rule 5 (3))**														
5(3)(a)(i)	**Establishment, up-gradation and maintenance of modern nurseries and other planting stock production facilities for production of quality planting materials**	**No.**	**10**	**150.00**	**0.23**									**0.00**	**0.00**
5(3)(a)(ii)	**Establishment, up-gradation and maintenance of modern nurseries and other planting stock production facilities for production of quality planting materials (Mission Melghat)**	**No.**		**90.00**	**0.14**		40.00		50.00					**0.00**	**90.00**
	Total of 5(3)(a)		**10**	**240.00**	**0.37**	**0.00**	**40.00**	**0.00**	**50.00**	**0.00**	**0.00**	**0.00**	**0.00**	**0.00**	**90.00**
5(3)(b)	**Promoting conservation, sustainable use and documentation of biological diversity including preservation of habitats, conservation of land and folk varieties and cultivars, domesticated stocks and breeds of animals and microorganisms and chronicling of knowledge relating to biological diversity**														
i	Documentation and Publications of study materials for FTIs	**LS**	**0**	**60.00**	**0.09**									**0.00**	**0.00**
ii	Conducting Workshops/Trainings/Seminars/ Conferences for promoting conservation & sustainable use of biological diversity and capacity building of the frontline staff & officers.	**No.**	**48**	**165.00**	**0.25**									**0.00**	**0.00**
iii	Capacity building and gender sensitization of Forest Staff's through FTI /TERI/Forest academies/other institutions/CFRMC/JFMC /PRI	**No.**	**476**	**2000.00**	**3.09**									**0.00**	**0.00**
iv	Improving training inputs through guest faculties in Forest Training Institutes / Forest Academies	**LS**	**0**	**20.00**	**0.03**									**0.00**	**0.00**
	Total		**524**	**2245.00**	**3.47**	**0.00**	**0.00**	**0.00**	**0.00**	**0.00**	**0.00**	**0.00**	**0.00**	**0.00**	**0.00**
5(3)(c)	Purchase and maintenance of equipment or devices used for communication and information technology for the purpose of protection of forest and wildlife/AMC		**0**	**950.00**	**1.47**									**0.00**	**0.00**
5(3)(d)	**Construction, up-gradation and maintenance of :**														
i	Inspection paths/Forest roads in forest area,	**Km/No**	**1121**	**296.00**	**0.46**									**0.00**	**0.00**
ii	flush causway	**No.**	**101**	**380.00**	**0.59**									**0.00**	**0.00**
iii	watch towers,	**No.**	**30**	**300.00**	**0.46**					1.00	10.00			**1.00**	**10.00**
iv	Check posts/Check Naka	**No.**	**11**	**99.00**	**0.15**									**0.00**	**0.00**
v	**Construction, up-gradation and maintenance of Inspection paths/Forest roads in forest area/flush causway/watch towers /Check posts/Check Naka (Mission Melghat)**	**No.**		**210.00**	**0.32**		25.00		25.00					**0.00**	**50.00**
	Total of 5(3)(d)		**1263**	**1285.00**	**1.98**	**0.00**	**25.00**	**0.00**	**25.00**	**1.00**	**10.00**	**0.00**	**0.00**	**1.00**	**60.00**

Rule No.	Particulars of work	Proposed for APO 2022-23			%	Territorial Circles									
						Amravati									
						Amravati		Melghat (Paratwada)		Buldhana		Akola		Total	
		Unit in	Phy	Fin		Phy	Fin	Phy	Fin	Phy	Fin	Phy	Fin	Phy	Fin
1	2	3	4	5	6	7	8	9	10	11	12	13	14	15	16
5(3)(e)	**Construction of residential and official buildings in forests for front line staffs deployed for protection of forest and wildlife**														
i	Construction of Type I Quarters	**No.**	**91**	**2002.00**	**3.09**	2.00	44.00	2.00	44.00	2.00	44.00			**6.00**	**132.00**
ii	Construction of Type-1 (G+2) 4 Units Residental Building for Special Tiger Protection Force (STPF)	**No.**	**3**	**541.00**	**0.84**									**0.00**	**0.00**
iii	Construction of Type II Quarters	**No.**	**48**	**1248.00**	**1.93**	1.00	26.00	1.00	26.00	1.00	26.00	1.00	26.00	**4.00**	**104.00**
iv	Construction of Type III Quarters	**No.**	**36**	**1296.00**	**2.00**	1.00	36.00	1.00	36.00			1.00	36.00	**3.00**	**108.00**
v	Construction of Range office	**No.**	**38**	**1709.00**	**2.64**	1.00	45.00	1.00	45.00	1.00	45.00			**3.00**	**135.00**
vi	Amenities for Woman Front line staff	**No.**	**19**	**266.00**	**0.41**									**0.00**	**0.00**
	Total New Constructions		**235**	**7062.00**	**10.90**	**5.00**	**151.00**	**5.00**	**151.00**	**4.00**	**115.00**	**2.00**	**62.00**	**16.00**	**479.00**
5(3)(f)(i)	Casual engagement of local people or labours to assist regular staff of State Forest Department for works for protection of forest and wildlife undertaken from State Fund	**No.**	**0**	**80.00**	**0.12**									**0.00**	**0.00**
5(3)(f)(ii)	Casual engagement of local people or labours to assist regular staff of State Forest Department for works for protection of forest and wildlife undertaken from State Fund (Mission Melghat)	**No.**	**0**	**225.00**	**0.35**		25.00		30.00					**0.00**	**55.00**
5(3)(g)	Survey and mapping of forest areas for forest fire control, compensatory afforestation works, soil and moisture conservation, catchment area treatment and wildlife management for preparing annual plans to be executed from the State Fund	**LS**	**0**	**100.00**	**0.15**									**0.00**	**0.00**
5(3)(h)	Independent concurrent monitoring and evaluation and third party monitoring of various works undertaken from State Fund	**LS**	**0**	**202.00**	**0.31**									**0.00**	**0.00**
5(3)(i)	Publicity-cum-awareness programme and exhibition on the various schemes being implemented by the State Authority from State Fund (including Nature Awareness Program conduct by METDB)	**LS**	**0**	**343.00**	**0.53**		2.00		2.00		2.00		2.00	**0.00**	**8.00**
5(3)(j)	Production and distribution of quality planting material through certified nurseries at subsidized price for promotion of trees outside forests on Government lands promoted by State Government {Saplings for planned afforestation activities in the area under control / management of the Central Armed Police Forces (CAPFs) (As per National Authority Instructions)}	**LS**	**0**	**200.00**	**0.31**									**0.00**	**0.00**
5(3)(k)	forest certification and development of certification standards	**LS**	**0**	**0.00**	**0.00**									**0.00**	**0.00**
	Total for works under not more than 20% component		**2032.33**	**12932.00**	**19.96**	**5.00**	**243.00**	**5.00**	**258.00**	**5.00**	**127.00**	**2.00**	**64.00**	**17.00**	**692.00**
	Grand Total for NPV			**64776.00**	**100.00**		**3251.50**		**762.50**		**1370.50**		**746.00**		**6130.50**

ANNUAL PLAN OF OPERATIONS 2022-23						COMPONENT WISE ALLOTMENT FOR NPV WORKS													
Annexure-VII-A						(Amount in Rs. Lakhs)													
Rule No.	Particulars of work	Proposed for APO 2022-23			%	Territorial Circles													
						Aurangabad													
						Aurangabad		Nanded		Parbhani		Beed		Usmanabad		Hingoli		Total	
		Unit in	Phy	Fin		Phy	Fin	Phy	Fin	Phy	Fin	Phy	Fin	Phy	Fin	Phy	Fin	Phy	Fin
1	2	3	4	5	6	17	18	19	20	21	22	23	24	25	26	27	28	29	30
5 (2)	**Works under Not less than 80 % component (Rule 5 (2))**																		
5(2)(a)	**Assisted Natural Regeneration**																		
i	PPO Works	**Ha**	**1321.000**	**2232.00**	**3.45**													**0.00**	**0.00**
ii	FYO Works	**Ha**	**820.000**	**572.00**	**0.88**													**0.00**	**0.00**
	Total of 5(2)(a)		**2141.000**	**2804.00**	**4.33**	**0.00**	**0.00**	**0.00**	**0.00**	**0.00**	**0.00**	**0.00**	**0.00**	**0.00**	**0.00**	**0.00**	**0.00**	**0.00**	**0.00**
5(2)(b)	**Artificial Regeneration**																		
i	Artificial Regeneration (PPO) (Mission Melghat)	**Ha.**	**75.000**	**82.50**	**0.13**														
ii	Artificial Regeneration 4th YO Works	**Ha**	**8531.930**	**1537.00**	**2.37**	200.00	36.00	85.00	15.00	120.00	22.00	170.00	31.00			35.00	6.00	**610.00**	**110.00**
iii	Plantation along river banks (as per ICFRE DPR) (National Authority Scheme)	**LS**	**0**	**300.00**	**0.46**													**0.00**	**0.00**
iv	Afforestation in scrub and barren land (National Authority Scheme) LIDAR	**Ha**	**350.000**	**663.00**	**1.02**													**0.00**	**0.00**
v	Gramvan Plantation (Maintenance)	**Ha**	**61.000**	**11.00**	**0.02**													**0.00**	**0.00**
	Total for Artificial Regeneration		**9017.930**	**2593.50**	**4.00**	**200.00**	**36.00**	**85.00**	**15.00**	**120.00**	**22.00**	**170.00**	**31.00**	**0.00**	**0.00**	**35.00**	**6.00**	**610.00**	**110.00**
5(2)(c)	**Silvicultural operations in forests**																		
i	Fodder Development (PPO Works)	**Ha**	**1466.360**	**3343.00**	**5.16**							80.00	182.00					**80.00**	**182.00**
ii	Fodder Development (PPO Works) (Mission Melghat)	**Ha**	**200.000**	**200.00**	**0.31**													**0.00**	**0.00**
iii	Fodder Development (FYO Works)	**Ha**	**1874.000**	**2023.00**	**3.12**													**0.00**	**0.00**
iv	Fodder Development (SYO Works)	**Ha**	**2703.000**	**1975.00**	**3.05**	200.00	146.00					120.00	88.00			40.00	29.00	**360.00**	**263.00**
v	Cutback Operations	**Ha**	**90.000**	**8.00**	**0.01**													**0.00**	**0.00**
	Total for Silvicultural operations in forests		**6333.360**	**7549.00**	**11.65**	**200.00**	**146.00**	**0.00**	**0.00**	**0.00**	**0.00**	**200.00**	**270.00**	**0.00**	**0.00**	**40.00**	**29.00**	**440.00**	**445.00**

Rule No.	Particulars of work	Proposed for APO 2022-23			%	Territorial Circles													
						Aurangabad													
						Aurangabad		Nanded		Parbhani		Beed		Usmanabad		Hingoli		Total	
		Unit in	Phy	Fin		Phy	Fin	Phy	Fin	Phy	Fin	Phy	Fin	Phy	Fin	Phy	Fin	Phy	Fin
1	2	3	4	5	6	17	18	19	20	21	22	23	24	25	26	27	28	29	30
	Forest Protection																		
5(2)(d)	**Protection of plantations and forests**																		
i	Encroachment removal & Forest Protection	**Rmt**	**33054**	**1041.00**	**1.61**													**0.00**	**0.00**
ii	Survey, Demarcation & Fencing of Sensitive forest areas	**Rmt**	**70874**	**2834.00**	**4.38**	25.00	69.00	1.00	30.00			2000.00	30.00					**2026.00**	**129.00**
iii	Boundary Pillar Class I	**No.**	**18427**	**1475.00**	**2.28**													**0.00**	**0.00**
iv	Boundary Pillar Class I I	**No.**	**10304**	**413.00**	**0.64**													**0.00**	**0.00**
v	Construction, upgradation and maintenance of :																		
(a)	Protection camps/Protection Huts	**No.**	**79**	**1580.00**	**2.44**													**0.00**	**0.00**
(b)	Forest Custody	**No.**	**6**	**138.00**	**0.21**											1.00	23.00	**1.00**	**23.00**
(c)	Labour Shed	**No.**	**48**	**316.00**	**0.49**			3.00	18.00									**3.00**	**18.00**
vi	Construction, upgradation and maintenance of Protection camps/Protection Huts/Forest Custody/Labour Shed (Mission Melghat)	**No.**		**340.00**	**0.52**														
vii	Establishment and maintenance of wireless networks	**No.**	**59**	**116.00**	**0.18**													**0.00**	**0.00**
viii	Establishment and maintenance of wireless networks (Mission Melghat)	**No.**	**24**	**60.00**	**0.09**													**0.00**	**0.00**
ix	Improving mobility of frontline staff for forest protection & patrolling.	**LS**	**0**	**148.00**	**0.23**		2.00		2.00		2.00		2.00		2.00		2.00	**0.00**	**12.00**
	Total for Protection of plantations and forests		**132875**	**8461.00**	**13.06**	**25.00**	**71.00**	**4.00**	**50.00**	**0.00**	**2.00**	**2000.00**	**32.00**	**0.00**	**2.00**	**1.00**	**25.00**	**2030.00**	**182.00**
5(2)(e)	**Pest and disease control in forest**	**Ha.**	**63**	**2.00**	**0.00**													**0.00**	**0.00**
5(2)(f)	**Forest fire prevention and control operations**																		
i	Cutting and burning of fire lines	**Km**	**26362**	**766.00**	**1.18**													**0.00**	**0.00**
ii	Fire watchers	**No.**	**28431**	**750.00**	**1.16**													**0.00**	**0.00**
	Total for Forest fire prevention and control operations		**54793**	**1516.00**	**2.34**	**0.00**	**0.00**	**0.00**	**0.00**	**0.00**	**0.00**	**0.00**	**0.00**	**0.00**	**0.00**	**0.00**	**0.00**	**0.00**	**0.00**
	Total for Forest Protection		**187731**	**9979.00**	**15.41**	**25.00**	**71.00**	**4.00**	**50.00**	**0.00**	**2.00**	**2000.00**	**32.00**	**0.00**	**2.00**	**1.00**	**25.00**	**2030.00**	**182.00**

Rule No.	Particulars of work	Proposed for APO 2022-23			%	Territorial Circles													
						Aurangabad													
						Aurangabad		Nanded		Parbhani		Beed		Usmanabad		Hingoli		Total	
		Unit in	Phy	Fin		Phy	Fin	Phy	Fin	Phy	Fin	Phy	Fin	Phy	Fin	Phy	Fin	Phy	Fin
1	2	3	4	5	6	17	18	19	20	21	22	23	24	25	26	27	28	29	30
5(2)(g)	**Soil and moisture conservation works in the forest**																		
i	Construction of Gabiyan Bandhara	**No.**	**1141**	**588.00**	**0.91**	35.00	35.00	36.00	18.00									**71.00**	**53.00**
ii	Construction of Gabiyan Bandhara (Mission Melghat)	**No.**	**654**	**261.50**	**0.40**													**0.00**	**0.00**
iii	Construction of Cement Bandhare	**No.**	**158**	**2370.00**	**3.66**													**0.00**	**0.00**
iv	Construction of Cement Bandhare (Mission Melghat)	**No.**	**80**	**800.00**	**1.24**													**0.00**	**0.00**
v	Construction of check dams	**No.**	**81**	**52.00**	**0.08**													**0.00**	**0.00**
vi	Creation of Forest ponds/Vantale/Khodtadi	**No.**	**379**	**1137.00**	**1.76**							3.00	9.00			20.00	60.00	**23.00**	**69.00**
vii	Deep CCT	**Ha/Rmt**	**1253 / 3345**	**769.00**	**1.19**							9.00	27.00			10.00	6.00	**19.00**	**33.00**
viii	Earthen/Mati Nala Bunds	**No.**	**247**	**747.00**	**1.15**	15.00	45.00					3.00	9.00			3.00	9.00	**21.00**	**63.00**
ix	Construction of LBS Structure (Mission Melghat)	**No.**	**500**	**90.00**	**0.14**													**0.00**	**0.00**
x	**Soil and Water Conservation / Harvesting works (National Authority Scheme) LIDAR (As per santioned DPR)**	**LS**	**0**	**1000.00**	**1.54**													**0.00**	**0.00**
	Total for SMC works		**3240**	**7814.50**	**12.06**	**50.00**	**80.00**	**36.00**	**18.00**	**0.00**	**0.00**	**15.00**	**45.00**	**0.00**	**0.00**	**33.00**	**75.00**	**134.00**	**218.00**
	Wildlife Management & Man-animal conflict mitigation																		
5(2)(h)	**Voluntary relocation of villages from Protected areas (including cost of land and other property of the field owners)**	**No.**	**48**	**10000.00**	**15.44**													**0.00**	**0.00**
5(2)(i)	**Improvement of wildlife habitat as provided in the approved wildlife management plan or working plan**																		
i	All wildlife Management works will be carried out as per approved Management plan	**No.**	**15**	**4000.00**	**6.18**													**0.00**	**0.00**
ii	Medow development	**Ha.**	**2809.370**	**784.00**	**1.21**													**0.00**	**0.00**
iii	Creation & maintenance of water sources/water holes for wildlife	**No.**	**1142**	**764.00**	**1.18**													**0.00**	**0.00**
iv	Creation & maintenance of water sources/water holes for wildlife (Mission Melghat)	**No.**		**120.00**	**0.19**													**0.00**	**0.00**
v	Eradication of invasive species	**Ha.**	**8302.300**	**884.00**	**1.36**													**0.00**	**0.00**
vi	Eradication of invasive species (Mission Melghat)	**Ha.**	**1600.000**	**272.00**	**0.42**													**0.00**	**0.00**
	Total for Improvement of wildlife habitat		**13869**	**6824.00**	**10.53**	**0.00**	**0.00**	**0.00**	**0.00**	**0.00**	**0.00**	**0.00**	**0.00**	**0.00**	**0.00**	**0.00**	**0.00**	**0.00**	**0.00**

Rule No.	Particulars of work	Proposed for APO 2022-23			%	Territorial Circles													
						Aurangabad													
						Aurangabad		Nanded		Parbhani		Beed		Usmanabad		Hingoli		Total	
		Unit in	Phy	Fin		Phy	Fin	Phy	Fin	Phy	Fin	Phy	Fin	Phy	Fin	Phy	Fin	Phy	Fin
1	2	3	4	5	6	17	18	19	20	21	22	23	24	25	26	27	28	29	30
5(2)(j)	Planting and rejuvenation of forest cover on non-forest land falling in wildlife corridors	LS	0	3.00	0.00													0.00	0.00
5(2)(k)	**Establishment, operation and maintenance of animal rescue centre and veterinary treatment facilities for wild animals**																		
i	Establishment, operation and maintenance of animal rescue centre/ Transit treatment Centre (Imcluding Provision for Gorewada)	No./LS	13	1377.00	2.13													0.00	0.00
ii	Veterinary treatment facilities for wild animals (Imcluding Provision for Gorewada)	No./LS	4	304.00	0.47													0.00	0.00
iii	Animal seizing & capturing devices	No./LS	189	406.00	0.63													0.00	0.00
iv	Rescue emergency operations	No./LS	6	426.00	0.66													0.00	0.00
v	Strengthening of Rapid rescue teams	No./LS	6	197.00	0.30													0.00	0.00
vi	Management of rewilding of tiger cubs	LS	0	40.00	0.06													0.00	0.00
	Total		218	2750.00	4.25	0.00	0.00	0.00	0.00	0.00	0.00	0.00	0.00	0.00	0.00	0.00	0.00	0.00	0.00
5(2)(l)	Supply of wood-saving cooking appliances and other forest produce saving devices in forest fringe villages as specified by the National Authority from time to time	No.	7250	135.00	0.21													0.00	0.00
	Total for Wildlife Management & Man-animal conflict mitigation		21385	19712.00	30.43	0.00	0.00	0.00	0.00	0.00	0.00	0.00	0.00	0.00	0.00	0.00	0.00	0.00	0.00
5(2)(m)	**Management of biological diversity and biological resource**																		
i	New research projects and Maintenance of Ongoing Project by research wing of Maharashtra Forest Department	No.	11	357.00	0.55													0.00	0.00
ii	Base studies for forestry and wildlife related subjects	No.	4	158.00	0.24													0.00	0.00
iii	Conservation of Wildlife like GIB, Wild buffalo, Turtle, Vultures, Owl, Sparrow, etc.	No.	5	877.00	1.35													0.00	0.00
	Total		20	1392.00	2.15	0.00	0.00	0.00	0.00	0.00	0.00	0.00	0.00	0.00	0.00	0.00	0.00	0.00	0.00
	Grand Total for Activities under not less than 80% component		229868	51844.00	80.04	475.00	333.00	125.00	83.00	120.00	24.00	2385.00	378.00	0.00	2.00	109.00	135.00	3214.00	955.00

Rule No.	Particulars of work	Proposed for APO 2022-23			%	Territorial Circles													
						Aurangabad													
						Aurangabad		Nanded		Parbhani		Beed		Usmanabad		Hingoli		Total	
		Unit in	Phy	Fin		Phy	Fin	Phy	Fin	Phy	Fin	Phy	Fin	Phy	Fin	Phy	Fin	Phy	Fin
1	2	3	4	5	6	17	18	19	20	21	22	23	24	25	26	27	28	29	30
5 (3)	**Works under not more than 20 % component (Rule 5 (3))**																		
5(3)(a)(i)	**Establishment, up-gradation and maintenance of modern nurseries and other planting stock production facilities for production of quality planting materials**	**No.**	**10**	**150.00**	**0.23**													**0.00**	**0.00**
5(3)(a)(ii)	**Establishment, up-gradation and maintenance of modern nurseries and other planting stock production facilities for production of quality planting materials (Mission Melghat)**	**No.**		**90.00**	**0.14**													**0.00**	**0.00**
	Total of 5(3)(a)		**10**	**240.00**	**0.37**	**0.00**	**0.00**	**0.00**	**0.00**	**0.00**	**0.00**	**0.00**	**0.00**	**0.00**	**0.00**	**0.00**	**0.00**	**0.00**	**0.00**
5(3)(b)	**Promoting conservation, sustainable use and documentation of biological diversity including preservation of habitats, conservation of land and folk varieties and cultivars, domesticated stocks and breeds of animals and microorganisms and chronicling of knowledge relating to biological diversity**																		
i	Documentation and Publications of study materials for FTIs	**LS**	**0**	**60.00**	**0.09**													**0.00**	**0.00**
ii	Conducting Workshops/Trainings/Seminars/ Conferences for promoting conservation & sustainable use of biological diversity and capacity building of the frontline staff & officers.	**No.**	**48**	**165.00**	**0.25**													**0.00**	**0.00**
iii	Capacity building and gender sensitization of Forest Staff's through FTI /TERI/Forest academies/other institutions/CFRMC/JFMC /PRI	**No.**	**476**	**2000.00**	**3.09**													**0.00**	**0.00**
iv	Improving training inputs through guest faculties in Forest Training Institutes / Forest Academies	**LS**	**0**	**20.00**	**0.03**													**0.00**	**0.00**
	Total		**524**	**2245.00**	**3.47**	**0.00**	**0.00**	**0.00**	**0.00**	**0.00**	**0.00**	**0.00**	**0.00**	**0.00**	**0.00**	**0.00**	**0.00**	**0.00**	**0.00**
5(3)(c)	Purchase and maintenance of equipment or devices used for communication and information technology for the purpose of protection of forest and wildlife/AMC		**0**	**950.00**	**1.47**													**0.00**	**0.00**
5(3)(d)	**Construction, up-gradation and maintenance of :**																		
i	Inspection paths/Forest roads in forest area,	**Km/No**	**1121**	**296.00**	**0.46**													**0.00**	**0.00**
ii	flush causway	**No.**	**101**	**380.00**	**0.59**													**0.00**	**0.00**
iii	watch towers,	**No.**	**30**	**300.00**	**0.46**			1.00	10.00							2.00	20.00	**3.00**	**30.00**
iv	Check posts/Check Naka	**No.**	**11**	**99.00**	**0.15**											1.00	9.00	**1.00**	**9.00**
v	**Construction, up-gradation and maintenance of Inspection paths/Forest roads in forest area/flush causway/watch towers /Check posts/Check Naka (Mission Melghat)**	**No.**		**210.00**	**0.32**													**0.00**	**0.00**
	Total of 5(3)(d)		**1263**	**1285.00**	**1.98**	**0.00**	**0.00**	**1.00**	**10.00**	**0.00**	**0.00**	**0.00**	**0.00**	**0.00**	**0.00**	**3.00**	**29.00**	**4.00**	**39.00**

Rule No.	Particulars of work	Proposed for APO 2022-23			%	Territorial Circles													
						Aurangabad													
						Aurangabad		Nanded		Parbhani		Beed		Usmanabad		Hingoli		Total	
		Unit in	Phy	Fin		Phy	Fin	Phy	Fin	Phy	Fin	Phy	Fin	Phy	Fin	Phy	Fin	Phy	Fin
1	2	3	4	5	6	17	18	19	20	21	22	23	24	25	26	27	28	29	30
5(3)(e)	**Construction of residential and official buildings in forests for front line staffs deployed for protection of forest and wildlife**																		
i	Construction of Type I Quarters	**No.**	**91**	**2002.00**	**3.09**	2.00	44.00	2.00	44.00							2.00	44.00	**6.00**	**132.00**
ii	Construction of Type-1 (G+2) 4 Units Residental Building for Special Tiger Protection Force (STPF)	**No.**	**3**	**541.00**	**0.84**													**0.00**	**0.00**
iii	Construction of Type II Quarters	**No.**	**48**	**1248.00**	**1.93**	1.00	26.00	1.00	26.00							1.00	26.00	**3.00**	**78.00**
iv	Construction of Type III Quarters	**No.**	**36**	**1296.00**	**2.00**	1.00	36.00	1.00	36.00									**2.00**	**72.00**
v	Construction of Range office	**No.**	**38**	**1709.00**	**2.64**	1.00	45.00	1.00	45.00							1.00	45.00	**3.00**	**135.00**
vi	Amenities for Woman Front line staff	**No.**	**19**	**266.00**	**0.41**	1.00	14.00	1.00	14.00							1.00	14.00	**3.00**	**42.00**
	Total New Constructions		**235**	**7062.00**	**10.90**	**6.00**	**165.00**	**6.00**	**165.00**	**0.00**	**0.00**	**0.00**	**0.00**	**0.00**	**0.00**	**5.00**	**129.00**	**17.00**	**459.00**
5(3)(f)(i)	Casual engagement of local people or labours to assist regular staff of State Forest Department for works for protection of forest and wildlife undertaken from State Fund	**No.**	**0**	**80.00**	**0.12**													**0.00**	**0.00**
5(3)(f)(ii)	Casual engagement of local people or labours to assist regular staff of State Forest Department for works for protection of forest and wildlife undertaken from State Fund (Mission Melghat)	**No.**	**0**	**225.00**	**0.35**													**0.00**	**0.00**
5(3)(g)	Survey and mapping of forest areas for forest fire control, compensatory afforestation works, soil and moisture conservation, catchment area treatment and wildlife management for preparing annual plans to be executed from the State Fund	**LS**	**0**	**100.00**	**0.15**													**0.00**	**0.00**
5(3)(h)	Independent concurrent monitoring and evaluation and third party monitoring of various works undertaken from State Fund	**LS**	**0**	**202.00**	**0.31**													**0.00**	**0.00**
5(3)(i)	Publicity-cum-awareness programme and exhibition on the various schemes being implemented by the State Authority from State Fund (including Nature Awareness Program conduct by METDB)	**LS**	**0**	**343.00**	**0.53**		2.00		2.00		2.00		2.00		2.00		2.00	**0.00**	**12.00**
5(3)(j)	Production and distribution of quality planting material through certified nurseries at subsidized price for promotion of trees outside forests on Government lands promoted by State Government {Saplings for planned afforestation activities in the area under control / management of the Central Armed Police Forces (CAPFs) (As per National Authority Instructions)}	**LS**	**0**	**200.00**	**0.31**													**0.00**	**0.00**
5(3)(k)	forest certification and development of certification standards	**LS**	**0**	**0.00**	**0.00**													**0.00**	**0.00**
	Total for works under not more than 20% component		**2032.33**	**12932.00**	**19.96**	**6.00**	**167.00**	**7.00**	**177.00**	**0.00**	**2.00**	**0.00**	**2.00**	**0.00**	**2.00**	**8.00**	**160.00**	**21.00**	**510.00**
	Grand Total for NPV			**64776.00**	**100.00**		**500.00**		**260.00**		**26.00**		**380.00**		**4.00**		**295.00**		**1465.00**

ANNUAL PLAN OF OPERATIONS 2022-23						COMPONENT WISE ALLOTMENT FOR NPV WORKS							
Annexure-VII-A												(Amount in Rs. Lakhs)	
Rule No.	Particulars of work	Proposed for APO 2022-23			%	Territorial Circles							
						Chandrapur							
						Chandrapur		Central Chanda		Bramhapuri		Total	
		Unit in	Phy	Fin		Phy	Fin	Phy	Fin	Phy	Fin	Phy	Fin
1	2	3	4	5	6	31	32	33	34	35	36	37	38
5 (2)	**Works under Not less than 80 % component (Rule 5 (2))**												
5(2)(a)	**Assisted Natural Regeneration**												
i	PPO Works	**Ha**	**1321.000**	**2232.00**	**3.45**							**0.00**	**0.00**
ii	FYO Works	**Ha**	**820.000**	**572.00**	**0.88**							**0.00**	**0.00**
	Total of 5(2)(a)		**2141.000**	**2804.00**	**4.33**	**0.00**	**0.00**	**0.00**	**0.00**	**0.00**	**0.00**	**0.00**	**0.00**
5(2)(b)	**Artificial Regeneration**												
i	Artificial Regeneration (PPO) (Mission Melghat)	**Ha.**	**75.000**	**82.50**	**0.13**								
ii	Artificial Regeneration 4th YO Works	**Ha**	**8531.930**	**1537.00**	**2.37**	105.00	19.00	180.00	32.00	200.00	36.00	**485.00**	**87.00**
iii	Plantation along river banks (as per ICFRE DPR) (National Authority Scheme)	**LS**	**0**	**300.00**	**0.46**							**0.00**	**0.00**
iv	Afforestation in scrub and barren land (National Authority Scheme) LIDAR	**Ha**	**350.000**	**663.00**	**1.02**							**0.00**	**0.00**
v	Gramvan Plantation (Maintenance)	**Ha**	**61.000**	**11.00**	**0.02**							**0.00**	**0.00**
	Total for Artificial Regeneration		**9017.930**	**2593.50**	**4.00**	**105.00**	**19.00**	**180.00**	**32.00**	**200.00**	**36.00**	**485.00**	**87.00**
5(2)(c)	**Silvicultural operations in forests**												
i	Fodder Development (PPO Works)	**Ha**	**1466.360**	**3343.00**	**5.16**							**0.00**	**0.00**
ii	Fodder Development (PPO Works) (Mission Melghat)	**Ha**	**200.000**	**200.00**	**0.31**							**0.00**	**0.00**
iii	Fodder Development (FYO Works)	**Ha**	**1874.000**	**2023.00**	**3.12**			95.00	103.00			**95.00**	**103.00**
iv	Fodder Development (SYO Works)	**Ha**	**2703.000**	**1975.00**	**3.05**	25.00	18.00					**25.00**	**18.00**
v	Cutback Operations	**Ha**	**90.000**	**8.00**	**0.01**							**0.00**	**0.00**
	Total for Silvicultural operations in forests		**6333.360**	**7549.00**	**11.65**	**25.00**	**18.00**	**95.00**	**103.00**	**0.00**	**0.00**	**120.00**	**121.00**

Rule No.	Particulars of work	Proposed for APO 2022-23			%	Territorial Circles							
						Chandrapur							
						Chandrapur		Central Chanda		Bramhapuri		Total	
		Unit in	Phy	Fin		Phy	Fin	Phy	Fin	Phy	Fin	Phy	Fin
1	2	3	4	5	6	31	32	33	34	35	36	37	38
	Forest Protection												
5(2)(d)	**Protection of plantations and forests**												
i	Encroachment removal & Forest Protection	**Rmt**	**33054**	**1041.00**	**1.61**			100.00	37.00			**100.00**	**37.00**
ii	Survey, Demarcation & Fencing of Sensitive forest areas	**Rmt**	**70874**	**2834.00**	**4.38**				70.00	7.00	103.00	**7.00**	**173.00**
iii	Boundary Pillar Class I	**No.**	**18427**	**1475.00**	**2.28**	100.00	8.00	600.00	48.00			**700.00**	**56.00**
iv	Boundary Pillar Class I I	**No.**	**10304**	**413.00**	**0.64**	87.00	4.00	300.00	12.00			**387.00**	**16.00**
v	Construction, upgradation and maintenance of :												
(a)	Protection camps/Protection Huts	**No.**	**79**	**1580.00**	**2.44**			1.00	20.00	5.00	100.00	**6.00**	**120.00**
(b)	Forest Custody	**No.**	**6**	**138.00**	**0.21**							**0.00**	**0.00**
(c)	Labour Shed	**No.**	**48**	**316.00**	**0.49**			4.00	24.00			**4.00**	**24.00**
vi	Construction, upgradation and maintenance of Protection camps/Protection Huts/Forest Custody/Labour Shed (Mission Melghat)	**No.**		**340.00**	**0.52**								
vii	Establishment and maintenance of wireless networks	**No.**	**59**	**116.00**	**0.18**	2.00	2.00					**2.00**	**2.00**
viii	Establishment and maintenance of wireless networks (Mission Melghat)	**No.**	**24**	**60.00**	**0.09**							**0.00**	**0.00**
ix	Improving mobility of frontline staff for forest protection & patrolling.	**LS**	**0**	**148.00**	**0.23**		2.00		2.00		2.00	**0.00**	**6.00**
	Total for Protection of plantations and forests		**132875**	**8461.00**	**13.06**	**189.00**	**16.00**	**1005.00**	**213.00**	**12.00**	**205.00**	**1206.00**	**434.00**
5(2)(e)	**Pest and disease control in forest**	**Ha.**	**63**	**2.00**	**0.00**							**0.00**	**0.00**
5(2)(f)	**Forest fire prevention and control operations**												
i	Cutting and burning of fire lines	**Km**	**26362**	**766.00**	**1.18**			2847.66	85.00	728.00	13.00	**3575.66**	**98.00**
ii	Fire watchers	**No.**	**28431**	**750.00**	**1.16**			2340.00	10.00	92.00	38.00	**2432.00**	**48.00**
	Total for Forest fire prevention and control operations		**54793**	**1516.00**	**2.34**	**0.00**	**0.00**	**5187.66**	**95.00**	**820.00**	**51.00**	**6007.66**	**146.00**
	Total for Forest Protection		**187731**	**9979.00**	**15.41**	**189.00**	**16.00**	**6192.66**	**308.00**	**832.00**	**256.00**	**7213.66**	**580.00**

Rule No.	Particulars of work	Proposed for APO 2022-23			%	Territorial Circles							
						Chandrapur							
						Chandrapur		Central Chanda		Bramhapuri		Total	
		Unit in	Phy	Fin		Phy	Fin	Phy	Fin	Phy	Fin	Phy	Fin
1	2	3	4	5	6	31	32	33	34	35	36	37	38
5(2)(g)	**Soil and moisture conservation works in the forest**												
i	Construction of Gabiyan Bandhara	No.	1141	588.00	0.91							0.00	0.00
ii	Construction of Gabiyan Bandhara (Mission Melghat)	No.	654	261.50	0.40							0.00	0.00
iii	Construction of Cement Bandhare	No.	158	2370.00	3.66					1.00	15.00	1.00	15.00
iv	Construction of Cement Bandhare (Mission Melghat)	No.	80	800.00	1.24							0.00	0.00
v	Construction of check dams	No.	81	52.00	0.08							0.00	0.00
vi	Creation of Forest ponds/Vantale/Khodtadi	No.	379	1137.00	1.76			20.00	60.00	25.00	75.00	45.00	135.00
vii	Deep CCT	Ha/Rmt	1253 / 3345	769.00	1.19							0.00	0.00
viii	Earthen/Mati Nala Bunds	No.	247	747.00	1.15							0.00	0.00
ix	Construction of LBS Structure (Mission Melghat)	No.	500	90.00	0.14							0.00	0.00
x	**Soil and Water Conservation / Harvesting works (National Authority Scheme) LIDAR (As per santioned DPR)**	LS	0	1000.00	1.54							0.00	0.00
	Total for SMC works		3240	7814.50	12.06	0.00	0.00	20.00	60.00	26.00	90.00	46.00	150.00
	Wildlife Management & Man-animal conflict mitigation												
5(2)(h)	**Voluntary relocation of villages from Protected areas (including cost of land and other property of the field owners)**	No.	48	10000.00	15.44							0.00	0.00
5(2)(i)	**Improvement of wildlife habitat as provided in the approved wildlife management plan or working plan**												
i	All wildlife Management works will be carried out as per approved Management plan	No.	15	4000.00	6.18							0.00	0.00
ii	Medow development	Ha.	2809.370	784.00	1.21							0.00	0.00
iii	Creation & maintenance of water sources/water holes for wildlife	No.	1142	764.00	1.18							0.00	0.00
iv	Creation & maintenance of water sources/water holes for wildlife (Mission Melghat)	No.		120.00	0.19							0.00	0.00
v	Eradication of invasive species	Ha.	8302.300	884.00	1.36							0.00	0.00
vi	Eradication of invasive species (Mission Melghat)	Ha.	1600.000	272.00	0.42							0.00	0.00
	Total for Improvement of wildlife habitat		13869	6824.00	10.53	0.00	0.00	0.00	0.00	0.00	0.00	0.00	0.00

Rule No.	Particulars of work	Proposed for APO 2022-23			%	Territorial Circles							
						Chandrapur							
						Chandrapur		Central Chanda		Bramhapuri		Total	
		Unit in	Phy	Fin		Phy	Fin	Phy	Fin	Phy	Fin	Phy	Fin
1	2	3	4	5	6	31	32	33	34	35	36	37	38
5(2)(j)	Planting and rejuvenation of forest cover on non-forest land falling in wildlife corridors	LS	0	3.00	0.00							0.00	0.00
5(2)(k)	**Establishment, operation and maintenance of animal rescue centre and veterinary treatment facilities for wild animals**												
i	Establishment, operation and maintenance of animal rescue centre/ Transit treatment Centre (Imcluding Provision for Gorewada)	No./LS	13	1377.00	2.13							0.00	0.00
ii	Veterinary treatment facilities for wild animals (Imcluding Provision for Gorewada)	No./LS	4	304.00	0.47							0.00	0.00
iii	Animal seizing & capturing devices	No./LS	189	406.00	0.63			5.00	3.00			5.00	3.00
iv	Rescue emergency operations	No./LS	6	426.00	0.66				5.00		10.00	0.00	15.00
v	Strengthening of Rapid rescue teams	No./LS	6	197.00	0.30				1.00			0.00	1.00
vi	Management of rewilding of tiger cubs	LS	0	40.00	0.06							0.00	0.00
	Total		218	2750.00	4.25	0.00	0.00	5.00	9.00	0.00	10.00	5.00	19.00
5(2)(l)	Supply of wood-saving cooking appliances and other forest produce saving devices in forest fringe villages as specified by the National Authority from time to time	No.	7250	135.00	0.21							0.00	0.00
	Total for Wildlife Management & Man-animal conflict mitigation		21385	19712.00	30.43	0.00	0.00	5.00	9.00	0.00	10.00	5.00	19.00
5(2)(m)	**Management of biological diversity and biological resource**												
i	New research projects and Maintenance of Ongoing Project by research wing of Maharashtra Forest Department	No.	11	357.00	0.55							0.00	0.00
ii	Base studies for forestry and wildlife related subjects	No.	4	158.00	0.24							0.00	0.00
iii	Conservation of Wildlife like GIB, Wild buffalo, Turtle, Vultures, Owl, Sparrow, etc.	No.	5	877.00	1.35							0.00	0.00
	Total		20	1392.00	2.15	0.00	0.00	0.00	0.00	0.00	0.00	0.00	0.00
	Grand Total for Activities under not less than 80% component		229868	51844.00	80.04	319.00	53.00	6492.66	512.00	1058.00	392.00	7869.66	957.00

Rule No.	Particulars of work	Proposed for APO 2022-23			%	Territorial Circles							
						Chandrapur							
						Chandrapur		Central Chanda		Bramhapuri		Total	
		Unit in	Phy	Fin		Phy	Fin	Phy	Fin	Phy	Fin	Phy	Fin
1	2	3	4	5	6	31	32	33	34	35	36	37	38
5 (3)	**Works under not more than 20 % component (Rule 5 (3))**												
5(3)(a)(i)	**Establishment, up-gradation and maintenance of modern nurseries and other planting stock production facilities for production of quality planting materials**	**No.**	**10**	**150.00**	**0.23**							**0.00**	**0.00**
5(3)(a)(ii)	**Establishment, up-gradation and maintenance of modern nurseries and other planting stock production facilities for production of quality planting materials (Mission Melghat)**	**No.**		**90.00**	**0.14**							**0.00**	**0.00**
	Total of 5(3)(a)		**10**	**240.00**	**0.37**	**0.00**	**0.00**	**0.00**	**0.00**	**0.00**	**0.00**	**0.00**	**0.00**
5(3)(b)	**Promoting conservation, sustainable use and documentation of biological diversity including preservation of habitats, conservation of land and folk varieties and cultivars, domesticated stocks and breeds of animals and microorganisms and chronicling of knowledge relating to biological diversity**												
i	Documentation and Publications of study materials for FTIs	**LS**	**0**	**60.00**	**0.09**							**0.00**	**0.00**
ii	Conducting Workshops/Trainings/Seminars/ Conferences for promoting conservation & sustainable use of biological diversity and capacity building of the frontline staff & officers.	**No.**	**48**	**165.00**	**0.25**							**0.00**	**0.00**
iii	Capacity building and gender sensitization of Forest Staff's through FTI /TERI/Forest academies/other institutions/CFRMC/JFMC /PRI	**No.**	**476**	**2000.00**	**3.09**							**0.00**	**0.00**
iv	Improving training inputs through guest faculties in Forest Training Institutes / Forest Academies	**LS**	**0**	**20.00**	**0.03**							**0.00**	**0.00**
	Total		**524**	**2245.00**	**3.47**	**0.00**	**0.00**	**0.00**	**0.00**	**0.00**	**0.00**	**0.00**	**0.00**
5(3)(c)	Purchase and maintenance of equipment or devices used for communication and information technology for the purpose of protection of forest and wildlife/AMC		**0**	**950.00**	**1.47**							**0.00**	**0.00**
5(3)(d)	**Construction, up-gradation and maintenance of :**												
i	Inspection paths/Forest roads in forest area,	**Km/No**	**1121**	**296.00**	**0.46**	5.00	3.00					**5.00**	**3.00**
ii	flush causway	**No.**	**101**	**380.00**	**0.59**							**0.00**	**0.00**
iii	watch towers,	**No.**	**30**	**300.00**	**0.46**					2.00	20.00	**2.00**	**20.00**
iv	Check posts/Check Naka	**No.**	**11**	**99.00**	**0.15**							**0.00**	**0.00**
v	**Construction, up-gradation and maintenance of Inspection paths/Forest roads in forest area/flush causway/watch towers /Check posts/Check Naka (Mission Melghat)**	**No.**		**210.00**	**0.32**							**0.00**	**0.00**
	Total of 5(3)(d)		**1263**	**1285.00**	**1.98**	**5.00**	**3.00**	**0.00**	**0.00**	**2.00**	**20.00**	**7.00**	**23.00**

Rule No.	Particulars of work	Proposed for APO 2022-23			%	Territorial Circles							
						Chandrapur							
						Chandrapur		Central Chanda		Bramhapuri		Total	
		Unit in	Phy	Fin		Phy	Fin	Phy	Fin	Phy	Fin	Phy	Fin
1	2	3	4	5	6	31	32	33	34	35	36	37	38
5(3)(e)	**Construction of residential and official buildings in forests for front line staffs deployed for protection of forest and wildlife**												
i	Construction of Type I Quarters	**No.**	**91**	**2002.00**	**3.09**	2.00	44.00	2.00	44.00	2.00	44.00	**6.00**	**132.00**
ii	Construction of Type-1 (G+2) 4 Units Residental Building for Special Tiger Protection Force (STPF)	**No.**	**3**	**541.00**	**0.84**							**0.00**	**0.00**
iii	Construction of Type II Quarters	**No.**	**48**	**1248.00**	**1.93**	1.00	26.00	1.00	26.00	1.00	26.00	**3.00**	**78.00**
iv	Construction of Type III Quarters	**No.**	**36**	**1296.00**	**2.00**							**0.00**	**0.00**
v	Construction of Range office	**No.**	**38**	**1709.00**	**2.64**							**0.00**	**0.00**
vi	Amenities for Woman Front line staff	**No.**	**19**	**266.00**	**0.41**					1.00	14.00	**1.00**	**14.00**
	Total New Constructions		**235**	**7062.00**	**10.90**	**3.00**	**70.00**	**3.00**	**70.00**	**4.00**	**84.00**	**10.00**	**224.00**
5(3)(f)(i)	Casual engagement of local people or labours to assist regular staff of State Forest Department for works for protection of forest and wildlife undertaken from State Fund	**No.**	**0**	**80.00**	**0.12**							**0.00**	**0.00**
5(3)(f)(ii)	Casual engagement of local people or labours to assist regular staff of State Forest Department for works for protection of forest and wildlife undertaken from State Fund (Mission Melghat)	**No.**	**0**	**225.00**	**0.35**							**0.00**	**0.00**
5(3)(g)	Survey and mapping of forest areas for forest fire control, compensatory afforestation works, soil and moisture conservation, catchment area treatment and wildlife management for preparing annual plans to be executed from the State Fund	**LS**	**0**	**100.00**	**0.15**							**0.00**	**0.00**
5(3)(h)	Independent concurrent monitoring and evaluation and third party monitoring of various works undertaken from State Fund	**LS**	**0**	**202.00**	**0.31**							**0.00**	**0.00**
5(3)(i)	Publicity-cum-awareness programme and exhibition on the various schemes being implemented by the State Authority from State Fund (including Nature Awareness Program conduct by METDB)	**LS**	**0**	**343.00**	**0.53**		2.00		2.00		2.00	**0.00**	**6.00**
5(3)(j)	Production and distribution of quality planting material through certified nurseries at subsidized price for promotion of trees outside forests on Government lands promoted by State Government {Saplings for planned afforestation activities in the area under control / management of the Central Armed Police Forces (CAPFs) (As per National Authority Instructions)}	**LS**	**0**	**200.00**	**0.31**							**0.00**	**0.00**
5(3)(k)	forest certification and development of certification standards	**LS**	**0**	**0.00**	**0.00**							**0.00**	**0.00**
	Total for works under not more than 20% component		**2032.33**	**12932.00**	**19.96**	**8.00**	**75.00**	**3.00**	**72.00**	**6.00**	**106.00**	**17.00**	**253.00**
	Grand Total for NPV			**64776.00**	**100.00**		**128.00**		**584.00**		**498.00**		**1210.00**

ANNUAL PLAN OF OPERATIONS 2022-23						COMPONENT WISE ALLOTMENT FOR NPV WORKS											
Annexure-VII-A						(Amount in Rs. Lakhs)											
Rule No.	Particulars of work	Proposed for APO 2022-23			%	Territorial Circles											
						Dhule											
						Dhule		Nandurbar		Mewasi		Jalgaon		Yawal		Total	
		Unit in	Phy	Fin		Phy	Fin	Phy	Fin	Phy	Fin	Phy	Fin	Phy	Fin	Phy	Fin
1	2	3	4	5	6	39	40	41	42	43	44	45	46	47	48	49	50
5 (2)	**Works under Not less than 80 % component (Rule 5 (2))**																
5(2)(a)	**Assisted Natural Regeneration**																
i	PPO Works	**Ha**	**1321.000**	**2232.00**	**3.45**											**0.00**	**0.00**
ii	FYO Works	**Ha**	**820.000**	**572.00**	**0.88**											**0.00**	**0.00**
	Total of 5(2)(a)		**2141.000**	**2804.00**	**4.33**	**0.00**	**0.00**	**0.00**	**0.00**	**0.00**	**0.00**	**0.00**	**0.00**	**0.00**	**0.00**	**0.00**	**0.00**
5(2)(b)	**Artificial Regeneration**																
i	Artificial Regeneration (PPO) (Mission Melghat)	**Ha.**	**75.000**	**82.50**	**0.13**												
ii	Artificial Regeneration 4th YO Works	**Ha**	**8531.930**	**1537.00**	**2.37**	200.00	36.00	200.00	36.00	202.00	36.00	200.00	36.00	200.00	36.00	**1002.00**	**180.00**
iii	Plantation along river banks (as per ICFRE DPR) (National Authority Scheme)	**LS**	**0**	**300.00**	**0.46**				30.00		30.00					**0.00**	**60.00**
iv	Afforestation in scrub and barren land (National Authority Scheme) LIDAR	**Ha**	**350.000**	**663.00**	**1.02**											**0.00**	**0.00**
v	Gramvan Plantation (Maintenance)	**Ha**	**61.000**	**11.00**	**0.02**							50.00	9.00			**50.00**	**9.00**
	Total for Artificial Regeneration		**9017.930**	**2593.50**	**4.00**	**200.00**	**36.00**	**200.00**	**66.00**	**202.00**	**66.00**	**250.00**	**45.00**	**200.00**	**36.00**	**1052.00**	**249.00**
5(2)(c)	**Silvicultural operations in forests**																
i	Fodder Development (PPO Works)	**Ha**	**1466.360**	**3343.00**	**5.16**							20.00	46.00			**20.00**	**46.00**
ii	Fodder Development (PPO Works) (Mission Melghat)	**Ha**	**200.000**	**200.00**	**0.31**											**0.00**	**0.00**
iii	Fodder Development (FYO Works)	**Ha**	**1874.000**	**2023.00**	**3.12**											**0.00**	**0.00**
iv	Fodder Development (SYO Works)	**Ha**	**2703.000**	**1975.00**	**3.05**							310.00	226.00			**310.00**	**226.00**
v	Cutback Operations	**Ha**	**90.000**	**8.00**	**0.01**											**0.00**	**0.00**
	Total for Silvicultural operations in forests		**6333.360**	**7549.00**	**11.65**	**0.00**	**0.00**	**0.00**	**0.00**	**0.00**	**0.00**	**330.00**	**272.00**	**0.00**	**0.00**	**330.00**	**272.00**

Rule No.	Particulars of work	Proposed for APO 2022-23			%	Territorial Circles											
						Dhule											
						Dhule		Nandurbar		Mewasi		Jalgaon		Yawal		Total	
		Unit in	Phy	Fin		Phy	Fin	Phy	Fin	Phy	Fin	Phy	Fin	Phy	Fin	Phy	Fin
1	2	3	4	5	6	39	40	41	42	43	44	45	46	47	48	49	50
	Forest Protection																
5(2)(d)	**Protection of plantations and forests**																
i	Encroachment removal & Forest Protection	**Rmt**	**33054**	**1041.00**	**1.61**			175.00	44.00			20.00	12.00			**195.00**	**56.00**
ii	Survey, Demarcation & Fencing of Sensitive forest areas	**Rmt**	**70874**	**2834.00**	**4.38**			3500.00	80.00							**3500.00**	**80.00**
iii	Boundary Pillar Class I	**No.**	**18427**	**1475.00**	**2.28**			2750.00	220.00			300.00	24.00			**3050.00**	**244.00**
iv	Boundary Pillar Class I I	**No.**	**10304**	**413.00**	**0.64**			1800.00	72.00			300.00	12.00			**2100.00**	**84.00**
v	Construction, upgradation and maintenance of :																
(a)	Protection camps/Protection Huts	**No.**	**79**	**1580.00**	**2.44**	3.00	60.00	1.00	20.00							**4.00**	**80.00**
(b)	Forest Custody	**No.**	**6**	**138.00**	**0.21**											**0.00**	**0.00**
(c)	Labour Shed	**No.**	**48**	**316.00**	**0.49**	2.00	12.00									**2.00**	**12.00**
vi	Construction, upgradation and maintenance of Protection camps/Protection Huts/Forest Custody/Labour Shed (Mission Melghat)	**No.**		**340.00**	**0.52**												
vii	Establishment and maintenance of wireless networks	**No.**	**59**	**116.00**	**0.18**			11.00	5.50	6.00	1.50					**17.00**	**7.00**
viii	Establishment and maintenance of wireless networks (Mission Melghat)	**No.**	**24**	**60.00**	**0.09**											**0.00**	**0.00**
ix	Improving mobility of frontline staff for forest protection & patrolling.	**LS**	**0**	**148.00**	**0.23**		2.00		2.00		2.00		2.00		2.00	**0.00**	**10.00**
	Total for Protection of plantations and forests		**132875**	**8461.00**	**13.06**	**5.00**	**74.00**	**8237.00**	**443.50**	**6.00**	**3.50**	**620.00**	**50.00**	**0.00**	**2.00**	**8868.00**	**573.00**
5(2)(e)	**Pest and disease control in forest**	**Ha.**	**63**	**2.00**	**0.00**											**0.00**	**0.00**
5(2)(f)	**Forest fire prevention and control operations**																
i	Cutting and burning of fire lines	**Km**	**26362**	**766.00**	**1.18**	8.00	20.00	613.60	34.00							**621.60**	**54.00**
ii	Fire watchers	**No.**	**28431**	**750.00**	**1.16**	8.00	20.00	110.00	57.00					119.00	30.00	**237.00**	**107.00**
	Total for Forest fire prevention and control operations		**54793**	**1516.00**	**2.34**	**16.00**	**40.00**	**723.60**	**91.00**	**0.00**	**0.00**	**0.00**	**0.00**	**119.00**	**30.00**	**858.60**	**161.00**
	Total for Forest Protection		**187731**	**9979.00**	**15.41**	**21.00**	**114.00**	**8960.60**	**534.50**	**6.00**	**3.50**	**620.00**	**50.00**	**119.00**	**32.00**	**9726.60**	**734.00**

Rule No.	Particulars of work	Proposed for APO 2022-23			%	Territorial Circles											
						Dhule											
						Dhule		Nandurbar		Mewasi		Jalgaon		Yawal		Total	
		Unit in	Phy	Fin		Phy	Fin	Phy	Fin	Phy	Fin	Phy	Fin	Phy	Fin	Phy	Fin
1	2	3	4	5	6	39	40	41	42	43	44	45	46	47	48	49	50
5(2)(g)	**Soil and moisture conservation works in the forest**																
i	Construction of Gabiyan Bandhara	**No.**	**1141**	**588.00**	**0.91**			50.00	25.00							**50.00**	**25.00**
ii	Construction of Gabiyan Bandhara (Mission Melghat)	**No.**	**654**	**261.50**	**0.40**											**0.00**	**0.00**
iii	Construction of Cement Bandhare	**No.**	**158**	**2370.00**	**3.66**			10.00	150.00					10.00	150.00	**20.00**	**300.00**
iv	Construction of Cement Bandhare (Mission Melghat)	**No.**	**80**	**800.00**	**1.24**											**0.00**	**0.00**
v	Construction of check dams	**No.**	**81**	**52.00**	**0.08**											**0.00**	**0.00**
vi	Creation of Forest ponds/Vantale/Khodtadi	**No.**	**379**	**1137.00**	**1.76**			20.00	60.00							**20.00**	**60.00**
vii	Deep CCT	**Ha/Rmt**	**1253 / 3345**	**769.00**	**1.19**			60.00	49.00							**60.00**	**49.00**
viii	Earthen/Mati Nala Bunds	**No.**	**247**	**747.00**	**1.15**			15.00	45.00							**15.00**	**45.00**
ix	Construction of LBS Structure (Mission Melghat)	**No.**	**500**	**90.00**	**0.14**											**0.00**	**0.00**
x	**Soil and Water Conservation / Harvesting works (National Authority Scheme) LIDAR (As per santioned DPR)**	**LS**	**0**	**1000.00**	**1.54**											**0.00**	**0.00**
	Total for SMC works		**3240**	**7814.50**	**12.06**	**0.00**	**0.00**	**155.00**	**329.00**	**0.00**	**0.00**	**0.00**	**0.00**	**10.00**	**150.00**	**165.00**	**479.00**
	Wildlife Management & Man-animal conflict mitigation																
5(2)(h)	**Voluntary relocation of villages from Protected areas (including cost of land and other property of the field owners)**	**No.**	**48**	**10000.00**	**15.44**											**0.00**	**0.00**
5(2)(i)	**Improvement of wildlife habitat as provided in the approved wildlife management plan or working plan**																
i	All wildlife Management works will be carried out as per approved Management plan	**No.**	**15**	**4000.00**	**6.18**											**0.00**	**0.00**
ii	Medow development	**Ha.**	**2809.370**	**784.00**	**1.21**											**0.00**	**0.00**
iii	Creation & maintenance of water sources/water holes for wildlife	**No.**	**1142**	**764.00**	**1.18**									12.00	102.00	**12.00**	**102.00**
iv	Creation & maintenance of water sources/water holes for wildlife (Mission Melghat)	**No.**		**120.00**	**0.19**											**0.00**	**0.00**
v	Eradication of invasive species	**Ha.**	**8302.300**	**884.00**	**1.36**											**0.00**	**0.00**
vi	Eradication of invasive species (Mission Melghat)	**Ha.**	**1600.000**	**272.00**	**0.42**											**0.00**	**0.00**
	Total for Improvement of wildlife habitat		**13869**	**6824.00**	**10.53**	**0.00**	**0.00**	**0.00**	**0.00**	**0.00**	**0.00**	**0.00**	**0.00**	**12.00**	**102.00**	**12.00**	**102.00**

Rule No.	Particulars of work	Proposed for APO 2022-23			%	Territorial Circles											
						Dhule											
						Dhule		Nandurbar		Mewasi		Jalgaon		Yawal		Total	
		Unit in	Phy	Fin		Phy	Fin	Phy	Fin	Phy	Fin	Phy	Fin	Phy	Fin	Phy	Fin
1	2	3	4	5	6	39	40	41	42	43	44	45	46	47	48	49	50
5(2)(j)	Planting and rejuvenation of forest cover on non-forest land falling in wildlife corridors	LS	0	3.00	0.00											0.00	0.00
5(2)(k)	**Establishment, operation and maintenance of animal rescue centre and veterinary treatment facilities for wild animals**																
i	Establishment, operation and maintenance of animal rescue centre/ Transit treatment Centre (Imcluding Provision for Gorewada)	No./LS	13	1377.00	2.13											0.00	0.00
ii	Veterinary treatment facilities for wild animals (Imcluding Provision for Gorewada)	No./LS	4	304.00	0.47			3.00	3.00							3.00	3.00
iii	Animal seizing & capturing devices	No./LS	189	406.00	0.63	8.00	8.00	4.00	12.00							12.00	20.00
iv	Rescue emergency operations	No./LS	6	426.00	0.66		5.00	4.00	4.00							4.00	9.00
v	Strengthening of Rapid rescue teams	No./LS	6	197.00	0.30											0.00	0.00
vi	Management of rewilding of tiger cubs	LS	0	40.00	0.06											0.00	0.00
	Total		218	2750.00	4.25	8.00	13.00	11.00	19.00	0.00	0.00	0.00	0.00	0.00	0.00	19.00	32.00
5(2)(l)	Supply of wood-saving cooking appliances and other forest produce saving devices in forest fringe villages as specified by the National Authority from time to time	No.	7250	135.00	0.21											0.00	0.00
	Total for Wildlife Management & Man-animal conflict mitigation		21385	19712.00	30.43	8.00	13.00	11.00	19.00	0.00	0.00	0.00	0.00	12.00	102.00	31.00	134.00
5(2)(m)	**Management of biological diversity and biological resource**																
i	New research projects and Maintenance of Ongoing Project by research wing of Maharashtra Forest Department	No.	11	357.00	0.55											0.00	0.00
ii	Base studies for forestry and wildlife related subjects	No.	4	158.00	0.24											0.00	0.00
iii	Conservation of Wildlife like GIB, Wild buffalo, Turtle, Vultures, Owl, Sparrow, etc.	No.	5	877.00	1.35											0.00	0.00
	Total		20	1392.00	2.15	0.00	0.00	0.00	0.00	0.00	0.00	0.00	0.00	0.00	0.00	0.00	0.00
	Grand Total for Activities under not less than 80% component		229868	51844.00	80.04	229.00	163.00	9326.60	948.50	208.00	69.50	1200.00	367.00	341.00	320.00	11304.60	1868.00

Rule No.	Particulars of work	Proposed for APO 2022-23			%	Territorial Circles											
						Dhule											
						Dhule		Nandurbar		Mewasi		Jalgaon		Yawal		Total	
		Unit in	Phy	Fin		Phy	Fin	Phy	Fin	Phy	Fin	Phy	Fin	Phy	Fin	Phy	Fin
1	2	3	4	5	6	39	40	41	42	43	44	45	46	47	48	49	50
5 (3)	**Works under not more than 20 % component (Rule 5 (3))**																
5(3)(a)(i)	**Establishment, up-gradation and maintenance of modern nurseries and other planting stock production facilities for production of quality planting materials**	**No.**	**10**	**150.00**	**0.23**			5.00	50.00							**5.00**	**50.00**
5(3)(a)(ii)	**Establishment, up-gradation and maintenance of modern nurseries and other planting stock production facilities for production of quality planting materials (Mission Melghat)**	**No.**		**90.00**	**0.14**											**0.00**	**0.00**
	Total of 5(3)(a)		**10**	**240.00**	**0.37**	**0.00**	**0.00**	**5.00**	**50.00**	**0.00**	**0.00**	**0.00**	**0.00**	**0.00**	**0.00**	**5.00**	**50.00**
5(3)(b)	**Promoting conservation, sustainable use and documentation of biological diversity including preservation of habitats, conservation of land and folk varieties and cultivars, domesticated stocks and breeds of animals and microorganisms and chronicling of knowledge relating to biological diversity**																
i	Documentation and Publications of study materials for FTIs	**LS**	**0**	**60.00**	**0.09**											**0.00**	**0.00**
ii	Conducting Workshops/Trainings/Seminars/ Conferences for promoting conservation & sustainable use of biological diversity and capacity building of the frontline staff & officers.	**No.**	**48**	**165.00**	**0.25**											**0.00**	**0.00**
iii	Capacity building and gender sensitization of Forest Staff's through FTI /TERI/Forest academies/other institutions/CFRMC/JFMC /PRI	**No.**	**476**	**2000.00**	**3.09**											**0.00**	**0.00**
iv	Improving training inputs through guest faculties in Forest Training Institutes / Forest Academies	**LS**	**0**	**20.00**	**0.03**											**0.00**	**0.00**
	Total		**524**	**2245.00**	**3.47**	**0.00**	**0.00**	**0.00**	**0.00**	**0.00**	**0.00**	**0.00**	**0.00**	**0.00**	**0.00**	**0.00**	**0.00**
5(3)(c)	Purchase and maintenance of equipment or devices used for communication and information technology for the purpose of protection of forest and wildlife/AMC		**0**	**950.00**	**1.47**											**0.00**	**0.00**
5(3)(d)	**Construction, up-gradation and maintenance of :**																
i	Inspection paths/Forest roads in forest area,	**Km/No**	**1121**	**296.00**	**0.46**											**0.00**	**0.00**
ii	flush causway	**No.**	**101**	**380.00**	**0.59**											**0.00**	**0.00**
iii	watch towers,	**No.**	**30**	**300.00**	**0.46**					1.00	10.00					**1.00**	**10.00**
iv	Check posts/Check Naka	**No.**	**11**	**99.00**	**0.15**											**0.00**	**0.00**
v	**Construction, up-gradation and maintenance of Inspection paths/Forest roads in forest area/flush causway/watch towers /Check posts/Check Naka (Mission Melghat)**	**No.**		**210.00**	**0.32**											**0.00**	**0.00**
	Total of 5(3)(d)		**1263**	**1285.00**	**1.98**	**0.00**	**0.00**	**0.00**	**0.00**	**1.00**	**10.00**	**0.00**	**0.00**	**0.00**	**0.00**	**1.00**	**10.00**

Rule No.	Particulars of work	Proposed for APO 2022-23			%	Territorial Circles											
						Dhule											
						Dhule		Nandurbar		Mewasi		Jalgaon		Yawal		Total	
		Unit in	Phy	Fin		Phy	Fin	Phy	Fin	Phy	Fin	Phy	Fin	Phy	Fin	Phy	Fin
1	2	3	4	5	6	39	40	41	42	43	44	45	46	47	48	49	50
5(3)(e)	**Construction of residential and official buildings in forests for front line staffs deployed for protection of forest and wildlife**																
i	Construction of Type I Quarters	**No.**	**91**	**2002.00**	**3.09**	2.00	44.00					2.00	44.00	2.00	44.00	**6.00**	**132.00**
ii	Construction of Type-1 (G+2) 4 Units Residental Building for Special Tiger Protection Force (STPF)	**No.**	**3**	**541.00**	**0.84**											**0.00**	**0.00**
iii	Construction of Type II Quarters	**No.**	**48**	**1248.00**	**1.93**	1.00	26.00	1.00	26.00	1.00	26.00			1.00	26.00	**4.00**	**104.00**
iv	Construction of Type III Quarters	**No.**	**36**	**1296.00**	**2.00**			1.00	36.00			1.00	36.00	1.00	36.00	**3.00**	**108.00**
v	Construction of Range office	**No.**	**38**	**1709.00**	**2.64**	1.00	45.00	1.00	45.00	1.00	45.00	1.00	45.00	1.00	45.00	**5.00**	**225.00**
vi	Amenities for Woman Front line staff	**No.**	**19**	**266.00**	**0.41**			1.00	14.00			1.00	14.00			**2.00**	**28.00**
	Total New Constructions		**235**	**7062.00**	**10.90**	**4.00**	**115.00**	**4.00**	**121.00**	**2.00**	**71.00**	**5.00**	**139.00**	**5.00**	**151.00**	**20.00**	**597.00**
5(3)(f)(i)	Casual engagement of local people or labours to assist regular staff of State Forest Department for works for protection of forest and wildlife undertaken from State Fund	**No.**	**0**	**80.00**	**0.12**											**0.00**	**0.00**
5(3)(f)(ii)	Casual engagement of local people or labours to assist regular staff of State Forest Department for works for protection of forest and wildlife undertaken from State Fund (Mission Melghat)	**No.**	**0**	**225.00**	**0.35**											**0.00**	**0.00**
5(3)(g)	Survey and mapping of forest areas for forest fire control, compensatory afforestation works, soil and moisture conservation, catchment area treatment and wildlife management for preparing annual plans to be executed from the State Fund	**LS**	**0**	**100.00**	**0.15**											**0.00**	**0.00**
5(3)(h)	Independent concurrent monitoring and evaluation and third party monitoring of various works undertaken from State Fund	**LS**	**0**	**202.00**	**0.31**											**0.00**	**0.00**
5(3)(i)	Publicity-cum-awareness programme and exhibition on the various schemes being implemented by the State Authority from State Fund (including Nature Awareness Program conduct by METDB)	**LS**	**0**	**343.00**	**0.53**		2.00		2.00		2.00		2.00		2.00	**0.00**	**10.00**
5(3)(j)	Production and distribution of quality planting material through certified nurseries at subsidized price for promotion of trees outside forests on Government lands promoted by State Government {Saplings for planned afforestation activities in the area under control / management of the Central Armed Police Forces (CAPFs) (As per National Authority Instructions)}	**LS**	**0**	**200.00**	**0.31**											**0.00**	**0.00**
5(3)(k)	forest certification and development of certification standards	**LS**	**0**	**0.00**	**0.00**											**0.00**	**0.00**
	Total for works under not more than 20% component		**2032.33**	**12932.00**	**19.96**	**4.00**	**117.00**	**9.00**	**173.00**	**3.00**	**83.00**	**5.00**	**141.00**	**5.00**	**153.00**	**26.00**	**667.00**
	Grand Total for NPV			**64776.00**	**100.00**		**280.00**		**1121.50**		**152.50**		**508.00**		**473.00**		**2535.00**

ANNUAL PLAN OF OPERATIONS 2022-23						COMPONENT WISE ALLOTMENT FOR NPV WORKS											
Annexure-VII-A						(Amount in Rs. Lakhs)											
Rule No.	Particulars of work	Proposed for APO 2022-23			%	Territorial Circles											
						Gadchiroli											
						Gadchiroli		Wadsa		Allapalli		Bhamragarh		Sironcha		Total	
		Unit in	Phy	Fin		Phy	Fin	Phy	Fin	Phy	Fin	Phy	Fin	Phy	Fin	Phy	Fin
1	2	3	4	5	6	51	52	53	54	55	56	57	58	59	60	61	62
5 (2)	**Works under Not less than 80 % component (Rule 5 (2))**																
5(2)(a)	**Assisted Natural Regeneration**																
i	PPO Works	**Ha**	**1321.000**	**2232.00**	**3.45**	140.00	237.00	225.00	380.00	105.00	178.00	70.00	118.00			**540.00**	**913.00**
ii	FYO Works	**Ha**	**820.000**	**572.00**	**0.88**			330.00	310.00							**330.00**	**310.00**
	Total of 5(2)(a)		**2141.000**	**2804.00**	**4.33**	**140.00**	**237.00**	**555.00**	**690.00**	**105.00**	**178.00**	**70.00**	**118.00**	**0.00**	**0.00**	**870.00**	**1223.00**
5(2)(b)	**Artificial Regeneration**																
i	Artificial Regeneration (PPO) (Mission Melghat)	**Ha.**	**75.000**	**82.50**	**0.13**												
ii	Artificial Regeneration 4th YO Works	**Ha**	**8531.930**	**1537.00**	**2.37**	235.00	42.00	170.00	31.00	178.45	32.00			150.00	27.00	**733.45**	**132.00**
iii	Plantation along river banks (as per ICFRE DPR) (National Authority Scheme)	**LS**	**0**	**300.00**	**0.46**											**0.00**	**0.00**
iv	Afforestation in scrub and barren land (National Authority Scheme) LIDAR	**Ha**	**350.000**	**663.00**	**1.02**											**0.00**	**0.00**
v	Gramvan Plantation (Maintenance)	**Ha**	**61.000**	**11.00**	**0.02**											**0.00**	**0.00**
	Total for Artificial Regeneration		**9017.930**	**2593.50**	**4.00**	**235.00**	**42.00**	**170.00**	**31.00**	**178.45**	**32.00**	**0.00**	**0.00**	**150.00**	**27.00**	**733.45**	**132.00**
5(2)(c)	**Silvicultural operations in forests**																
i	Fodder Development (PPO Works)	**Ha**	**1466.360**	**3343.00**	**5.16**					22.00	50.00					**22.00**	**50.00**
ii	Fodder Development (PPO Works) (Mission Melghat)	**Ha**	**200.000**	**200.00**	**0.31**											**0.00**	**0.00**
iii	Fodder Development (FYO Works)	**Ha**	**1874.000**	**2023.00**	**3.12**	40.00	43.00	25.00	27.00							**65.00**	**70.00**
iv	Fodder Development (SYO Works)	**Ha**	**2703.000**	**1975.00**	**3.05**					40.00	29.00			116.00	85.00	**156.00**	**114.00**
v	Cutback Operations	**Ha**	**90.000**	**8.00**	**0.01**											**0.00**	**0.00**
	Total for Silvicultural operations in forests		**6333.360**	**7549.00**	**11.65**	**40.00**	**43.00**	**25.00**	**27.00**	**62.00**	**79.00**	**0.00**	**0.00**	**116.00**	**85.00**	**243.00**	**234.00**

Rule No.	Particulars of work	Proposed for APO 2022-23			%	Territorial Circles											
						Gadchiroli											
						Gadchiroli		Wadsa		Allapalli		Bhamragarh		Sironcha		Total	
		Unit in	Phy	Fin		Phy	Fin	Phy	Fin	Phy	Fin	Phy	Fin	Phy	Fin	Phy	Fin
1	2	3	4	5	6	51	52	53	54	55	56	57	58	59	60	61	62
	Forest Protection																
5(2)(d)	**Protection of plantations and forests**																
i	Encroachment removal & Forest Protection	**Rmt**	**33054**	**1041.00**	**1.61**			30600	153.00					70.00	14.00	**30670.00**	**167.00**
ii	Survey, Demarcation & Fencing of Sensitive forest areas	**Rmt**	**70874**	**2834.00**	**4.38**	205.00	9.00	762.00	16.00							**967.00**	**25.00**
iii	Boundary Pillar Class I	**No.**	**18427**	**1475.00**	**2.28**			3797.00	304.00							**3797.00**	**304.00**
iv	Boundary Pillar Class I I	**No.**	**10304**	**413.00**	**0.64**											**0.00**	**0.00**
v	Construction, upgradation and maintenance of :																
(a)	Protection camps/Protection Huts	**No.**	**79**	**1580.00**	**2.44**			2.00	40.00							**2.00**	**40.00**
(b)	Forest Custody	**No.**	**6**	**138.00**	**0.21**											**0.00**	**0.00**
(c)	Labour Shed	**No.**	**48**	**316.00**	**0.49**			2.00	12.00							**2.00**	**12.00**
vi	Construction, upgradation and maintenance of Protection camps/Protection Huts/Forest Custody/Labour Shed (Mission Melghat)	**No.**		**340.00**	**0.52**												
vii	Establishment and maintenance of wireless networks	**No.**	**59**	**116.00**	**0.18**											**0.00**	**0.00**
viii	Establishment and maintenance of wireless networks (Mission Melghat)	**No.**	**24**	**60.00**	**0.09**											**0.00**	**0.00**
ix	Improving mobility of frontline staff for forest protection & patrolling.	**LS**	**0**	**148.00**	**0.23**		2.00		2.00		2.00		2.00		2.00	**0.00**	**10.00**
	Total for Protection of plantations and forests		**132875**	**8461.00**	**13.06**	**205.00**	**11.00**	**35163.00**	**527.00**	**0.00**	**2.00**	**0.00**	**2.00**	**70.00**	**16.00**	**35438.00**	**558.00**
5(2)(e)	**Pest and disease control in forest**	**Ha.**	**63**	**2.00**	**0.00**											**0.00**	**0.00**
5(2)(f)	**Forest fire prevention and control operations**																
i	Cutting and burning of fire lines	**Km**	**26362**	**766.00**	**1.18**			345.00	12.00					1211.26	24.00	**1556.26**	**36.00**
ii	Fire watchers	**No.**	**28431**	**750.00**	**1.16**							62.00	31.00	127.00	63.00	**189.00**	**94.00**
	Total for Forest fire prevention and control operations		**54793**	**1516.00**	**2.34**	**0.00**	**0.00**	**345.00**	**12.00**	**0.00**	**0.00**	**62.00**	**31.00**	**1338.26**	**87.00**	**1745.26**	**130.00**
	Total for Forest Protection		**187731**	**9979.00**	**15.41**	**205.00**	**11.00**	**35508.00**	**539.00**	**0.00**	**2.00**	**62.00**	**33.00**	**1408.26**	**103.00**	**37183.26**	**688.00**

Rule No.	Particulars of work	Proposed for APO 2022-23			%	Territorial Circles											
						Gadchiroli											
						Gadchiroli		Wadsa		Allapalli		Bhamragarh		Sironcha		Total	
		Unit in	Phy	Fin		Phy	Fin	Phy	Fin	Phy	Fin	Phy	Fin	Phy	Fin	Phy	Fin
1	2	3	4	5	6	51	52	53	54	55	56	57	58	59	60	61	62
5(2)(g)	**Soil and moisture conservation works in the forest**																
i	Construction of Gabiyan Bandhara	**No.**	**1141**	**588.00**	**0.91**									20.00	10.00	**20.00**	**10.00**
ii	Construction of Gabiyan Bandhara (Mission Melghat)	**No.**	**654**	**261.50**	**0.40**											**0.00**	**0.00**
iii	Construction of Cement Bandhare	**No.**	**158**	**2370.00**	**3.66**									1.00	15.00	**1.00**	**15.00**
iv	Construction of Cement Bandhare (Mission Melghat)	**No.**	**80**	**800.00**	**1.24**											**0.00**	**0.00**
v	Construction of check dams	**No.**	**81**	**52.00**	**0.08**											**0.00**	**0.00**
vi	Creation of Forest ponds/Vantale/Khodtadi	**No.**	**379**	**1137.00**	**1.76**			20.00	60.00			20.00	60.00			**40.00**	**120.00**
vii	Deep CCT	**Ha/Rmt**	**1253 / 3345**	**769.00**	**1.19**	35.00	27.00							7.00	7.00	**42.00**	**34.00**
viii	Earthen/Mati Nala Bunds	**No.**	**247**	**747.00**	**1.15**											**0.00**	**0.00**
ix	Construction of LBS Structure (Mission Melghat)	**No.**	**500**	**90.00**	**0.14**											**0.00**	**0.00**
x	**Soil and Water Conservation / Harvesting works (National Authority Scheme) LIDAR (As per santioned DPR)**	**LS**	**0**	**1000.00**	**1.54**											**0.00**	**0.00**
	Total for SMC works		**3240**	**7814.50**	**12.06**	**35.00**	**27.00**	**20.00**	**60.00**	**0.00**	**0.00**	**20.00**	**60.00**	**28.00**	**32.00**	**103.00**	**179.00**
	Wildlife Management & Man-animal conflict mitigation																
5(2)(h)	**Voluntary relocation of villages from Protected areas (including cost of land and other property of the field owners)**	**No.**	**48**	**10000.00**	**15.44**											**0.00**	**0.00**
5(2)(i)	**Improvement of wildlife habitat as provided in the approved wildlife management plan or working plan**																
i	All wildlife Management works will be carried out as per approved Management plan	**No.**	**15**	**4000.00**	**6.18**											**0.00**	**0.00**
ii	Medow development	**Ha.**	**2809.370**	**784.00**	**1.21**											**0.00**	**0.00**
iii	Creation & maintenance of water sources/water holes for wildlife	**No.**	**1142**	**764.00**	**1.18**											**0.00**	**0.00**
iv	Creation & maintenance of water sources/water holes for wildlife (Mission Melghat)	**No.**		**120.00**	**0.19**											**0.00**	**0.00**
v	Eradication of invasive species	**Ha.**	**8302.300**	**884.00**	**1.36**			9.00	18.00							**9.00**	**18.00**
vi	Eradication of invasive species (Mission Melghat)	**Ha.**	**1600.000**	**272.00**	**0.42**											**0.00**	**0.00**
	Total for Improvement of wildlife habitat		**13869**	**6824.00**	**10.53**	**0.00**	**0.00**	**9.00**	**18.00**	**0.00**	**0.00**	**0.00**	**0.00**	**0.00**	**0.00**	**9.00**	**18.00**

Rule No.	Particulars of work	Proposed for APO 2022-23			%	Territorial Circles											
						Gadchiroli											
						Gadchiroli		Wadsa		Allapalli		Bhamragarh		Sironcha		Total	
		Unit in	Phy	Fin		Phy	Fin	Phy	Fin	Phy	Fin	Phy	Fin	Phy	Fin	Phy	Fin
1	2	3	4	5	6	51	52	53	54	55	56	57	58	59	60	61	62
5(2)(j)	Planting and rejuvenation of forest cover on non-forest land falling in wildlife corridors	LS	0	3.00	0.00											0.00	0.00
5(2)(k)	**Establishment, operation and maintenance of animal rescue centre and veterinary treatment facilities for wild animals**																
i	Establishment, operation and maintenance of animal rescue centre/ Transit treatment Centre (Imcluding Provision for Gorewada)	No./LS	13	1377.00	2.13											0.00	0.00
ii	Veterinary treatment facilities for wild animals (Imcluding Provision for Gorewada)	No./LS	4	304.00	0.47											0.00	0.00
iii	Animal seizing & capturing devices	No./LS	189	406.00	0.63											0.00	0.00
iv	Rescue emergency operations	No./LS	6	426.00	0.66											0.00	0.00
v	Strengthening of Rapid rescue teams	No./LS	6	197.00	0.30											0.00	0.00
vi	Management of rewilding of tiger cubs	LS	0	40.00	0.06											0.00	0.00
	Total		218	2750.00	4.25	0.00	0.00	0.00	0.00	0.00	0.00	0.00	0.00	0.00	0.00	0.00	0.00
5(2)(l)	Supply of wood-saving cooking appliances and other forest produce saving devices in forest fringe villages as specified by the National Authority from time to time	No.	7250	135.00	0.21											0.00	0.00
	Total for Wildlife Management & Man-animal conflict mitigation		21385	19712.00	30.43	0.00	0.00	9.00	18.00	0.00	0.00	0.00	0.00	0.00	0.00	9.00	18.00
5(2)(m)	**Management of biological diversity and biological resource**																
i	New research projects and Maintenance of Ongoing Project by research wing of Maharashtra Forest Department	No.	11	357.00	0.55											0.00	0.00
ii	Base studies for forestry and wildlife related subjects	No.	4	158.00	0.24											0.00	0.00
iii	Conservation of Wildlife like GIB, Wild buffalo, Turtle, Vultures, Owl, Sparrow, etc.	No.	5	877.00	1.35											0.00	0.00
	Total		20	1392.00	2.15	0.00	0.00	0.00	0.00	0.00	0.00	0.00	0.00	0.00	0.00	0.00	0.00
	Grand Total for Activities under not less than 80% component		229868	51844.00	80.04	655.00	360.00	36287.00	1365.00	345.45	291.00	152.00	211.00	1702.26	247.00	39141.71	2474.00

Rule No.	Particulars of work	Proposed for APO 2022-23			%	Territorial Circles											
						Gadchiroli											
						Gadchiroli		Wadsa		Allapalli		Bhamragarh		Sironcha		Total	
		Unit in	Phy	Fin		Phy	Fin	Phy	Fin	Phy	Fin	Phy	Fin	Phy	Fin	Phy	Fin
1	2	3	4	5	6	51	52	53	54	55	56	57	58	59	60	61	62
5 (3)	**Works under not more than 20 % component (Rule 5 (3))**																
5(3)(a)(i)	**Establishment, up-gradation and maintenance of modern nurseries and other planting stock production facilities for production of quality planting materials**	**No.**	**10**	**150.00**	**0.23**			1.00	10.00							**1.00**	**10.00**
5(3)(a)(ii)	**Establishment, up-gradation and maintenance of modern nurseries and other planting stock production facilities for production of quality planting materials (Mission Melghat)**	**No.**		**90.00**	**0.14**											**0.00**	**0.00**
	Total of 5(3)(a)		**10**	**240.00**	**0.37**	**0.00**	**0.00**	**1.00**	**10.00**	**0.00**	**0.00**	**0.00**	**0.00**	**0.00**	**0.00**	**1.00**	**10.00**
5(3)(b)	**Promoting conservation, sustainable use and documentation of biological diversity including preservation of habitats, conservation of land and folk varieties and cultivars, domesticated stocks and breeds of animals and microorganisms and chronicling of knowledge relating to biological diversity**																
i	Documentation and Publications of study materials for FTIs	**LS**	**0**	**60.00**	**0.09**											**0.00**	**0.00**
ii	Conducting Workshops/Trainings/Seminars/ Conferences for promoting conservation & sustainable use of biological diversity and capacity building of the frontline staff & officers.	**No.**	**48**	**165.00**	**0.25**											**0.00**	**0.00**
iii	Capacity building and gender sensitization of Forest Staff's through FTI /TERI/Forest academies/other institutions/CFRMC/JFMC /PRI	**No.**	**476**	**2000.00**	**3.09**											**0.00**	**0.00**
iv	Improving training inputs through guest faculties in Forest Training Institutes / Forest Academies	**LS**	**0**	**20.00**	**0.03**											**0.00**	**0.00**
	Total		**524**	**2245.00**	**3.47**	**0.00**	**0.00**	**0.00**	**0.00**	**0.00**	**0.00**	**0.00**	**0.00**	**0.00**	**0.00**	**0.00**	**0.00**
5(3)(c)	Purchase and maintenance of equipment or devices used for communication and information technology for the purpose of protection of forest and wildlife/AMC		**0**	**950.00**	**1.47**											**0.00**	**0.00**
5(3)(d)	**Construction, up-gradation and maintenance of :**																
i	Inspection paths/Forest roads in forest area,	**Km/No**	**1121**	**296.00**	**0.46**											**0.00**	**0.00**
ii	flush causway	**No.**	**101**	**380.00**	**0.59**											**0.00**	**0.00**
iii	watch towers,	**No.**	**30**	**300.00**	**0.46**	1.00	10.00									**1.00**	**10.00**
iv	Check posts/Check Naka	**No.**	**11**	**99.00**	**0.15**	1.00	9.00									**1.00**	**9.00**
v	**Construction, up-gradation and maintenance of Inspection paths/Forest roads in forest area/flush causway/watch towers /Check posts/Check Naka (Mission Melghat)**	**No.**		**210.00**	**0.32**											**0.00**	**0.00**
	Total of 5(3)(d)		**1263**	**1285.00**	**1.98**	**2.00**	**19.00**	**0.00**	**0.00**	**0.00**	**0.00**	**0.00**	**0.00**	**0.00**	**0.00**	**2.00**	**19.00**

Rule No.	Particulars of work	Proposed for APO 2022-23			%	Territorial Circles											
						Gadchiroli											
						Gadchiroli		Wadsa		Allapalli		Bhamragarh		Sironcha		Total	
		Unit in	Phy	Fin		Phy	Fin	Phy	Fin	Phy	Fin	Phy	Fin	Phy	Fin	Phy	Fin
1	2	3	4	5	6	51	52	53	54	55	56	57	58	59	60	61	62
5(3)(e)	**Construction of residential and official buildings in forests for front line staffs deployed for protection of forest and wildlife**																
i	Construction of Type I Quarters	**No.**	**91**	**2002.00**	**3.09**	2.00	44.00	2.00	44.00	1.00	22.00	2.00	44.00	2.00	44.00	**9.00**	**198.00**
ii	Construction of Type-1 (G+2) 4 Units Residental Building for Special Tiger Protection Force (STPF)	**No.**	**3**	**541.00**	**0.84**											**0.00**	**0.00**
iii	Construction of Type II Quarters	**No.**	**48**	**1248.00**	**1.93**	1.00	26.00	1.00	26.00	1.00	26.00	1.00	26.00	1.00	26.00	**5.00**	**130.00**
iv	Construction of Type III Quarters	**No.**	**36**	**1296.00**	**2.00**	1.00	36.00	1.00	36.00	1.00	36.00	1.00	36.00	1.00	36.00	**5.00**	**180.00**
v	Construction of Range office	**No.**	**38**	**1709.00**	**2.64**	1.00	45.00	1.00	45.00	1.00	45.00	1.00	45.00	1.00	45.00	**5.00**	**225.00**
vi	Amenities for Woman Front line staff	**No.**	**19**	**266.00**	**0.41**	1.00	14.00					1.00	14.00	1.00	14.00	**3.00**	**42.00**
	Total New Constructions		**235**	**7062.00**	**10.90**	**6.00**	**165.00**	**5.00**	**151.00**	**4.00**	**129.00**	**6.00**	**165.00**	**6.00**	**165.00**	**27.00**	**775.00**
5(3)(f)(i)	Casual engagement of local people or labours to assist regular staff of State Forest Department for works for protection of forest and wildlife undertaken from State Fund	**No.**	**0**	**80.00**	**0.12**											**0.00**	**0.00**
5(3)(f)(ii)	Casual engagement of local people or labours to assist regular staff of State Forest Department for works for protection of forest and wildlife undertaken from State Fund (Mission Melghat)	**No.**	**0**	**225.00**	**0.35**											**0.00**	**0.00**
5(3)(g)	Survey and mapping of forest areas for forest fire control, compensatory afforestation works, soil and moisture conservation, catchment area treatment and wildlife management for preparing annual plans to be executed from the State Fund	**LS**	**0**	**100.00**	**0.15**											**0.00**	**0.00**
5(3)(h)	Independent concurrent monitoring and evaluation and third party monitoring of various works undertaken from State Fund	**LS**	**0**	**202.00**	**0.31**											**0.00**	**0.00**
5(3)(i)	Publicity-cum-awareness programme and exhibition on the various schemes being implemented by the State Authority from State Fund (including Nature Awareness Program conduct by METDB)	**LS**	**0**	**343.00**	**0.53**		2.00		2.00		2.00		2.00		2.00	**0.00**	**10.00**
5(3)(j)	Production and distribution of quality planting material through certified nurseries at subsidized price for promotion of trees outside forests on Government lands promoted by State Government {Saplings for planned afforestation activities in the area under control / management of the Central Armed Police Forces (CAPFs) (As per National Authority Instructions)}	**LS**	**0**	**200.00**	**0.31**											**0.00**	**0.00**
5(3)(k)	forest certification and development of certification standards	**LS**	**0**	**0.00**	**0.00**											**0.00**	**0.00**
	Total for works under not more than 20% component		**2032.33**	**12932.00**	**19.96**	**8.00**	**186.00**	**6.00**	**163.00**	**4.00**	**131.00**	**6.00**	**167.00**	**6.00**	**167.00**	**30.00**	**814.00**
	Grand Total for NPV			**64776.00**	**100.00**		**546.00**		**1528.00**		**422.00**		**378.00**		**414.00**		**3288.00**

ANNUAL PLAN OF OPERATIONS 2022-23						COMPONENT WISE ALLOTMENT FOR NPV WORKS											
Annexure-VII-A						(Amount in Rs. Lakhs)											
Rule No.	Particulars of work	Proposed for APO 2022-23			%	Territorial Circles											
						Kolhapur											
						Kolhapur		Satara		Sawantwadi		Sangli		Chiplun		Total	
		Unit in	Phy	Fin		Phy	Fin	Phy	Fin	Phy	Fin	Phy	Fin	Phy	Fin	Phy	Fin
1	2	3	4	5	6	63	64	65	66	67	68	69	70	71	72	73	74
5 (2)	**Works under Not less than 80 % component (Rule 5 (2))**																
5(2)(a)	**Assisted Natural Regeneration**																
i	PPO Works	**Ha**	**1321.000**	**2232.00**	**3.45**											**0.00**	**0.00**
ii	FYO Works	**Ha**	**820.000**	**572.00**	**0.88**											**0.00**	**0.00**
	Total of 5(2)(a)		**2141.000**	**2804.00**	**4.33**	**0.00**	**0.00**	**0.00**	**0.00**	**0.00**	**0.00**	**0.00**	**0.00**	**0.00**	**0.00**	**0.00**	**0.00**
5(2)(b)	**Artificial Regeneration**																
i	Artificial Regeneration (PPO) (Mission Melghat)	**Ha.**	**75.000**	**82.50**	**0.13**												
ii	Artificial Regeneration 4th YO Works	**Ha**	**8531.930**	**1537.00**	**2.37**	335.00	60.00	375.00	68.00			70.00	13.00			**780.00**	**141.00**
iii	Plantation along river banks (as per ICFRE DPR) (National Authority Scheme)	**LS**	**0**	**300.00**	**0.46**		30.00		30.00		30.00		30.00			**0.00**	**120.00**
iv	Afforestation in scrub and barren land (National Authority Scheme) LIDAR	**Ha**	**350.000**	**663.00**	**1.02**											**0.00**	**0.00**
v	Gramvan Plantation (Maintenance)	**Ha**	**61.000**	**11.00**	**0.02**											**0.00**	**0.00**
	Total for Artificial Regeneration		**9017.930**	**2593.50**	**4.00**	**335.00**	**90.00**	**375.00**	**98.00**	**0.00**	**30.00**	**70.00**	**43.00**	**0.00**	**0.00**	**780.00**	**261.00**
5(2)(c)	**Silvicultural operations in forests**																
i	Fodder Development (PPO Works)	**Ha**	**1466.360**	**3343.00**	**5.16**											**0.00**	**0.00**
ii	Fodder Development (PPO Works) (Mission Melghat)	**Ha**	**200.000**	**200.00**	**0.31**											**0.00**	**0.00**
iii	Fodder Development (FYO Works)	**Ha**	**1874.000**	**2023.00**	**3.12**											**0.00**	**0.00**
iv	Fodder Development (SYO Works)	**Ha**	**2703.000**	**1975.00**	**3.05**											**0.00**	**0.00**
v	Cutback Operations	**Ha**	**90.000**	**8.00**	**0.01**											**0.00**	**0.00**
	Total for Silvicultural operations in forests		**6333.360**	**7549.00**	**11.65**	**0.00**	**0.00**	**0.00**	**0.00**	**0.00**	**0.00**	**0.00**	**0.00**	**0.00**	**0.00**	**0.00**	**0.00**

Rule No.	Particulars of work	Proposed for APO 2022-23			%	Territorial Circles											
						Kolhapur											
						Kolhapur		Satara		Sawantwadi		Sangli		Chiplun		Total	
		Unit in	Phy	Fin		Phy	Fin	Phy	Fin	Phy	Fin	Phy	Fin	Phy	Fin	Phy	Fin
1	2	3	4	5	6	63	64	65	66	67	68	69	70	71	72	73	74
	Forest Protection																
5(2)(d)	**Protection of plantations and forests**																
i	Encroachment removal & Forest Protection	**Rmt**	**33054**	**1041.00**	**1.61**											**0.00**	**0.00**
ii	Survey, Demarcation & Fencing of Sensitive forest areas	**Rmt**	**70874**	**2834.00**	**4.38**	471.93	13.00					18284.50	33.00			**18756.43**	**46.00**
iii	Boundary Pillar Class I	**No.**	**18427**	**1475.00**	**2.28**							284.00	23.00			**284.00**	**23.00**
iv	Boundary Pillar Class I I	**No.**	**10304**	**413.00**	**0.64**							646.00	26.00			**646.00**	**26.00**
v	Construction, upgradation and maintenance of :																
(a)	Protection camps/Protection Huts	**No.**	**79**	**1580.00**	**2.44**	5.00	100.00	2.00	40.00			2.00	40.00			**9.00**	**180.00**
(b)	Forest Custody	**No.**	**6**	**138.00**	**0.21**							1.00	23.00			**1.00**	**23.00**
(c)	Labour Shed	**No.**	**48**	**316.00**	**0.49**							14.00	84.00			**14.00**	**84.00**
vi	Construction, upgradation and maintenance of Protection camps/Protection Huts/Forest Custody/Labour Shed (Mission Melghat)	**No.**		**340.00**	**0.52**												
vii	Establishment and maintenance of wireless networks	**No.**	**59**	**116.00**	**0.18**											**0.00**	**0.00**
viii	Establishment and maintenance of wireless networks (Mission Melghat)	**No.**	**24**	**60.00**	**0.09**											**0.00**	**0.00**
ix	Improving mobility of frontline staff for forest protection & patrolling.	**LS**	**0**	**148.00**	**0.23**		2.00		2.00		2.00		2.00		2.00	**0.00**	**10.00**
	Total for Protection of plantations and forests		**132875**	**8461.00**	**13.06**	**476.93**	**115.00**	**2.00**	**42.00**	**0.00**	**2.00**	**19231.50**	**231.00**	**0.00**	**2.00**	**19710.43**	**392.00**
5(2)(e)	**Pest and disease control in forest**	**Ha.**	**63**	**2.00**	**0.00**											**0.00**	**0.00**
5(2)(f)	**Forest fire prevention and control operations**																
i	Cutting and burning of fire lines	**Km**	**26362**	**766.00**	**1.18**	1400.00	20.00					401.50	12.00			**1801.50**	**32.00**
ii	Fire watchers	**No.**	**28431**	**750.00**	**1.16**	7500.00	30.00					56.00	22.00			**7556.00**	**52.00**
	Total for Forest fire prevention and control operations		**54793**	**1516.00**	**2.34**	**8900.00**	**50.00**	**0.00**	**0.00**	**0.00**	**0.00**	**457.50**	**34.00**	**0.00**	**0.00**	**9357.50**	**84.00**
	Total for Forest Protection		**187731**	**9979.00**	**15.41**	**9376.93**	**165.00**	**2.00**	**42.00**	**0.00**	**2.00**	**19689.00**	**265.00**	**0.00**	**2.00**	**29067.93**	**476.00**

Rule No.	Particulars of work	Proposed for APO 2022-23			%	Territorial Circles											
						Kolhapur											
						Kolhapur		Satara		Sawantwadi		Sangli		Chiplun		Total	
		Unit in	Phy	Fin		Phy	Fin	Phy	Fin	Phy	Fin	Phy	Fin	Phy	Fin	Phy	Fin
1	2	3	4	5	6	63	64	65	66	67	68	69	70	71	72	73	74
5(2)(g)	**Soil and moisture conservation works in the forest**																
i	Construction of Gabiyan Bandhara	**No.**	**1141**	**588.00**	**0.91**	20.00	10.00	50.00	25.00			26.00	13.00			**96.00**	**48.00**
ii	Construction of Gabiyan Bandhara (Mission Melghat)	**No.**	**654**	**261.50**	**0.40**											**0.00**	**0.00**
iii	Construction of Cement Bandhare	**No.**	**158**	**2370.00**	**3.66**			10.00	150.00			10.00	150.00			**20.00**	**300.00**
iv	Construction of Cement Bandhare (Mission Melghat)	**No.**	**80**	**800.00**	**1.24**											**0.00**	**0.00**
v	Construction of check dams	**No.**	**81**	**52.00**	**0.08**			10.00	4.50							**10.00**	**4.50**
vi	Creation of Forest ponds/Vantale/Khodtadi	**No.**	**379**	**1137.00**	**1.76**	20.00	60.00	20.00	60.00			7.00	21.00			**47.00**	**141.00**
vii	Deep CCT	**Ha/Rmt**	**1253 / 3345**	**769.00**	**1.19**							10.00	20.00			**10.00**	**20.00**
viii	Earthen/Mati Nala Bunds	**No.**	**247**	**747.00**	**1.15**			15.00	45.00			15.00	45.00			**30.00**	**90.00**
ix	Construction of LBS Structure (Mission Melghat)	**No.**	**500**	**90.00**	**0.14**											**0.00**	**0.00**
x	**Soil and Water Conservation / Harvesting works (National Authority Scheme) LIDAR (As per santioned DPR)**	**LS**	**0**	**1000.00**	**1.54**											**0.00**	**0.00**
	Total for SMC works		**3240**	**7814.50**	**12.06**	**40.00**	**70.00**	**105.00**	**284.50**	**0.00**	**0.00**	**68.00**	**249.00**	**0.00**	**0.00**	**213.00**	**603.50**
	Wildlife Management & Man-animal conflict mitigation																
5(2)(h)	**Voluntary relocation of villages from Protected areas (including cost of land and other property of the field owners)**	**No.**	**48**	**10000.00**	**15.44**											**0.00**	**0.00**
5(2)(i)	**Improvement of wildlife habitat as provided in the approved wildlife management plan or working plan**																
i	All wildlife Management works will be carried out as per approved Management plan	**No.**	**15**	**4000.00**	**6.18**											**0.00**	**0.00**
ii	Medow development	**Ha.**	**2809.370**	**784.00**	**1.21**											**0.00**	**0.00**
iii	Creation & maintenance of water sources/water holes for wildlife	**No.**	**1142**	**764.00**	**1.18**											**0.00**	**0.00**
iv	Creation & maintenance of water sources/water holes for wildlife (Mission Melghat)	**No.**		**120.00**	**0.19**											**0.00**	**0.00**
v	Eradication of invasive species	**Ha.**	**8302.300**	**884.00**	**1.36**											**0.00**	**0.00**
vi	Eradication of invasive species (Mission Melghat)	**Ha.**	**1600.000**	**272.00**	**0.42**											**0.00**	**0.00**
	Total for Improvement of wildlife habitat		**13869**	**6824.00**	**10.53**	**0.00**	**0.00**	**0.00**	**0.00**	**0.00**	**0.00**	**0.00**	**0.00**	**0.00**	**0.00**	**0.00**	**0.00**

Rule No.	Particulars of work	Proposed for APO 2022-23			%	Territorial Circles											
						Kolhapur											
						Kolhapur		Satara		Sawantwadi		Sangli		Chiplun		Total	
		Unit in	Phy	Fin		Phy	Fin	Phy	Fin	Phy	Fin	Phy	Fin	Phy	Fin	Phy	Fin
1	2	3	4	5	6	63	64	65	66	67	68	69	70	71	72	73	74
5(2)(j)	Planting and rejuvenation of forest cover on non-forest land falling in wildlife corridors	LS	0	3.00	0.00											0.00	0.00
5(2)(k)	**Establishment, operation and maintenance of animal rescue centre and veterinary treatment facilities for wild animals**																
i	Establishment, operation and maintenance of animal rescue centre/ Transit treatment Centre (Imcluding Provision for Gorewada)	No./LS	13	1377.00	2.13							1.00	2.00			1.00	2.00
ii	Veterinary treatment facilities for wild animals (Imcluding Provision for Gorewada)	No./LS	4	304.00	0.47							1.00	2.00			1.00	2.00
iii	Animal seizing & capturing devices	No./LS	189	406.00	0.63							2.00	8.00			2.00	8.00
iv	Rescue emergency operations	No./LS	6	426.00	0.66							1.00	2.00			1.00	2.00
v	Strengthening of Rapid rescue teams	No./LS	6	197.00	0.30							1.00	5.00			1.00	5.00
vi	Management of rewilding of tiger cubs	LS	0	40.00	0.06											0.00	0.00
	Total		218	2750.00	4.25	0.00	0.00	0.00	0.00	0.00	0.00	6.00	19.00	0.00	0.00	6.00	19.00
5(2)(l)	Supply of wood-saving cooking appliances and other forest produce saving devices in forest fringe villages as specified by the National Authority from time to time	No.	7250	135.00	0.21	1000.00	75.00									1000.00	75.00
	Total for Wildlife Management & Man-animal conflict mitigation		21385	19712.00	30.43	1000.00	75.00	0.00	0.00	0.00	0.00	6.00	19.00	0.00	0.00	1006.00	94.00
5(2)(m)	**Management of biological diversity and biological resource**																
i	New research projects and Maintenance of Ongoing Project by research wing of Maharashtra Forest Department	No.	11	357.00	0.55											0.00	0.00
ii	Base studies for forestry and wildlife related subjects	No.	4	158.00	0.24											0.00	0.00
iii	Conservation of Wildlife like GIB, Wild buffalo, Turtle, Vultures, Owl, Sparrow, etc.	No.	5	877.00	1.35											0.00	0.00
	Total		20	1392.00	2.15	0.00	0.00	0.00	0.00	0.00	0.00	0.00	0.00	0.00	0.00	0.00	0.00
	Grand Total for Activities under not less than 80% component		229868	51844.00	80.04	10751.93	400.00	482.00	424.50	0.00	32.00	19833.00	576.00	0.00	2.00	31066.93	1434.50

Rule No.	Particulars of work	Proposed for APO 2022-23			%	Territorial Circles											
						Kolhapur											
						Kolhapur		Satara		Sawantwadi		Sangli		Chiplun		Total	
		Unit in	Phy	Fin		Phy	Fin	Phy	Fin	Phy	Fin	Phy	Fin	Phy	Fin	Phy	Fin
1	2	3	4	5	6	63	64	65	66	67	68	69	70	71	72	73	74
5 (3)	**Works under not more than 20 % component (Rule 5 (3))**																
5(3)(a)(i)	**Establishment, up-gradation and maintenance of modern nurseries and other planting stock production facilities for production of quality planting materials**	**No.**	**10**	**150.00**	**0.23**											**0.00**	**0.00**
5(3)(a)(ii)	**Establishment, up-gradation and maintenance of modern nurseries and other planting stock production facilities for production of quality planting materials (Mission Melghat)**	**No.**		**90.00**	**0.14**											**0.00**	**0.00**
	Total of 5(3)(a)		**10**	**240.00**	**0.37**	**0.00**	**0.00**	**0.00**	**0.00**	**0.00**	**0.00**	**0.00**	**0.00**	**0.00**	**0.00**	**0.00**	**0.00**
5(3)(b)	**Promoting conservation, sustainable use and documentation of biological diversity including preservation of habitats, conservation of land and folk varieties and cultivars, domesticated stocks and breeds of animals and microorganisms and chronicling of knowledge relating to biological diversity**																
i	Documentation and Publications of study materials for FTIs	**LS**	**0**	**60.00**	**0.09**											**0.00**	**0.00**
ii	Conducting Workshops/Trainings/Seminars/ Conferences for promoting conservation & sustainable use of biological diversity and capacity building of the frontline staff & officers.	**No.**	**48**	**165.00**	**0.25**											**0.00**	**0.00**
iii	Capacity building and gender sensitization of Forest Staff's through FTI /TERI/Forest academies/other institutions/CFRMC/JFMC /PRI	**No.**	**476**	**2000.00**	**3.09**											**0.00**	**0.00**
iv	Improving training inputs through guest faculties in Forest Training Institutes / Forest Academies	**LS**	**0**	**20.00**	**0.03**											**0.00**	**0.00**
	Total		**524**	**2245.00**	**3.47**	**0.00**	**0.00**	**0.00**	**0.00**	**0.00**	**0.00**	**0.00**	**0.00**	**0.00**	**0.00**	**0.00**	**0.00**
5(3)(c)	Purchase and maintenance of equipment or devices used for communication and information technology for the purpose of protection of forest and wildlife/AMC		**0**	**950.00**	**1.47**											**0.00**	**0.00**
5(3)(d)	**Construction, up-gradation and maintenance of :**																
i	Inspection paths/Forest roads in forest area,	**Km/No**	**1121**	**296.00**	**0.46**											**0.00**	**0.00**
ii	flush causway	**No.**	**101**	**380.00**	**0.59**											**0.00**	**0.00**
iii	watch towers,	**No.**	**30**	**300.00**	**0.46**											**0.00**	**0.00**
iv	Check posts/Check Naka	**No.**	**11**	**99.00**	**0.15**											**0.00**	**0.00**
v	**Construction, up-gradation and maintenance of Inspection paths/Forest roads in forest area/flush causway/watch towers /Check posts/Check Naka (Mission Melghat)**	**No.**		**210.00**	**0.32**											**0.00**	**0.00**
	Total of 5(3)(d)		**1263**	**1285.00**	**1.98**	**0.00**	**0.00**	**0.00**	**0.00**	**0.00**	**0.00**	**0.00**	**0.00**	**0.00**	**0.00**	**0.00**	**0.00**

Rule No.	Particulars of work	Proposed for APO 2022-23			%	Territorial Circles											
						Kolhapur											
						Kolhapur		Satara		Sawantwadi		Sangli		Chiplun		Total	
		Unit in	Phy	Fin		Phy	Fin	Phy	Fin	Phy	Fin	Phy	Fin	Phy	Fin	Phy	Fin
1	2	3	4	5	6	63	64	65	66	67	68	69	70	71	72	73	74
5(3)(e)	**Construction of residential and official buildings in forests for front line staffs deployed for protection of forest and wildlife**																
i	Construction of Type I Quarters	**No.**	**91**	**2002.00**	**3.09**	2.00	44.00									**2.00**	**44.00**
ii	Construction of Type-1 (G+2) 4 Units Residental Building for Special Tiger Protection Force (STPF)	**No.**	**3**	**541.00**	**0.84**											**0.00**	**0.00**
iii	Construction of Type II Quarters	**No.**	**48**	**1248.00**	**1.93**	1.00	26.00					1.00	26.00			**2.00**	**52.00**
iv	Construction of Type III Quarters	**No.**	**36**	**1296.00**	**2.00**	1.00	36.00	1.00	36.00			1.00	36.00			**3.00**	**108.00**
v	Construction of Range office	**No.**	**38**	**1709.00**	**2.64**	1.00	45.00					1.00	45.00			**2.00**	**90.00**
vi	Amenities for Woman Front line staff	**No.**	**19**	**266.00**	**0.41**											**0.00**	**0.00**
	Total New Constructions		**235**	**7062.00**	**10.90**	**5.00**	**151.00**	**1.00**	**36.00**	**0.00**	**0.00**	**3.00**	**107.00**	**0.00**	**0.00**	**9.00**	**294.00**
5(3)(f)(i)	Casual engagement of local people or labours to assist regular staff of State Forest Department for works for protection of forest and wildlife undertaken from State Fund	**No.**	**0**	**80.00**	**0.12**											**0.00**	**0.00**
5(3)(f)(ii)	Casual engagement of local people or labours to assist regular staff of State Forest Department for works for protection of forest and wildlife undertaken from State Fund (Mission Melghat)	**No.**	**0**	**225.00**	**0.35**											**0.00**	**0.00**
5(3)(g)	Survey and mapping of forest areas for forest fire control, compensatory afforestation works, soil and moisture conservation, catchment area treatment and wildlife management for preparing annual plans to be executed from the State Fund	**LS**	**0**	**100.00**	**0.15**											**0.00**	**0.00**
5(3)(h)	Independent concurrent monitoring and evaluation and third party monitoring of various works undertaken from State Fund	**LS**	**0**	**202.00**	**0.31**											**0.00**	**0.00**
5(3)(i)	Publicity-cum-awareness programme and exhibition on the various schemes being implemented by the State Authority from State Fund (including Nature Awareness Program conduct by METDB)	**LS**	**0**	**343.00**	**0.53**		2.00		2.00		2.00		2.00		2.00	**0.00**	**10.00**
5(3)(j)	Production and distribution of quality planting material through certified nurseries at subsidized price for promotion of trees outside forests on Government lands promoted by State Government {Saplings for planned afforestation activities in the area under control / management of the Central Armed Police Forces (CAPFs) (As per National Authority Instructions)}	**LS**	**0**	**200.00**	**0.31**											**0.00**	**0.00**
5(3)(k)	forest certification and development of certification standards	**LS**	**0**	**0.00**	**0.00**											**0.00**	**0.00**
	Total for works under not more than 20% component		**2032.33**	**12932.00**	**19.96**	**5.00**	**153.00**	**1.00**	**38.00**	**0.00**	**2.00**	**3.00**	**109.00**	**0.00**	**2.00**	**9.00**	**304.00**
	Grand Total for NPV			**64776.00**	**100.00**		**553.00**		**462.50**		**34.00**		**685.00**		**4.00**		**1738.50**

ANNUAL PLAN OF OPERATIONS 2022-23						COMPONENT WISE ALLOTMENT FOR NPV WORKS									
Annexure-VII-A						(Amount in Rs. Lakhs)									
Rule No.	Particulars of work	Proposed for APO 2022-23			%	Territorial Circles									
						Nagpur									
						Nagpur		Wardha		Gondia		Bhandara		Total	
		Unit in	Phy	Fin		Phy	Fin	Phy	Fin	Phy	Fin	Phy	Fin	Phy	Fin
1	2	3	4	5	6	75	76	77	78	79	80	81	82	83	84
5 (2)	**Works under Not less than 80 % component (Rule 5 (2))**														
5(2)(a)	**Assisted Natural Regeneration**														
i	PPO Works	**Ha**	**1321.000**	**2232.00**	**3.45**			50.00	84.00			265.00	448.00	**315.00**	**532.00**
ii	FYO Works	**Ha**	**820.000**	**572.00**	**0.88**							110.00	99.00	**110.00**	**99.00**
	Total of 5(2)(a)		**2141.000**	**2804.00**	**4.33**	**0.00**	**0.00**	**50.00**	**84.00**	**0.00**	**0.00**	**375.00**	**547.00**	**425.00**	**631.00**
5(2)(b)	**Artificial Regeneration**														
i	Artificial Regeneration (PPO) (Mission Melghat)	**Ha.**	**75.000**	**82.50**	**0.13**										
ii	Artificial Regeneration 4th YO Works	**Ha**	**8531.930**	**1537.00**	**2.37**	179.00	32.00	200.00	36.00	204.00	37.00	200.00	36.00	**783.00**	**141.00**
iii	Plantation along river banks (as per ICFRE DPR) (National Authority Scheme)	**LS**	**0**	**300.00**	**0.46**									**0.00**	**0.00**
iv	Afforestation in scrub and barren land (National Authority Scheme) LIDAR	**Ha**	**350.000**	**663.00**	**1.02**									**0.00**	**0.00**
v	Gramvan Plantation (Maintenance)	**Ha**	**61.000**	**11.00**	**0.02**									**0.00**	**0.00**
	Total for Artificial Regeneration		**9017.930**	**2593.50**	**4.00**	**179.00**	**32.00**	**200.00**	**36.00**	**204.00**	**37.00**	**200.00**	**36.00**	**783.00**	**141.00**
5(2)(c)	**Silvicultural operations in forests**														
i	Fodder Development (PPO Works)	**Ha**	**1466.360**	**3343.00**	**5.16**	37.00	84.00	327.00	745.00	39.00	89.00	81.36	186.00	**484.36**	**1104.00**
ii	Fodder Development (PPO Works) (Mission Melghat)	**Ha**	**200.000**	**200.00**	**0.31**									**0.00**	**0.00**
iii	Fodder Development (FYO Works)	**Ha**	**1874.000**	**2023.00**	**3.12**			55.00	59.00					**55.00**	**59.00**
iv	Fodder Development (SYO Works)	**Ha**	**2703.000**	**1975.00**	**3.05**	12.00	9.00	35.00	26.00					**47.00**	**35.00**
v	Cutback Operations	**Ha**	**90.000**	**8.00**	**0.01**									**0.00**	**0.00**
	Total for Silvicultural operations in forests		**6333.360**	**7549.00**	**11.65**	**49.00**	**93.00**	**417.00**	**830.00**	**39.00**	**89.00**	**81.36**	**186.00**	**586.36**	**1198.00**

Rule No.	Particulars of work	Proposed for APO 2022-23			%	Territorial Circles									
						Nagpur									
						Nagpur		Wardha		Gondia		Bhandara		Total	
		Unit in	Phy	Fin		Phy	Fin	Phy	Fin	Phy	Fin	Phy	Fin	Phy	Fin
1	2	3	4	5	6	75	76	77	78	79	80	81	82	83	84
	Forest Protection														
5(2)(d)	**Protection of plantations and forests**														
i	Encroachment removal & Forest Protection	**Rmt**	**33054**	**1041.00**	**1.61**	162.00	118.00	25.00	30.00					**187.00**	**148.00**
ii	Survey, Demarcation & Fencing of Sensitive forest areas	**Rmt**	**70874**	**2834.00**	**4.38**			66.03	109.00					**66.03**	**109.00**
iii	Boundary Pillar Class I	**No.**	**18427**	**1475.00**	**2.28**	3080.00	246.00	1250.00	100.00	936.00	75.00	1024.00	82.00	**6290.00**	**503.00**
iv	Boundary Pillar Class I I	**No.**	**10304**	**413.00**	**0.64**	28.00	2.00	100.00	4.00	983.00	39.00	97.00	4.00	**1208.00**	**49.00**
v	Construction, upgradation and maintenance of :														
(a)	Protection camps/Protection Huts	**No.**	**79**	**1580.00**	**2.44**			3.00	60.00	4.00	80.00			**7.00**	**140.00**
(b)	Forest Custody	**No.**	**6**	**138.00**	**0.21**			1.00	23.00					**1.00**	**23.00**
(c)	Labour Shed	**No.**	**48**	**316.00**	**0.49**									**0.00**	**0.00**
vi	Construction, upgradation and maintenance of Protection camps/Protection Huts/Forest Custody/Labour Shed (Mission Melghat)	**No.**		**340.00**	**0.52**										
vii	Establishment and maintenance of wireless networks	**No.**	**59**	**116.00**	**0.18**			4.00	6.00					**4.00**	**6.00**
viii	Establishment and maintenance of wireless networks (Mission Melghat)	**No.**	**24**	**60.00**	**0.09**									**0.00**	**0.00**
ix	Improving mobility of frontline staff for forest protection & patrolling.	**LS**	**0**	**148.00**	**0.23**		2.00		2.00		2.00		2.00	**0.00**	**8.00**
	Total for Protection of plantations and forests		**132875**	**8461.00**	**13.06**	**3270.00**	**368.00**	**1449.03**	**334.00**	**1923.00**	**196.00**	**1121.00**	**88.00**	**7763.03**	**986.00**
5(2)(e)	**Pest and disease control in forest**	**Ha.**	**63**	**2.00**	**0.00**									**0.00**	**0.00**
5(2)(f)	**Forest fire prevention and control operations**														
i	Cutting and burning of fire lines	**Km**	**26362**	**766.00**	**1.18**	200.00	10.00	423.38	23.00	220.10	10.00		10.00	**843.48**	**53.00**
ii	Fire watchers	**No.**	**28431**	**750.00**	**1.16**	55.00	15.00	39.00	38.00	36.00	16.00			**130.00**	**69.00**
	Total for Forest fire prevention and control operations		**54793**	**1516.00**	**2.34**	**255.00**	**25.00**	**462.38**	**61.00**	**256.10**	**26.00**	**0.00**	**10.00**	**973.48**	**122.00**
	Total for Forest Protection		**187731**	**9979.00**	**15.41**	**3525.00**	**393.00**	**1911.41**	**395.00**	**2179.10**	**222.00**	**1121.00**	**98.00**	**8736.51**	**1108.00**

Rule No.	Particulars of work	Proposed for APO 2022-23			%	Territorial Circles									
						Nagpur									
						Nagpur		Wardha		Gondia		Bhandara		Total	
		Unit in	Phy	Fin		Phy	Fin	Phy	Fin	Phy	Fin	Phy	Fin	Phy	Fin
1	2	3	4	5	6	75	76	77	78	79	80	81	82	83	84
5(2)(g)	**Soil and moisture conservation works in the forest**														
i	Construction of Gabiyan Bandhara	**No.**	**1141**	**588.00**	**0.91**			50.00	25.00	50.00	25.00			**100.00**	**50.00**
ii	Construction of Gabiyan Bandhara (Mission Melghat)	**No.**	**654**	**261.50**	**0.40**									**0.00**	**0.00**
iii	Construction of Cement Bandhare	**No.**	**158**	**2370.00**	**3.66**			2.00	30.00	7.00	105.00			**9.00**	**135.00**
iv	Construction of Cement Bandhare (Mission Melghat)	**No.**	**80**	**800.00**	**1.24**									**0.00**	**0.00**
v	Construction of check dams	**No.**	**81**	**52.00**	**0.08**									**0.00**	**0.00**
vi	Creation of Forest ponds/Vantale/Khodtadi	**No.**	**379**	**1137.00**	**1.76**			20.00	60.00	7.00	21.00			**27.00**	**81.00**
vii	Deep CCT	**Ha/Rmt**	**1253 / 3345**	**769.00**	**1.19**			81.00	30.00					**81.00**	**30.00**
viii	Earthen/Mati Nala Bunds	**No.**	**247**	**747.00**	**1.15**					7.00	21.00			**7.00**	**21.00**
ix	Construction of LBS Structure (Mission Melghat)	**No.**	**500**	**90.00**	**0.14**									**0.00**	**0.00**
x	**Soil and Water Conservation / Harvesting works (National Authority Scheme) LIDAR (As per santioned DPR)**	**LS**	**0**	**1000.00**	**1.54**									**0.00**	**0.00**
	Total for SMC works		**3240**	**7814.50**	**12.06**	**0.00**	**0.00**	**153.00**	**145.00**	**71.00**	**172.00**	**0.00**	**0.00**	**224.00**	**317.00**
	Wildlife Management & Man-animal conflict mitigation														
5(2)(h)	**Voluntary relocation of villages from Protected areas (including cost of land and other property of the field owners)**	**No.**	**48**	**10000.00**	**15.44**									**0.00**	**0.00**
5(2)(i)	**Improvement of wildlife habitat as provided in the approved wildlife management plan or working plan**														
i	All wildlife Management works will be carried out as per approved Management plan	**No.**	**15**	**4000.00**	**6.18**									**0.00**	**0.00**
ii	Medow development	**Ha.**	**2809.370**	**784.00**	**1.21**									**0.00**	**0.00**
iii	Creation & maintenance of water sources/water holes for wildlife	**No.**	**1142**	**764.00**	**1.18**									**0.00**	**0.00**
iv	Creation & maintenance of water sources/water holes for wildlife (Mission Melghat)	**No.**		**120.00**	**0.19**									**0.00**	**0.00**
v	Eradication of invasive species	**Ha.**	**8302.300**	**884.00**	**1.36**	1990.00	179.00							**1990.00**	**179.00**
vi	Eradication of invasive species (Mission Melghat)	**Ha.**	**1600.000**	**272.00**	**0.42**									**0.00**	**0.00**
	Total for Improvement of wildlife habitat		**13869**	**6824.00**	**10.53**	**1990.00**	**179.00**	**0.00**	**0.00**	**0.00**	**0.00**	**0.00**	**0.00**	**1990.00**	**179.00**

Rule No.	Particulars of work	Proposed for APO 2022-23			%	Territorial Circles									
						Nagpur									
						Nagpur		Wardha		Gondia		Bhandara		Total	
		Unit in	Phy	Fin		Phy	Fin	Phy	Fin	Phy	Fin	Phy	Fin	Phy	Fin
1	2	3	4	5	6	75	76	77	78	79	80	81	82	83	84
5(2)(j)	Planting and rejuvenation of forest cover on non-forest land falling in wildlife corridors	**LS**	**0**	**3.00**	**0.00**									**0.00**	**0.00**
5(2)(k)	**Establishment, operation and maintenance of animal rescue centre and veterinary treatment facilities for wild animals**														
i	Establishment, operation and maintenance of animal rescue centre/ Transit treatment Centre (Imcluding Provision for Gorewada)	**No./LS**	**13**	**1377.00**	**2.13**		35.00							**0.00**	**35.00**
ii	Veterinary treatment facilities for wild animals (Imcluding Provision for Gorewada)	**No./LS**	**4**	**304.00**	**0.47**		45.00		3.00					**0.00**	**48.00**
iii	Animal seizing & capturing devices	**No./LS**	**189**	**406.00**	**0.63**		34.00				10.00			**0.00**	**44.00**
iv	Rescue emergency operations	**No./LS**	**6**	**426.00**	**0.66**		26.00				2.00			**0.00**	**28.00**
v	Strengthening of Rapid rescue teams	**No./LS**	**6**	**197.00**	**0.30**		40.00				10.00			**0.00**	**50.00**
vi	Management of rewilding of tiger cubs	**LS**	**0**	**40.00**	**0.06**		20.00							**0.00**	**20.00**
	Total		**218**	**2750.00**	**4.25**	**0.00**	**200.00**	**0.00**	**3.00**	**0.00**	**22.00**	**0.00**	**0.00**	**0.00**	**225.00**
5(2)(l)	Supply of wood-saving cooking appliances and other forest produce saving devices in forest fringe villages as specified by the National Authority from time to time	**No.**	**7250**	**135.00**	**0.21**									**0.00**	**0.00**
	Total for Wildlife Management & Man-animal conflict mitigation		**21385**	**19712.00**	**30.43**	**1990.00**	**379.00**	**0.00**	**3.00**	**0.00**	**22.00**	**0.00**	**0.00**	**1990.00**	**404.00**
5(2)(m)	**Management of biological diversity and biological resource**														
i	New research projects and Maintenance of Ongoing Project by research wing of Maharashtra Forest Department	**No.**	**11**	**357.00**	**0.55**									**0.00**	**0.00**
ii	Base studies for forestry and wildlife related subjects	**No.**	**4**	**158.00**	**0.24**									**0.00**	**0.00**
iii	Conservation of Wildlife like GIB, Wild buffalo, Turtle, Vultures, Owl, Sparrow, etc.	**No.**	**5**	**877.00**	**1.35**									**0.00**	**0.00**
	Total		**20**	**1392.00**	**2.15**	**0.00**	**0.00**	**0.00**	**0.00**	**0.00**	**0.00**	**0.00**	**0.00**	**0.00**	**0.00**
	Grand Total for Activities under not less than 80% component		**229868**	**51844.00**	**80.04**	**5743.00**	**897.00**	**2731.41**	**1493.00**	**2493.10**	**542.00**	**1777.36**	**867.00**	**12744.87**	**3799.00**

Rule No.	Particulars of work	Proposed for APO 2022-23			%	Territorial Circles									
						Nagpur									
						Nagpur		Wardha		Gondia		Bhandara		Total	
		Unit in	Phy	Fin		Phy	Fin	Phy	Fin	Phy	Fin	Phy	Fin	Phy	Fin
1	2	3	4	5	6	75	76	77	78	79	80	81	82	83	84
5 (3)	**Works under not more than 20 % component (Rule 5 (3))**														
5(3)(a)(i)	**Establishment, up-gradation and maintenance of modern nurseries and other planting stock production facilities for production of quality planting materials**	**No.**	**10**	**150.00**	**0.23**									**0.00**	**0.00**
5(3)(a)(ii)	**Establishment, up-gradation and maintenance of modern nurseries and other planting stock production facilities for production of quality planting materials (Mission Melghat)**	**No.**		**90.00**	**0.14**									**0.00**	**0.00**
	Total of 5(3)(a)		**10**	**240.00**	**0.37**	**0.00**	**0.00**	**0.00**	**0.00**	**0.00**	**0.00**	**0.00**	**0.00**	**0.00**	**0.00**
5(3)(b)	**Promoting conservation, sustainable use and documentation of biological diversity including preservation of habitats, conservation of land and folk varieties and cultivars, domesticated stocks and breeds of animals and microorganisms and chronicling of knowledge relating to biological diversity**														
i	Documentation and Publications of study materials for FTIs	**LS**	**0**	**60.00**	**0.09**									**0.00**	**0.00**
ii	Conducting Workshops/Trainings/Seminars/ Conferences for promoting conservation & sustainable use of biological diversity and capacity building of the frontline staff & officers.	**No.**	**48**	**165.00**	**0.25**									**0.00**	**0.00**
iii	Capacity building and gender sensitization of Forest Staff's through FTI /TERI/Forest academies/other institutions/CFRMC/JFMC /PRI	**No.**	**476**	**2000.00**	**3.09**									**0.00**	**0.00**
iv	Improving training inputs through guest faculties in Forest Training Institutes / Forest Academies	**LS**	**0**	**20.00**	**0.03**									**0.00**	**0.00**
	Total		**524**	**2245.00**	**3.47**	**0.00**	**0.00**	**0.00**	**0.00**	**0.00**	**0.00**	**0.00**	**0.00**	**0.00**	**0.00**
5(3)(c)	Purchase and maintenance of equipment or devices used for communication and information technology for the purpose of protection of forest and wildlife/AMC		**0**	**950.00**	**1.47**									**0.00**	**0.00**
5(3)(d)	**Construction, up-gradation and maintenance of :**														
i	Inspection paths/Forest roads in forest area,	**Km/No**	**1121**	**296.00**	**0.46**					12.00	8.00			**12.00**	**8.00**
ii	flush causway	**No.**	**101**	**380.00**	**0.59**			16.00	180.00					**16.00**	**180.00**
iii	watch towers,	**No.**	**30**	**300.00**	**0.46**			2.00	20.00	2.00	20.00			**4.00**	**40.00**
iv	Check posts/Check Naka	**No.**	**11**	**99.00**	**0.15**			1.00	9.00					**1.00**	**9.00**
v	**Construction, up-gradation and maintenance of Inspection paths/Forest roads in forest area/flush causway/watch towers /Check posts/Check Naka (Mission Melghat)**	**No.**		**210.00**	**0.32**									**0.00**	**0.00**
	Total of 5(3)(d)		**1263**	**1285.00**	**1.98**	**0.00**	**0.00**	**19.00**	**209.00**	**14.00**	**28.00**	**0.00**	**0.00**	**33.00**	**237.00**

Rule No.	Particulars of work	Proposed for APO 2022-23			%	Territorial Circles									
						Nagpur									
						Nagpur		Wardha		Gondia		Bhandara		Total	
		Unit in	Phy	Fin		Phy	Fin	Phy	Fin	Phy	Fin	Phy	Fin	Phy	Fin
1	2	3	4	5	6	75	76	77	78	79	80	81	82	83	84
5(3)(e)	**Construction of residential and official buildings in forests for front line staffs deployed for protection of forest and wildlife**														
i	Construction of Type I Quarters	**No.**	**91**	**2002.00**	**3.09**	2.00	44.00	2.00	44.00	2.00	44.00	2.00	44.00	**8.00**	**176.00**
ii	Construction of Type-1 (G+2) 4 Units Residental Building for Special Tiger Protection Force (STPF)	**No.**	**3**	**541.00**	**0.84**									**0.00**	**0.00**
iii	Construction of Type II Quarters	**No.**	**48**	**1248.00**	**1.93**	1.00	26.00	1.00	26.00	1.00	26.00	1.00	26.00	**4.00**	**104.00**
iv	Construction of Type III Quarters	**No.**	**36**	**1296.00**	**2.00**	1.00	36.00			1.00	36.00			**2.00**	**72.00**
v	Construction of Range office	**No.**	**38**	**1709.00**	**2.64**	1.00	45.00			1.00	45.00			**2.00**	**90.00**
vi	Amenities for Woman Front line staff	**No.**	**19**	**266.00**	**0.41**	1.00	14.00	1.00	14.00	1.00	14.00	1.00	14.00	**4.00**	**56.00**
	Total New Constructions		**235**	**7062.00**	**10.90**	**6.00**	**165.00**	**4.00**	**84.00**	**6.00**	**165.00**	**4.00**	**84.00**	**20.00**	**498.00**
5(3)(f)(i)	Casual engagement of local people or labours to assist regular staff of State Forest Department for works for protection of forest and wildlife undertaken from State Fund	**No.**	**0**	**80.00**	**0.12**									**0.00**	**0.00**
5(3)(f)(ii)	Casual engagement of local people or labours to assist regular staff of State Forest Department for works for protection of forest and wildlife undertaken from State Fund (Mission Melghat)	**No.**	**0**	**225.00**	**0.35**									**0.00**	**0.00**
5(3)(g)	Survey and mapping of forest areas for forest fire control, compensatory afforestation works, soil and moisture conservation, catchment area treatment and wildlife management for preparing annual plans to be executed from the State Fund	**LS**	**0**	**100.00**	**0.15**									**0.00**	**0.00**
5(3)(h)	Independent concurrent monitoring and evaluation and third party monitoring of various works undertaken from State Fund	**LS**	**0**	**202.00**	**0.31**									**0.00**	**0.00**
5(3)(i)	Publicity-cum-awareness programme and exhibition on the various schemes being implemented by the State Authority from State Fund (including Nature Awareness Program conduct by METDB)	**LS**	**0**	**343.00**	**0.53**		2.00		2.00		2.00		2.00	**0.00**	**8.00**
5(3)(j)	Production and distribution of quality planting material through certified nurseries at subsidized price for promotion of trees outside forests on Government lands promoted by State Government {Saplings for planned afforestation activities in the area under control / management of the Central Armed Police Forces (CAPFs) (As per National Authority Instructions)}	**LS**	**0**	**200.00**	**0.31**									**0.00**	**0.00**
5(3)(k)	forest certification and development of certification standards	**LS**	**0**	**0.00**	**0.00**									**0.00**	**0.00**
	Total for works under not more than 20% component		**2032.33**	**12932.00**	**19.96**	**6.00**	**167.00**	**23.00**	**295.00**	**20.00**	**195.00**	**4.00**	**86.00**	**53.00**	**743.00**
	Grand Total for NPV			**64776.00**	**100.00**		**1064.00**		**1788.00**		**737.00**		**953.00**		**4542.00**

ANNUAL PLAN OF OPERATIONS 2022-23						COMPONENT WISE ALLOTMENT FOR NPV WORKS											
Annexure-VII-A						(Amount in Rs. Lakhs)											
Rule No.	Particulars of work	Proposed for APO 2022-23			%	Territorial Circles											
						Nashik											
						East Nashik		West Nashik		Ahmadnagar		Malegaon		Sangamner		Total	
		Unit in	Phy	Fin		Phy	Fin	Phy	Fin	Phy	Fin	Phy	Fin	Phy	Fin	Phy	Fin
1	2	3	4	5	6	85	86	87	88	89	90	91	92	93	94	95	96
5 (2)	**Works under Not less than 80 % component (Rule 5 (2))**																
5(2)(a)	**Assisted Natural Regeneration**																
i	PPO Works	**Ha**	**1321.000**	**2232.00**	**3.45**											**0.00**	**0.00**
ii	FYO Works	**Ha**	**820.000**	**572.00**	**0.88**			50.00	8.00			15.00	4.00			**65.00**	**12.00**
	Total of 5(2)(a)		**2141.000**	**2804.00**	**4.33**	**0.00**	**0.00**	**50.00**	**8.00**	**0.00**	**0.00**	**15.00**	**4.00**	**0.00**	**0.00**	**65.00**	**12.00**
5(2)(b)	**Artificial Regeneration**															**0.00**	**0.00**
i	Artificial Regeneration (PPO) (Mission Melghat)	**Ha.**	**75.000**	**82.50**	**0.13**												
ii	Artificial Regeneration 4th YO Works	**Ha**	**8531.930**	**1537.00**	**2.37**	197.00	35.00	280.00	50.00	340.00	61.00	225.00	41.00	228.00	41.00	**1270.00**	**228.00**
iii	Plantation along river banks (as per ICFRE DPR) (National Authority Scheme)	**LS**	**0**	**300.00**	**0.46**		40.00		40.00		40.00					**0.00**	**120.00**
iv	Afforestation in scrub and barren land (National Authority Scheme) LIDAR	**Ha**	**350.000**	**663.00**	**1.02**											**0.00**	**0.00**
v	Gramvan Plantation (Maintenance)	**Ha**	**61.000**	**11.00**	**0.02**											**0.00**	**0.00**
	Total for Artificial Regeneration		**9017.930**	**2593.50**	**4.00**	**197.00**	**75.00**	**280.00**	**90.00**	**340.00**	**101.00**	**225.00**	**41.00**	**228.00**	**41.00**	**1270.00**	**348.00**
5(2)(c)	**Silvicultural operations in forests**																
i	Fodder Development (PPO Works)	**Ha**	**1466.360**	**3343.00**	**5.16**			155.00	353.00							**155.00**	**353.00**
ii	Fodder Development (PPO Works) (Mission Melghat)	**Ha**	**200.000**	**200.00**	**0.31**											**0.00**	**0.00**
iii	Fodder Development (FYO Works)	**Ha**	**1874.000**	**2023.00**	**3.12**	150.00	162.00	295.00	319.00			215.00	232.00			**660.00**	**713.00**
iv	Fodder Development (SYO Works)	**Ha**	**2703.000**	**1975.00**	**3.05**	140.00	102.00			145.00	106.00	20.00	15.00	20.00	15.00	**325.00**	**238.00**
v	Cutback Operations	**Ha**	**90.000**	**8.00**	**0.01**											**0.00**	**0.00**
	Total for Silvicultural operations in forests		**6333.360**	**7549.00**	**11.65**	**290.00**	**264.00**	**450.00**	**672.00**	**145.00**	**106.00**	**235.00**	**247.00**	**20.00**	**15.00**	**1140.00**	**1304.00**

Rule No.	Particulars of work	Proposed for APO 2022-23			%	Territorial Circles											
						Nashik											
						East Nashik		West Nashik		Ahmadnagar		Malegaon		Sangamner		Total	
		Unit in	Phy	Fin		Phy	Fin	Phy	Fin	Phy	Fin	Phy	Fin	Phy	Fin	Phy	Fin
1	2	3	4	5	6	85	86	87	88	89	90	91	92	93	94	95	96
	Forest Protection																
5(2)(d)	**Protection of plantations and forests**																
i	Encroachment removal & Forest Protection	**Rmt**	**33054**	**1041.00**	**1.61**	2.00	20.00	8.00	80.00							**10.00**	**100.00**
ii	Survey, Demarcation & Fencing of Sensitive forest areas	**Rmt**	**70874**	**2834.00**	**4.38**	635.00	33.00	9262.00	815.00							**9897.00**	**848.00**
iii	Boundary Pillar Class I	**No.**	**18427**	**1475.00**	**2.28**											**0.00**	**0.00**
iv	Boundary Pillar Class I I	**No.**	**10304**	**413.00**	**0.64**											**0.00**	**0.00**
v	Construction, upgradation and maintenance of :																
(a)	Protection camps/Protection Huts	**No.**	**79**	**1580.00**	**2.44**											**0.00**	**0.00**
(b)	Forest Custody	**No.**	**6**	**138.00**	**0.21**	2.00	46.00									**2.00**	**46.00**
(c)	Labour Shed	**No.**	**48**	**316.00**	**0.49**											**0.00**	**0.00**
vi	Construction, upgradation and maintenance of Protection camps/Protection Huts/Forest Custody/Labour Shed (Mission Melghat)	**No.**		**340.00**	**0.52**												
vii	Establishment and maintenance of wireless networks	**No.**	**59**	**116.00**	**0.18**											**0.00**	**0.00**
viii	Establishment and maintenance of wireless networks (Mission Melghat)	**No.**	**24**	**60.00**	**0.09**											**0.00**	**0.00**
ix	Improving mobility of frontline staff for forest protection & patrolling.	**LS**	**0**	**148.00**	**0.23**		2.00		2.00		2.00		2.00		2.00	**0.00**	**10.00**
	Total for Protection of plantations and forests		**132875**	**8461.00**	**13.06**	**639.00**	**101.00**	**9270.00**	**897.00**	**0.00**	**2.00**	**0.00**	**2.00**	**0.00**	**2.00**	**9909.00**	**1004.00**
5(2)(e)	**Pest and disease control in forest**	**Ha.**	**63**	**2.00**	**0.00**											**0.00**	**0.00**
5(2)(f)	**Forest fire prevention and control operations**																
i	Cutting and burning of fire lines	**Km**	**26362**	**766.00**	**1.18**											**0.00**	**0.00**
ii	Fire watchers	**No.**	**28431**	**750.00**	**1.16**			22.00	14.00							**22.00**	**14.00**
	Total for Forest fire prevention and control operations		**54793**	**1516.00**	**2.34**	**0.00**	**0.00**	**22.00**	**14.00**	**0.00**	**0.00**	**0.00**	**0.00**	**0.00**	**0.00**	**22.00**	**14.00**
	Total for Forest Protection		**187731**	**9979.00**	**15.41**	**639.00**	**101.00**	**9292.00**	**911.00**	**0.00**	**2.00**	**0.00**	**2.00**	**0.00**	**2.00**	**9931.00**	**1018.00**

Rule No.	Particulars of work	Proposed for APO 2022-23			%	Territorial Circles											
						Nashik											
						East Nashik		West Nashik		Ahmadnagar		Malegaon		Sangamner		Total	
		Unit in	Phy	Fin		Phy	Fin	Phy	Fin	Phy	Fin	Phy	Fin	Phy	Fin	Phy	Fin
1	2	3	4	5	6	85	86	87	88	89	90	91	92	93	94	95	96
5(2)(g)	**Soil and moisture conservation works in the forest**																
i	Construction of Gabiyan Bandhara	**No.**	**1141**	**588.00**	**0.91**			50.00	25.00	40.00	20.00	18.00	9.00			**108.00**	**54.00**
ii	Construction of Gabiyan Bandhara (Mission Melghat)	**No.**	**654**	**261.50**	**0.40**											**0.00**	**0.00**
iii	Construction of Cement Bandhare	**No.**	**158**	**2370.00**	**3.66**	15.00	225.00	15.00	225.00			1.00	15.00			**31.00**	**465.00**
iv	Construction of Cement Bandhare (Mission Melghat)	**No.**	**80**	**800.00**	**1.24**											**0.00**	**0.00**
v	Construction of check dams	**No.**	**81**	**52.00**	**0.08**			10.00	4.50							**10.00**	**4.50**
vi	Creation of Forest ponds/Vantale/Khodtadi	**No.**	**379**	**1137.00**	**1.76**							12.00	36.00			**12.00**	**36.00**
vii	Deep CCT	**Ha/Rmt**	**1253 / 3345**	**769.00**	**1.19**	150.00	70.00	150.00	89.00	20.00	10.00	107.00	108.00			**427.00**	**277.00**
viii	Earthen/Mati Nala Bunds	**No.**	**247**	**747.00**	**1.15**	20.00	60.00	20.00	60.00	15.00	30.00	3.00	30.00	5.00	15.00	**63.00**	**195.00**
ix	Construction of LBS Structure (Mission Melghat)	**No.**	**500**	**90.00**	**0.14**											**0.00**	**0.00**
x	**Soil and Water Conservation / Harvesting works (National Authority Scheme) LIDAR (As per santioned DPR)**	**LS**	**0**	**1000.00**	**1.54**											**0.00**	**0.00**
	Total for SMC works		**3240**	**7814.50**	**12.06**	**185.00**	**355.00**	**245.00**	**403.50**	**75.00**	**60.00**	**141.00**	**198.00**	**5.00**	**15.00**	**651.00**	**1031.50**
	Wildlife Management & Man-animal conflict mitigation																
5(2)(h)	**Voluntary relocation of villages from Protected areas (including cost of land and other property of the field owners)**	**No.**	**48**	**10000.00**	**15.44**											**0.00**	**0.00**
5(2)(i)	**Improvement of wildlife habitat as provided in the approved wildlife management plan or working plan**																
i	All wildlife Management works will be carried out as per approved Management plan	**No.**	**15**	**4000.00**	**6.18**											**0.00**	**0.00**
ii	Medow development	**Ha.**	**2809.370**	**784.00**	**1.21**											**0.00**	**0.00**
iii	Creation & maintenance of water sources/water holes for wildlife	**No.**	**1142**	**764.00**	**1.18**	9.00	18.00	42.00	57.00			47.00	52.00			**98.00**	**127.00**
iv	Creation & maintenance of water sources/water holes for wildlife (Mission Melghat)	**No.**		**120.00**	**0.19**											**0.00**	**0.00**
v	Eradication of invasive species	**Ha.**	**8302.300**	**884.00**	**1.36**											**0.00**	**0.00**
vi	Eradication of invasive species (Mission Melghat)	**Ha.**	**1600.000**	**272.00**	**0.42**											**0.00**	**0.00**
	Total for Improvement of wildlife habitat		**13869**	**6824.00**	**10.53**	**9.00**	**18.00**	**42.00**	**57.00**	**0.00**	**0.00**	**47.00**	**52.00**	**0.00**	**0.00**	**98.00**	**127.00**

Rule No.	Particulars of work	Proposed for APO 2022-23			%	Territorial Circles											
						Nashik											
						East Nashik		West Nashik		Ahmadnagar		Malegaon		Sangamner		Total	
		Unit in	Phy	Fin		Phy	Fin	Phy	Fin	Phy	Fin	Phy	Fin	Phy	Fin	Phy	Fin
1	2	3	4	5	6	85	86	87	88	89	90	91	92	93	94	95	96
5(2)(j)	Planting and rejuvenation of forest cover on non-forest land falling in wildlife corridors	LS	0	3.00	0.00											0.00	0.00
5(2)(k)	**Establishment, operation and maintenance of animal rescue centre and veterinary treatment facilities for wild animals**																
i	Establishment, operation and maintenance of animal rescue centre/ Transit treatment Centre (Imcluding Provision for Gorewada)	No./LS	13	1377.00	2.13											0.00	0.00
ii	Veterinary treatment facilities for wild animals (Imcluding Provision for Gorewada)	No./LS	4	304.00	0.47											0.00	0.00
iii	Animal seizing & capturing devices	No./LS	189	406.00	0.63											0.00	0.00
iv	Rescue emergency operations	No./LS	6	426.00	0.66											0.00	0.00
v	Strengthening of Rapid rescue teams	No./LS	6	197.00	0.30											0.00	0.00
vi	Management of rewilding of tiger cubs	LS	0	40.00	0.06											0.00	0.00
	Total		**218**	**2750.00**	**4.25**	**0.00**	**0.00**	**0.00**	**0.00**	**0.00**	**0.00**	**0.00**	**0.00**	**0.00**	**0.00**	**0.00**	**0.00**
5(2)(l)	Supply of wood-saving cooking appliances and other forest produce saving devices in forest fringe villages as specified by the National Authority from time to time	No.	7250	135.00	0.21											0.00	0.00
	Total for Wildlife Management & Man-animal conflict mitigation		**21385**	**19712.00**	**30.43**	**9.00**	**18.00**	**42.00**	**57.00**	**0.00**	**0.00**	**47.00**	**52.00**	**0.00**	**0.00**	**98.00**	**127.00**
5(2)(m)	**Management of biological diversity and biological resource**																
i	New research projects and Maintenance of Ongoing Project by research wing of Maharashtra Forest Department	No.	11	357.00	0.55											0.00	0.00
ii	Base studies for forestry and wildlife related subjects	No.	4	158.00	0.24											0.00	0.00
iii	Conservation of Wildlife like GIB, Wild buffalo, Turtle, Vultures, Owl, Sparrow, etc.	No.	5	877.00	1.35											0.00	0.00
	Total		**20**	**1392.00**	**2.15**	**0.00**	**0.00**	**0.00**	**0.00**	**0.00**	**0.00**	**0.00**	**0.00**	**0.00**	**0.00**	**0.00**	**0.00**
	Grand Total for Activities under not less than 80% component		**229868**	**51844.00**	**80.04**	**1320.00**	**813.00**	**10359.00**	**2141.50**	**560.00**	**269.00**	**663.00**	**544.00**	**253.00**	**73.00**	**13155.00**	**3840.50**

Rule No.	Particulars of work	Proposed for APO 2022-23			%	Territorial Circles											
						Nashik											
						East Nashik		West Nashik		Ahmadnagar		Malegaon		Sangamner		Total	
		Unit in	Phy	Fin		Phy	Fin	Phy	Fin	Phy	Fin	Phy	Fin	Phy	Fin	Phy	Fin
1	2	3	4	5	6	85	86	87	88	89	90	91	92	93	94	95	96
5 (3)	**Works under not more than 20 % component (Rule 5 (3))**																
5(3)(a)(i)	**Establishment, up-gradation and maintenance of modern nurseries and other planting stock production facilities for production of quality planting materials**	**No.**	**10**	**150.00**	**0.23**											**0.00**	**0.00**
5(3)(a)(ii)	**Establishment, up-gradation and maintenance of modern nurseries and other planting stock production facilities for production of quality planting materials (Mission Melghat)**	**No.**		**90.00**	**0.14**											**0.00**	**0.00**
	Total of 5(3)(a)		**10**	**240.00**	**0.37**	**0.00**	**0.00**	**0.00**	**0.00**	**0.00**	**0.00**	**0.00**	**0.00**	**0.00**	**0.00**	**0.00**	**0.00**
5(3)(b)	**Promoting conservation, sustainable use and documentation of biological diversity including preservation of habitats, conservation of land and folk varieties and cultivars, domesticated stocks and breeds of animals and microorganisms and chronicling of knowledge relating to biological diversity**																
i	Documentation and Publications of study materials for FTIs	**LS**	**0**	**60.00**	**0.09**											**0.00**	**0.00**
ii	Conducting Workshops/Trainings/Seminars/ Conferences for promoting conservation & sustainable use of biological diversity and capacity building of the frontline staff & officers.	**No.**	**48**	**165.00**	**0.25**											**0.00**	**0.00**
iii	Capacity building and gender sensitization of Forest Staff's through FTI /TERI/Forest academies/other institutions/CFRMC/JFMC /PRI	**No.**	**476**	**2000.00**	**3.09**											**0.00**	**0.00**
iv	Improving training inputs through guest faculties in Forest Training Institutes / Forest Academies	**LS**	**0**	**20.00**	**0.03**											**0.00**	**0.00**
	Total		**524**	**2245.00**	**3.47**	**0.00**	**0.00**	**0.00**	**0.00**	**0.00**	**0.00**	**0.00**	**0.00**	**0.00**	**0.00**	**0.00**	**0.00**
5(3)(c)	Purchase and maintenance of equipment or devices used for communication and information technology for the purpose of protection of forest and wildlife/AMC		**0**	**950.00**	**1.47**											**0.00**	**0.00**
5(3)(d)	**Construction, up-gradation and maintenance of :**																
i	Inspection paths/Forest roads in forest area,	**Km/No**	**1121**	**296.00**	**0.46**											**0.00**	**0.00**
ii	flush causway	**No.**	**101**	**380.00**	**0.59**											**0.00**	**0.00**
iii	watch towers,	**No.**	**30**	**300.00**	**0.46**	2.00	20.00	2.00	20.00							**4.00**	**40.00**
iv	Check posts/Check Naka	**No.**	**11**	**99.00**	**0.15**	3.00	27.00									**3.00**	**27.00**
v	**Construction, up-gradation and maintenance of Inspection paths/Forest roads in forest area/flush causway/watch towers /Check posts/Check Naka (Mission Melghat)**	**No.**		**210.00**	**0.32**											**0.00**	**0.00**
	Total of 5(3)(d)		**1263**	**1285.00**	**1.98**	**5.00**	**47.00**	**2.00**	**20.00**	**0.00**	**0.00**	**0.00**	**0.00**	**0.00**	**0.00**	**7.00**	**67.00**

Rule No.	Particulars of work	Proposed for APO 2022-23			%	Territorial Circles											
						Nashik											
						East Nashik		West Nashik		Ahmadnagar		Malegaon		Sangamner		Total	
		Unit in	Phy	Fin		Phy	Fin	Phy	Fin	Phy	Fin	Phy	Fin	Phy	Fin	Phy	Fin
1	2	3	4	5	6	85	86	87	88	89	90	91	92	93	94	95	96
5(3)(e)	**Construction of residential and official buildings in forests for front line staffs deployed for protection of forest and wildlife**																
i	Construction of Type I Quarters	**No.**	**91**	**2002.00**	**3.09**	2.00	44.00	2.00	44.00	1.00	22.00	2.00	44.00			**7.00**	**154.00**
ii	Construction of Type-1 (G+2) 4 Units Residental Building for Special Tiger Protection Force (STPF)	**No.**	**3**	**541.00**	**0.84**											**0.00**	**0.00**
iii	Construction of Type II Quarters	**No.**	**48**	**1248.00**	**1.93**	1.00	26.00	1.00	26.00	1.00	26.00	1.00	26.00			**4.00**	**104.00**
iv	Construction of Type III Quarters	**No.**	**36**	**1296.00**	**2.00**	1.00	36.00	1.00	36.00					1.00	36.00	**3.00**	**108.00**
v	Construction of Range office	**No.**	**38**	**1709.00**	**2.64**	1.00	45.00	1.00	45.00	1.00	45.00			1.00	45.00	**4.00**	**180.00**
vi	Amenities for Woman Front line staff	**No.**	**19**	**266.00**	**0.41**	1.00	14.00									**1.00**	**14.00**
	Total New Constructions		**235**	**7062.00**	**10.90**	**6.00**	**165.00**	**5.00**	**151.00**	**3.00**	**93.00**	**3.00**	**70.00**	**2.00**	**81.00**	**19.00**	**560.00**
5(3)(f)(i)	Casual engagement of local people or labours to assist regular staff of State Forest Department for works for protection of forest and wildlife undertaken from State Fund	**No.**	**0**	**80.00**	**0.12**											**0.00**	**0.00**
5(3)(f)(ii)	Casual engagement of local people or labours to assist regular staff of State Forest Department for works for protection of forest and wildlife undertaken from State Fund (Mission Melghat)	**No.**	**0**	**225.00**	**0.35**											**0.00**	**0.00**
5(3)(g)	Survey and mapping of forest areas for forest fire control, compensatory afforestation works, soil and moisture conservation, catchment area treatment and wildlife management for preparing annual plans to be executed from the State Fund	**LS**	**0**	**100.00**	**0.15**											**0.00**	**0.00**
5(3)(h)	Independent concurrent monitoring and evaluation and third party monitoring of various works undertaken from State Fund	**LS**	**0**	**202.00**	**0.31**											**0.00**	**0.00**
5(3)(i)	Publicity-cum-awareness programme and exhibition on the various schemes being implemented by the State Authority from State Fund (including Nature Awareness Program conduct by METDB)	**LS**	**0**	**343.00**	**0.53**		2.00		2.00		2.00		2.00		2.00	**0.00**	**10.00**
5(3)(j)	Production and distribution of quality planting material through certified nurseries at subsidized price for promotion of trees outside forests on Government lands promoted by State Government {Saplings for planned afforestation activities in the area under control / management of the Central Armed Police Forces (CAPFs) (As per National Authority Instructions)}	**LS**	**0**	**200.00**	**0.31**											**0.00**	**0.00**
5(3)(k)	forest certification and development of certification standards	**LS**	**0**	**0.00**	**0.00**											**0.00**	**0.00**
	Total for works under not more than 20% component		**2032.33**	**12932.00**	**19.96**	**11.00**	**214.00**	**7.00**	**173.00**	**3.00**	**95.00**	**3.00**	**72.00**	**2.00**	**83.00**	**26.00**	**637.00**
	Grand Total for NPV			**64776.00**	**100.00**		**1027.00**		**2314.50**		**364.00**		**616.00**		**156.00**		**4477.50**

ANNUAL PLAN OF OPERATIONS 2022-23						COMPONENT WISE ALLOTMENT FOR NPV WORKS									
Annexure-VII-A						(Amount in Rs. Lakhs)									
Rule No.	Particulars of work	Proposed for APO 2022-23			%	Territorial Circles									
						Pune									
						Pune		Junnar		Bhor		Solapur		Total	
		Unit in	Phy	Fin		Phy	Fin	Phy	Fin	Phy	Fin	Phy	Fin	Phy	Fin
1	2	3	4	5	6	97	98	99	100	101	102	103	104	105	106
5 (2)	**Works under Not less than 80 % component (Rule 5 (2))**														
5(2)(a)	**Assisted Natural Regeneration**														
i	PPO Works	**Ha**	**1321.000**	**2232.00**	**3.45**			73.00	123.00			213.00	360.00	**286.00**	**483.00**
ii	FYO Works	**Ha**	**820.000**	**572.00**	**0.88**									**0.00**	**0.00**
	Total of 5(2)(a)		**2141.000**	**2804.00**	**4.33**	**0.00**	**0.00**	**73.00**	**123.00**	**0.00**	**0.00**	**213.00**	**360.00**	**286.00**	**483.00**
5(2)(b)	**Artificial Regeneration**														
i	Artificial Regeneration (PPO) (Mission Melghat)	**Ha.**	**75.000**	**82.50**	**0.13**										
ii	Artificial Regeneration 4th YO Works	**Ha**	**8531.930**	**1537.00**	**2.37**	200.00	36.00	250.00	45.00	50.00	9.00	250.00	45.00	**750.00**	**135.00**
iii	Plantation along river banks (as per ICFRE DPR) (National Authority Scheme)	**LS**	**0**	**300.00**	**0.46**									**0.00**	**0.00**
iv	Afforestation in scrub and barren land (National Authority Scheme) LIDAR	**Ha**	**350.000**	**663.00**	**1.02**									**0.00**	**0.00**
v	Gramvan Plantation (Maintenance)	**Ha**	**61.000**	**11.00**	**0.02**	11.00	2.00							**11.00**	**2.00**
	Total for Artificial Regeneration		**9017.930**	**2593.50**	**4.00**	**211.00**	**38.00**	**250.00**	**45.00**	**50.00**	**9.00**	**250.00**	**45.00**	**761.00**	**137.00**
5(2)(c)	**Silvicultural operations in forests**														
i	Fodder Development (PPO Works)	**Ha**	**1466.360**	**3343.00**	**5.16**									**0.00**	**0.00**
ii	Fodder Development (PPO Works) (Mission Melghat)	**Ha**	**200.000**	**200.00**	**0.31**									**0.00**	**0.00**
iii	Fodder Development (FYO Works)	**Ha**	**1874.000**	**2023.00**	**3.12**							205.00	221.00	**205.00**	**221.00**
iv	Fodder Development (SYO Works)	**Ha**	**2703.000**	**1975.00**	**3.05**	30.00	22.00					286.00	209.00	**316.00**	**231.00**
v	Cutback Operations	**Ha**	**90.000**	**8.00**	**0.01**			90.00	8.00					**90.00**	**8.00**
	Total for Silvicultural operations in forests		**6333.360**	**7549.00**	**11.65**	**30.00**	**22.00**	**90.00**	**8.00**	**0.00**	**0.00**	**491.00**	**430.00**	**611.00**	**460.00**

Rule No.	Particulars of work	Proposed for APO 2022-23			%	Territorial Circles									
						Pune									
						Pune		Junnar		Bhor		Solapur		Total	
		Unit in	Phy	Fin		Phy	Fin	Phy	Fin	Phy	Fin	Phy	Fin	Phy	Fin
1	2	3	4	5	6	97	98	99	100	101	102	103	104	105	106
	Forest Protection														
5(2)(d)	**Protection of plantations and forests**														
i	Encroachment removal & Forest Protection	**Rmt**	**33054**	**1041.00**	**1.61**							831.00	333.00	**831.00**	**333.00**
ii	Survey, Demarcation & Fencing of Sensitive forest areas	**Rmt**	**70874**	**2834.00**	**4.38**	8200.00	48.00	6200.00	86.00	400.00	8.00	10150.00	421.00	**24950.00**	**563.00**
iii	Boundary Pillar Class I	**No.**	**18427**	**1475.00**	**2.28**	50.00	4.00							**50.00**	**4.00**
iv	Boundary Pillar Class I I	**No.**	**10304**	**413.00**	**0.64**	125.00	5.00							**125.00**	**5.00**
v	Construction, upgradation and maintenance of :														
(a)	Protection camps/Protection Huts	**No.**	**79**	**1580.00**	**2.44**	5.00	100.00							**5.00**	**100.00**
(b)	Forest Custody	**No.**	**6**	**138.00**	**0.21**									**0.00**	**0.00**
(c)	Labour Shed	**No.**	**48**	**316.00**	**0.49**	1.00	6.00					3.00	18.00	**4.00**	**24.00**
vi	Construction, upgradation and maintenance of Protection camps/Protection Huts/Forest Custody/Labour Shed (Mission Melghat)	**No.**		**340.00**	**0.52**										
vii	Establishment and maintenance of wireless networks	**No.**	**59**	**116.00**	**0.18**									**0.00**	**0.00**
viii	Establishment and maintenance of wireless networks (Mission Melghat)	**No.**	**24**	**60.00**	**0.09**									**0.00**	**0.00**
ix	Improving mobility of frontline staff for forest protection & patrolling.	**LS**	**0**	**148.00**	**0.23**		2.00		2.00		2.00		2.00	**0.00**	**8.00**
	Total for Protection of plantations and forests		**132875**	**8461.00**	**13.06**	**8381.00**	**165.00**	**6200.00**	**88.00**	**400.00**	**10.00**	**10984.00**	**774.00**	**25965.00**	**1037.00**
5(2)(e)	**Pest and disease control in forest**	**Ha.**	**63**	**2.00**	**0.00**			63.00	2.00					**63.00**	**2.00**
5(2)(f)	**Forest fire prevention and control operations**														
i	Cutting and burning of fire lines	**Km**	**26362**	**766.00**	**1.18**	4000.00	17.00	646.03	13.00	660.00	30.00	1042.05	5.00	**6348.08**	**65.00**
ii	Fire watchers	**No.**	**28431**	**750.00**	**1.16**	80.00	54.00	102.00	46.00					**182.00**	**100.00**
	Total for Forest fire prevention and control operations		**54793**	**1516.00**	**2.34**	**4080.00**	**71.00**	**748.03**	**59.00**	**660.00**	**30.00**	**1042.05**	**5.00**	**6530.08**	**165.00**
	Total for Forest Protection		**187731**	**9979.00**	**15.41**	**12461.00**	**236.00**	**7011.03**	**149.00**	**1060.00**	**40.00**	**12026.05**	**779.00**	**32558.08**	**1204.00**

Rule No.	Particulars of work	Proposed for APO 2022-23			%	Territorial Circles									
						Pune									
						Pune		Junnar		Bhor		Solapur		Total	
		Unit in	Phy	Fin		Phy	Fin	Phy	Fin	Phy	Fin	Phy	Fin	Phy	Fin
1	2	3	4	5	6	97	98	99	100	101	102	103	104	105	106
5(2)(g)	**Soil and moisture conservation works in the forest**														
i	Construction of Gabiyan Bandhara	**No.**	**1141**	**588.00**	**0.91**	50.00	25.00	50.00	25.00	50.00	25.00			**150.00**	**75.00**
ii	Construction of Gabiyan Bandhara (Mission Melghat)	**No.**	**654**	**261.50**	**0.40**									**0.00**	**0.00**
iii	Construction of Cement Bandhare	**No.**	**158**	**2370.00**	**3.66**	6.00	90.00	2.00	30.00					**8.00**	**120.00**
iv	Construction of Cement Bandhare (Mission Melghat)	**No.**	**80**	**800.00**	**1.24**									**0.00**	**0.00**
v	Construction of check dams	**No.**	**81**	**52.00**	**0.08**	10.00	4.50	10.00	4.50	10.00	4.50	10.00	4.50	**40.00**	**18.00**
vi	Creation of Forest ponds/Vantale/Khodtadi	**No.**	**379**	**1137.00**	**1.76**	20.00	60.00	20.00	60.00	2.00	6.00			**42.00**	**126.00**
vii	Deep CCT	**Ha/Rmt**	**1253 / 3345**	**769.00**	**1.19**	130.00	67.00			3345.00	9.00	62.00	14.00	**3537.00**	**90.00**
viii	Earthen/Mati Nala Bunds	**No.**	**247**	**747.00**	**1.15**	15.00	45.00	14.00	42.00	3.00	9.00	15.00	45.00	**47.00**	**141.00**
ix	Construction of LBS Structure (Mission Melghat)	**No.**	**500**	**90.00**	**0.14**									**0.00**	**0.00**
x	**Soil and Water Conservation / Harvesting works (National Authority Scheme) LIDAR (As per santioned DPR)**	**LS**	**0**	**1000.00**	**1.54**									**0.00**	**0.00**
	Total for SMC works		**3240**	**7814.50**	**12.06**	**231.00**	**291.50**	**96.00**	**161.50**	**3410.00**	**53.50**	**87.00**	**63.50**	**3824.00**	**570.00**
	Wildlife Management & Man-animal conflict mitigation														
5(2)(h)	**Voluntary relocation of villages from Protected areas (including cost of land and other property of the field owners)**	**No.**	**48**	**10000.00**	**15.44**									**0.00**	**0.00**
5(2)(i)	**Improvement of wildlife habitat as provided in the approved wildlife management plan or working plan**														
i	All wildlife Management works will be carried out as per approved Management plan	**No.**	**15**	**4000.00**	**6.18**									**0.00**	**0.00**
ii	Medow development	**Ha.**	**2809.370**	**784.00**	**1.21**									**0.00**	**0.00**
iii	Creation & maintenance of water sources/water holes for wildlife	**No.**	**1142**	**764.00**	**1.18**	63.00	46.00	66.00	70.00	4.00	12.00	54.00	23.00	**187.00**	**151.00**
iv	Creation & maintenance of water sources/water holes for wildlife (Mission Melghat)	**No.**		**120.00**	**0.19**									**0.00**	**0.00**
v	Eradication of invasive species	**Ha.**	**8302.300**	**884.00**	**1.36**	65.00	13.00			100.00	20.00			**165.00**	**33.00**
vi	Eradication of invasive species (Mission Melghat)	**Ha.**	**1600.000**	**272.00**	**0.42**									**0.00**	**0.00**
	Total for Improvement of wildlife habitat		**13869**	**6824.00**	**10.53**	**128.00**	**59.00**	**66.00**	**70.00**	**104.00**	**32.00**	**54.00**	**23.00**	**352.00**	**184.00**

Rule No.	Particulars of work	Proposed for APO 2022-23			%	Territorial Circles									
						Pune									
						Pune		Junnar		Bhor		Solapur		Total	
		Unit in	Phy	Fin		Phy	Fin	Phy	Fin	Phy	Fin	Phy	Fin	Phy	Fin
1	2	3	4	5	6	97	98	99	100	101	102	103	104	105	106
5(2)(j)	Planting and rejuvenation of forest cover on non-forest land falling in wildlife corridors	LS	0	3.00	0.00									0.00	0.00
5(2)(k)	**Establishment, operation and maintenance of animal rescue centre and veterinary treatment facilities for wild animals**														
i	Establishment, operation and maintenance of animal rescue centre/ Transit treatment Centre (Imcluding Provision for Gorewada)	No./LS	13	1377.00	2.13									0.00	0.00
ii	Veterinary treatment facilities for wild animals (Imcluding Provision for Gorewada)	No./LS	4	304.00	0.47				115.00					0.00	115.00
iii	Animal seizing & capturing devices	No./LS	189	406.00	0.63	17.00	78.00		60.00		15.00			17.00	153.00
iv	Rescue emergency operations	No./LS	6	426.00	0.66				64.00		12.00			0.00	76.00
v	Strengthening of Rapid rescue teams	No./LS	6	197.00	0.30						22.00			0.00	22.00
vi	Management of rewilding of tiger cubs	LS	0	40.00	0.06									0.00	0.00
	Total		218	2750.00	4.25	17.00	78.00	0.00	239.00	0.00	49.00	0.00	0.00	17.00	366.00
5(2)(l)	Supply of wood-saving cooking appliances and other forest produce saving devices in forest fringe villages as specified by the National Authority from time to time	No.	7250	135.00	0.21									0.00	0.00
	Total for Wildlife Management & Man-animal conflict mitigation		21385	19712.00	30.43	145.00	137.00	66.00	309.00	104.00	81.00	54.00	23.00	369.00	550.00
5(2)(m)	**Management of biological diversity and biological resource**														
i	New research projects and Maintenance of Ongoing Project by research wing of Maharashtra Forest Department	No.	11	357.00	0.55									0.00	0.00
ii	Base studies for forestry and wildlife related subjects	No.	4	158.00	0.24									0.00	0.00
iii	Conservation of Wildlife like GIB, Wild buffalo, Turtle, Vultures, Owl, Sparrow, etc.	No.	5	877.00	1.35									0.00	0.00
	Total		20	1392.00	2.15	0.00	0.00	0.00	0.00	0.00	0.00	0.00	0.00	0.00	0.00
	Grand Total for Activities under not less than 80% component		229868	51844.00	80.04	13078.00	724.50	7586.03	795.50	4624.00	183.50	13121.05	1700.50	38409.08	3404.00

Rule No.	Particulars of work	Proposed for APO 2022-23			%	Territorial Circles									
						Pune									
						Pune		Junnar		Bhor		Solapur		Total	
		Unit in	Phy	Fin		Phy	Fin	Phy	Fin	Phy	Fin	Phy	Fin	Phy	Fin
1	2	3	4	5	6	97	98	99	100	101	102	103	104	105	106
5 (3)	**Works under not more than 20 % component (Rule 5 (3))**														
5(3)(a)(i)	**Establishment, up-gradation and maintenance of modern nurseries and other planting stock production facilities for production of quality planting materials**	No.	10	150.00	0.23			3.00	30.00	1.00	10.00			4.00	40.00
5(3)(a)(ii)	**Establishment, up-gradation and maintenance of modern nurseries and other planting stock production facilities for production of quality planting materials (Mission Melghat)**	No.		90.00	0.14									0.00	0.00
	Total of 5(3)(a)		10	240.00	0.37	0.00	0.00	3.00	30.00	1.00	10.00	0.00	0.00	4.00	40.00
5(3)(b)	**Promoting conservation, sustainable use and documentation of biological diversity including preservation of habitats, conservation of land and folk varieties and cultivars, domesticated stocks and breeds of animals and microorganisms and chronicling of knowledge relating to biological diversity**														
i	Documentation and Publications of study materials for FTIs	LS	0	60.00	0.09									0.00	0.00
ii	Conducting Workshops/Trainings/Seminars/ Conferences for promoting conservation & sustainable use of biological diversity and capacity building of the frontline staff & officers.	No.	48	165.00	0.25									0.00	0.00
iii	Capacity building and gender sensitization of Forest Staff's through FTI /TERI/Forest academies/other institutions/CFRMC/JFMC /PRI	No.	476	2000.00	3.09									0.00	0.00
iv	Improving training inputs through guest faculties in Forest Training Institutes / Forest Academies	LS	0	20.00	0.03									0.00	0.00
	Total		524	2245.00	3.47	0.00	0.00	0.00	0.00	0.00	0.00	0.00	0.00	0.00	0.00
5(3)(c)	Purchase and maintenance of equipment or devices used for communication and information technology for the purpose of protection of forest and wildlife/AMC		0	950.00	1.47									0.00	0.00
5(3)(d)	**Construction, up-gradation and maintenance of :**														
i	Inspection paths/Forest roads in forest area,	Km/No	1121	296.00	0.46			2.00	7.00					2.00	7.00
ii	flush causway	No.	101	380.00	0.59									0.00	0.00
iii	watch towers,	No.	30	300.00	0.46							2.00	20.00	2.00	20.00
iv	Check posts/Check Naka	No.	11	99.00	0.15			1.00	9.00					1.00	9.00
v	**Construction, up-gradation and maintenance of Inspection paths/Forest roads in forest area/flush causway/watch towers /Check posts/Check Naka (Mission Melghat)**	No.		210.00	0.32									0.00	0.00
	Total of 5(3)(d)		1263	1285.00	1.98	0.00	0.00	3.00	16.00	0.00	0.00	2.00	20.00	5.00	36.00

Rule No.	Particulars of work	Proposed for APO 2022-23			%	Territorial Circles									
						Pune									
						Pune		Junnar		Bhor		Solapur		Total	
		Unit in	Phy	Fin		Phy	Fin	Phy	Fin	Phy	Fin	Phy	Fin	Phy	Fin
1	2	3	4	5	6	97	98	99	100	101	102	103	104	105	106
5(3)(e)	**Construction of residential and official buildings in forests for front line staffs deployed for protection of forest and wildlife**														
i	Construction of Type I Quarters	**No.**	**91**	**2002.00**	**3.09**	1.00	22.00	1.00	22.00			1.00	22.00	**3.00**	**66.00**
ii	Construction of Type-1 (G+2) 4 Units Residental Building for Special Tiger Protection Force (STPF)	**No.**	**3**	**541.00**	**0.84**									**0.00**	**0.00**
iii	Construction of Type II Quarters	**No.**	**48**	**1248.00**	**1.93**	1.00	26.00					1.00	26.00	**2.00**	**52.00**
iv	Construction of Type III Quarters	**No.**	**36**	**1296.00**	**2.00**	1.00	36.00							**1.00**	**36.00**
v	Construction of Range office	**No.**	**38**	**1709.00**	**2.64**	1.00	44.00							**1.00**	**44.00**
vi	Amenities for Woman Front line staff	**No.**	**19**	**266.00**	**0.41**									**0.00**	**0.00**
	Total New Constructions		**235**	**7062.00**	**10.90**	**4.00**	**128.00**	**1.00**	**22.00**	**0.00**	**0.00**	**2.00**	**48.00**	**7.00**	**198.00**
5(3)(f)(i)	Casual engagement of local people or labours to assist regular staff of State Forest Department for works for protection of forest and wildlife undertaken from State Fund	**No.**	**0**	**80.00**	**0.12**									**0.00**	**0.00**
5(3)(f)(ii)	Casual engagement of local people or labours to assist regular staff of State Forest Department for works for protection of forest and wildlife undertaken from State Fund (Mission Melghat)	**No.**	**0**	**225.00**	**0.35**									**0.00**	**0.00**
5(3)(g)	Survey and mapping of forest areas for forest fire control, compensatory afforestation works, soil and moisture conservation, catchment area treatment and wildlife management for preparing annual plans to be executed from the State Fund	**LS**	**0**	**100.00**	**0.15**									**0.00**	**0.00**
5(3)(h)	Independent concurrent monitoring and evaluation and third party monitoring of various works undertaken from State Fund	**LS**	**0**	**202.00**	**0.31**									**0.00**	**0.00**
5(3)(i)	Publicity-cum-awareness programme and exhibition on the various schemes being implemented by the State Authority from State Fund (including Nature Awareness Program conduct by METDB)	**LS**	**0**	**343.00**	**0.53**		2.00		2.00		2.00		2.00	**0.00**	**8.00**
5(3)(j)	Production and distribution of quality planting material through certified nurseries at subsidized price for promotion of trees outside forests on Government lands promoted by State Government {Saplings for planned afforestation activities in the area under control / management of the Central Armed Police Forces (CAPFs) (As per National Authority Instructions)}	**LS**	**0**	**200.00**	**0.31**									**0.00**	**0.00**
5(3)(k)	forest certification and development of certification standards	**LS**	**0**	**0.00**	**0.00**									**0.00**	**0.00**
	Total for works under not more than 20% component		**2032.33**	**12932.00**	**19.96**	**4.00**	**130.00**	**7.00**	**70.00**	**1.00**	**12.00**	**4.00**	**70.00**	**16.00**	**282.00**
	Grand Total for NPV			**64776.00**	**100.00**		**854.50**		**865.50**		**195.50**		**1770.50**		**3686.00**

ANNUAL PLAN OF OPERATIONS 2022-23						COMPONENT WISE ALLOTMENT FOR NPV WORKS													
Annexure-VII-A						(Amount in Rs. Lakhs)													
Rule No.	Particulars of work	Proposed for APO 2022-23			%	Territorial Circles													
						Thane													
						Thane		Dahanu		Shahapur		Jawhar		Alibag		Roha		Total	
		Unit in	Phy	Fin		Phy	Fin	Phy	Fin	Phy	Fin	Phy	Fin	Phy	Fin	Phy	Fin	Phy	Fin
1	2	3	4	5	6	107	108	109	110	111	112	113	114	115	116	117	118	119	120
5 (2)	**Works under Not less than 80 % component (Rule 5 (2))**																		
5(2)(a)	**Assisted Natural Regeneration**																		
i	PPO Works	Ha	1321.000	2232.00	3.45													0.00	0.00
ii	FYO Works	Ha	820.000	572.00	0.88	40.00	6.00							145.00	23.00			185.00	29.00
	Total of 5(2)(a)		2141.000	2804.00	4.33	40.00	6.00	0.00	0.00	0.00	0.00	0.00	0.00	145.00	23.00	0.00	0.00	185.00	29.00
5(2)(b)	**Artificial Regeneration**																		
i	Artificial Regeneration (PPO) (Mission Melghat)	Ha.	75.000	82.50	0.13														
ii	Artificial Regeneration 4th YO Works	Ha	8531.930	1537.00	2.37	15.00	3.00	161.00	29.00	160.00	29.00	25.00	5.00	40.00	7.00			401.00	73.00
iii	Plantation along river banks (as per ICFRE DPR) (National Authority Scheme)	LS	0	300.00	0.46													0.00	0.00
iv	Afforestation in scrub and barren land (National Authority Scheme) LIDAR	Ha	350.000	663.00	1.02													0.00	0.00
v	Gramvan Plantation (Maintenance)	Ha	61.000	11.00	0.02													0.00	0.00
	Total for Artificial Regeneration		9017.930	2593.50	4.00	15.00	3.00	161.00	29.00	160.00	29.00	25.00	5.00	40.00	7.00	0.00	0.00	401.00	73.00
5(2)(c)	**Silvicultural operations in forests**																		
i	Fodder Development (PPO Works)	Ha	1466.360	3343.00	5.16													0.00	0.00
ii	Fodder Development (PPO Works) (Mission Melghat)	Ha	200.000	200.00	0.31													0.00	0.00
iii	Fodder Development (FYO Works)	Ha	1874.000	2023.00	3.12													0.00	0.00
iv	Fodder Development (SYO Works)	Ha	2703.000	1975.00	3.05													0.00	0.00
v	Cutback Operations	Ha	90.000	8.00	0.01													0.00	0.00
	Total for Silvicultural operations in forests		6333.360	7549.00	11.65	0.00	0.00	0.00	0.00	0.00	0.00	0.00	0.00	0.00	0.00	0.00	0.00	0.00	0.00

Rule No.	Particulars of work	Proposed for APO 2022-23			%	Territorial Circles													
						Thane													
						Thane		Dahanu		Shahapur		Jawhar		Alibag		Roha		Total	
		Unit in	Phy	Fin		Phy	Fin	Phy	Fin	Phy	Fin	Phy	Fin	Phy	Fin	Phy	Fin	Phy	Fin
1	2	3	4	5	6	107	108	109	110	111	112	113	114	115	116	117	118	119	120
	Forest Protection																		
5(2)(d)	**Protection of plantations and forests**																		
i	Encroachment removal & Forest Protection	**Rmt**	**33054**	**1041.00**	**1.61**	900.00	117.00											**900.00**	**117.00**
ii	Survey, Demarcation & Fencing of Sensitive forest areas	**Rmt**	**70874**	**2834.00**	**4.38**	3160.00	411.00							583.00	171.00			**3743.00**	**582.00**
iii	Boundary Pillar Class I	**No.**	**18427**	**1475.00**	**2.28**									900.00	72.00			**900.00**	**72.00**
iv	Boundary Pillar Class I I	**No.**	**10304**	**413.00**	**0.64**									605.00	24.00			**605.00**	**24.00**
v	Construction, upgradation and maintenance of :																		
(a)	Protection camps/Protection Huts	**No.**	**79**	**1580.00**	**2.44**	5.00	100.00											**5.00**	**100.00**
(b)	Forest Custody	**No.**	**6**	**138.00**	**0.21**													**0.00**	**0.00**
(c)	Labour Shed	**No.**	**48**	**316.00**	**0.49**	1.00	6.00									1.00	6.00	**2.00**	**12.00**
vi	Construction, upgradation and maintenance of Protection camps/Protection Huts/Forest Custody/Labour Shed (Mission Melghat)	**No.**		**340.00**	**0.52**														
vii	Establishment and maintenance of wireless networks	**No.**	**59**	**116.00**	**0.18**													**0.00**	**0.00**
viii	Establishment and maintenance of wireless networks (Mission Melghat)	**No.**	**24**	**60.00**	**0.09**													**0.00**	**0.00**
ix	Improving mobility of frontline staff for forest protection & patrolling.	**LS**	**0**	**148.00**	**0.23**		2.00		2.00		2.00		2.00		2.00		2.00	**0.00**	**12.00**
	Total for Protection of plantations and forests		**132875**	**8461.00**	**13.06**	**4066.00**	**636.00**	**0.00**	**2.00**	**0.00**	**2.00**	**0.00**	**2.00**	**2088.00**	**269.00**	**1.00**	**8.00**	**6155.00**	**919.00**
5(2)(e)	**Pest and disease control in forest**	**Ha.**	**63**	**2.00**	**0.00**													**0.00**	**0.00**
5(2)(f)	**Forest fire prevention and control operations**																		
i	Cutting and burning of fire lines	**Km**	**26362**	**766.00**	**1.18**	1500.92	126.00					1000.17	19.00					**2501.09**	**145.00**
ii	Fire watchers	**No.**	**28431**	**750.00**	**1.16**							71.00	11.00	264.00	30.00			**335.00**	**41.00**
	Total for Forest fire prevention and control operations		**54793**	**1516.00**	**2.34**	**1500.92**	**126.00**	**0.00**	**0.00**	**0.00**	**0.00**	**1071.17**	**30.00**	**264.00**	**30.00**	**0.00**	**0.00**	**2836.09**	**186.00**
	Total for Forest Protection		**187731**	**9979.00**	**15.41**	**5566.92**	**762.00**	**0.00**	**2.00**	**0.00**	**2.00**	**1071.17**	**32.00**	**2352.00**	**299.00**	**1.00**	**8.00**	**8991.09**	**1105.00**

Rule No.	Particulars of work	Proposed for APO 2022-23			%	Territorial Circles													
						Thane													
						Thane		Dahanu		Shahapur		Jawhar		Alibag		Roha		Total	
		Unit in	Phy	Fin		Phy	Fin	Phy	Fin	Phy	Fin	Phy	Fin	Phy	Fin	Phy	Fin	Phy	Fin
1	2	3	4	5	6	107	108	109	110	111	112	113	114	115	116	117	118	119	120
5(2)(g)	**Soil and moisture conservation works in the forest**																		
i	Construction of Gabiyan Bandhara	**No.**	**1141**	**588.00**	**0.91**	50.00	25.00											**50.00**	**25.00**
ii	Construction of Gabiyan Bandhara (Mission Melghat)	**No.**	**654**	**261.50**	**0.40**													**0.00**	**0.00**
iii	Construction of Cement Bandhare	**No.**	**158**	**2370.00**	**3.66**	10.00	150.00							13.00	195.00			**23.00**	**345.00**
iv	Construction of Cement Bandhare (Mission Melghat)	**No.**	**80**	**800.00**	**1.24**													**0.00**	**0.00**
v	Construction of check dams	**No.**	**81**	**52.00**	**0.08**													**0.00**	**0.00**
vi	Creation of Forest ponds/Vantale/Khodtadi	**No.**	**379**	**1137.00**	**1.76**									11.00	33.00			**11.00**	**33.00**
vii	Deep CCT	**Ha/Rmt**	**1253 / 3345**	**769.00**	**1.19**	4.00	40.00											**4.00**	**40.00**
viii	Earthen/Mati Nala Bunds	**No.**	**247**	**747.00**	**1.15**													**0.00**	**0.00**
ix	Construction of LBS Structure (Mission Melghat)	**No.**	**500**	**90.00**	**0.14**													**0.00**	**0.00**
x	**Soil and Water Conservation / Harvesting works (National Authority Scheme) LIDAR (As per santioned DPR)**	**LS**	**0**	**1000.00**	**1.54**													**0.00**	**0.00**
	Total for SMC works		**3240**	**7814.50**	**12.06**	**64.00**	**215.00**	**0.00**	**0.00**	**0.00**	**0.00**	**0.00**	**0.00**	**24.00**	**228.00**	**0.00**	**0.00**	**88.00**	**443.00**
	Wildlife Management & Man-animal conflict mitigation																		
5(2)(h)	**Voluntary relocation of villages from Protected areas (including cost of land and other property of the field owners)**	**No.**	**48**	**10000.00**	**15.44**													**0.00**	**0.00**
5(2)(i)	**Improvement of wildlife habitat as provided in the approved wildlife management plan or working plan**																		
i	All wildlife Management works will be carried out as per approved Management plan	**No.**	**15**	**4000.00**	**6.18**													**0.00**	**0.00**
ii	Medow development	**Ha.**	**2809.370**	**784.00**	**1.21**													**0.00**	**0.00**
iii	Creation & maintenance of water sources/water holes for wildlife	**No.**	**1142**	**764.00**	**1.18**	80.00	80.00											**80.00**	**80.00**
iv	Creation & maintenance of water sources/water holes for wildlife (Mission Melghat)	**No.**		**120.00**	**0.19**													**0.00**	**0.00**
v	Eradication of invasive species	**Ha.**	**8302.300**	**884.00**	**1.36**													**0.00**	**0.00**
vi	Eradication of invasive species (Mission Melghat)	**Ha.**	**1600.000**	**272.00**	**0.42**													**0.00**	**0.00**
	Total for Improvement of wildlife habitat		**13869**	**6824.00**	**10.53**	**80.00**	**80.00**	**0.00**	**0.00**	**0.00**	**0.00**	**0.00**	**0.00**	**0.00**	**0.00**	**0.00**	**0.00**	**80.00**	**80.00**

Rule No.	Particulars of work	Proposed for APO 2022-23			%	Territorial Circles													
						Thane													
						Thane		Dahanu		Shahapur		Jawhar		Alibag		Roha		Total	
		Unit in	Phy	Fin		Phy	Fin	Phy	Fin	Phy	Fin	Phy	Fin	Phy	Fin	Phy	Fin	Phy	Fin
1	2	3	4	5	6	107	108	109	110	111	112	113	114	115	116	117	118	119	120
5(2)(j)	Planting and rejuvenation of forest cover on non-forest land falling in wildlife corridors	LS	0	3.00	0.00													0.00	0.00
5(2)(k)	**Establishment, operation and maintenance of animal rescue centre and veterinary treatment facilities for wild animals**																		
i	Establishment, operation and maintenance of animal rescue centre/ Transit treatment Centre (Imcluding Provision for Gorewada)	No./LS	13	1377.00	2.13		15.00											0.00	15.00
ii	Veterinary treatment facilities for wild animals (Imcluding Provision for Gorewada)	No./LS	4	304.00	0.47		5.00											0.00	5.00
iii	Animal seizing & capturing devices	No./LS	189	406.00	0.63		50.00											0.00	50.00
iv	Rescue emergency operations	No./LS	6	426.00	0.66		21.00											0.00	21.00
v	Strengthening of Rapid rescue teams	No./LS	6	197.00	0.30													0.00	0.00
vi	Management of rewilding of tiger cubs	LS	0	40.00	0.06													0.00	0.00
	Total		218	2750.00	4.25	0.00	91.00	0.00	0.00	0.00	0.00	0.00	0.00	0.00	0.00	0.00	0.00	0.00	91.00
5(2)(l)	Supply of wood-saving cooking appliances and other forest produce saving devices in forest fringe villages as specified by the National Authority from time to time	No.	7250	135.00	0.21													0.00	0.00
	Total for Wildlife Management & Man-animal conflict mitigation		21385	19712.00	30.43	80.00	171.00	0.00	0.00	0.00	0.00	0.00	0.00	0.00	0.00	0.00	0.00	80.00	171.00
5(2)(m)	**Management of biological diversity and biological resource**																		
i	New research projects and Maintenance of Ongoing Project by research wing of Maharashtra Forest Department	No.	11	357.00	0.55													0.00	0.00
ii	Base studies for forestry and wildlife related subjects	No.	4	158.00	0.24													0.00	0.00
iii	Conservation of Wildlife like GIB, Wild buffalo, Turtle, Vultures, Owl, Sparrow, etc.	No.	5	877.00	1.35												7.00	0.00	7.00
	Total		20	1392.00	2.15	0.00	0.00	0.00	0.00	0.00	0.00	0.00	0.00	0.00	0.00	0.00	7.00	0.00	7.00
	Grand Total for Activities under not less than 80% component		229868	51844.00	80.04	5765.92	1157.00	161.00	31.00	160.00	31.00	1096.17	37.00	2561.00	557.00	1.00	15.00	9745.09	1828.00

Rule No.	Particulars of work	Proposed for APO 2022-23			%	Territorial Circles													
						Thane													
						Thane		Dahanu		Shahapur		Jawhar		Alibag		Roha		Total	
		Unit in	Phy	Fin		Phy	Fin	Phy	Fin	Phy	Fin	Phy	Fin	Phy	Fin	Phy	Fin	Phy	Fin
1	2	3	4	5	6	107	108	109	110	111	112	113	114	115	116	117	118	119	120
5 (3)	**Works under not more than 20 % component (Rule 5 (3))**																		
5(3)(a)(i)	**Establishment, up-gradation and maintenance of modern nurseries and other planting stock production facilities for production of quality planting materials**	**No.**	**10**	**150.00**	**0.23**													**0.00**	**0.00**
5(3)(a)(ii)	**Establishment, up-gradation and maintenance of modern nurseries and other planting stock production facilities for production of quality planting materials (Mission Melghat)**	**No.**		**90.00**	**0.14**													**0.00**	**0.00**
	Total of 5(3)(a)		**10**	**240.00**	**0.37**	**0.00**	**0.00**	**0.00**	**0.00**	**0.00**	**0.00**	**0.00**	**0.00**	**0.00**	**0.00**	**0.00**	**0.00**	**0.00**	**0.00**
5(3)(b)	**Promoting conservation, sustainable use and documentation of biological diversity including preservation of habitats, conservation of land and folk varieties and cultivars, domesticated stocks and breeds of animals and microorganisms and chronicling of knowledge relating to biological diversity**																		
i	Documentation and Publications of study materials for FTIs	**LS**	**0**	**60.00**	**0.09**													**0.00**	**0.00**
ii	Conducting Workshops/Trainings/Seminars/ Conferences for promoting conservation & sustainable use of biological diversity and capacity building of the frontline staff & officers.	**No.**	**48**	**165.00**	**0.25**													**0.00**	**0.00**
iii	Capacity building and gender sensitization of Forest Staff's through FTI /TERI/Forest academies/other institutions/CFRMC/JFMC /PRI	**No.**	**476**	**2000.00**	**3.09**													**0.00**	**0.00**
iv	Improving training inputs through guest faculties in Forest Training Institutes / Forest Academies	**LS**	**0**	**20.00**	**0.03**													**0.00**	**0.00**
	Total		**524**	**2245.00**	**3.47**	**0.00**	**0.00**	**0.00**	**0.00**	**0.00**	**0.00**	**0.00**	**0.00**	**0.00**	**0.00**	**0.00**	**0.00**	**0.00**	**0.00**
5(3)(c)	Purchase and maintenance of equipment or devices used for communication and information technology for the purpose of protection of forest and wildlife/AMC		**0**	**950.00**	**1.47**													**0.00**	**0.00**
5(3)(d)	**Construction, up-gradation and maintenance of :**																		
i	Inspection paths/Forest roads in forest area,	**Km/No**	**1121**	**296.00**	**0.46**									2.00	77.00			**2.00**	**77.00**
ii	flush causway	**No.**	**101**	**380.00**	**0.59**													**0.00**	**0.00**
iii	watch towers,	**No.**	**30**	**300.00**	**0.46**	2.00	20.00							2.00	20.00			**4.00**	**40.00**
iv	Check posts/Check Naka	**No.**	**11**	**99.00**	**0.15**													**0.00**	**0.00**
v	**Construction, up-gradation and maintenance of Inspection paths/Forest roads in forest area/flush causway/watch towers /Check posts/Check Naka (Mission Melghat)**	**No.**		**210.00**	**0.32**													**0.00**	**0.00**
	Total of 5(3)(d)		**1263**	**1285.00**	**1.98**	**2.00**	**20.00**	**0.00**	**0.00**	**0.00**	**0.00**	**0.00**	**0.00**	**4.00**	**97.00**	**0.00**	**0.00**	**6.00**	**117.00**

Rule No.	Particulars of work	Proposed for APO 2022-23			%	Territorial Circles													
						Thane													
						Thane		Dahanu		Shahapur		Jawhar		Alibag		Roha		Total	
		Unit in	Phy	Fin		Phy	Fin	Phy	Fin	Phy	Fin	Phy	Fin	Phy	Fin	Phy	Fin	Phy	Fin
1	2	3	4	5	6	107	108	109	110	111	112	113	114	115	116	117	118	119	120
5(3)(e)	**Construction of residential and official buildings in forests for front line staffs deployed for protection of forest and wildlife**																		
i	Construction of Type I Quarters	**No.**	**91**	**2002.00**	**3.09**	2.00	44.00							2.00	44.00			**4.00**	**88.00**
ii	Construction of Type-1 (G+2) 4 Units Residental Building for Special Tiger Protection Force (STPF)	**No.**	**3**	**541.00**	**0.84**													**0.00**	**0.00**
iii	Construction of Type II Quarters	**No.**	**48**	**1248.00**	**1.93**	1.00	26.00					1.00	26.00	1.00	26.00			**3.00**	**78.00**
iv	Construction of Type III Quarters	**No.**	**36**	**1296.00**	**2.00**	1.00	36.00					1.00	36.00	1.00	36.00	1.00	36.00	**4.00**	**144.00**
v	Construction of Range office	**No.**	**38**	**1709.00**	**2.64**	1.00	45.00					1.00	45.00	1.00	45.00	1.00	45.00	**4.00**	**180.00**
vi	Amenities for Woman Front line staff	**No.**	**19**	**266.00**	**0.41**									1.00	14.00			**1.00**	**14.00**
	Total New Constructions		**235**	**7062.00**	**10.90**	**5.00**	**151.00**	**0.00**	**0.00**	**0.00**	**0.00**	**3.00**	**107.00**	**6.00**	**165.00**	**2.00**	**81.00**	**16.00**	**504.00**
5(3)(f)(i)	Casual engagement of local people or labours to assist regular staff of State Forest Department for works for protection of forest and wildlife undertaken from State Fund	**No.**	**0**	**80.00**	**0.12**													**0.00**	**0.00**
5(3)(f)(ii)	Casual engagement of local people or labours to assist regular staff of State Forest Department for works for protection of forest and wildlife undertaken from State Fund (Mission Melghat)	**No.**	**0**	**225.00**	**0.35**													**0.00**	**0.00**
5(3)(g)	Survey and mapping of forest areas for forest fire control, compensatory afforestation works, soil and moisture conservation, catchment area treatment and wildlife management for preparing annual plans to be executed from the State Fund	**LS**	**0**	**100.00**	**0.15**													**0.00**	**0.00**
5(3)(h)	Independent concurrent monitoring and evaluation and third party monitoring of various works undertaken from State Fund	**LS**	**0**	**202.00**	**0.31**													**0.00**	**0.00**
5(3)(i)	Publicity-cum-awareness programme and exhibition on the various schemes being implemented by the State Authority from State Fund (including Nature Awareness Program conduct by METDB)	**LS**	**0**	**343.00**	**0.53**		2.00		2.00		2.00		2.00		2.00		2.00	**0.00**	**12.00**
5(3)(j)	Production and distribution of quality planting material through certified nurseries at subsidized price for promotion of trees outside forests on Government lands promoted by State Government {Saplings for planned afforestation activities in the area under control / management of the Central Armed Police Forces (CAPFs) (As per National Authority Instructions)}	**LS**	**0**	**200.00**	**0.31**													**0.00**	**0.00**
5(3)(k)	forest certification and development of certification standards	**LS**	**0**	**0.00**	**0.00**													**0.00**	**0.00**
	Total for works under not more than 20% component		**2032.33**	**12932.00**	**19.96**	**7.00**	**173.00**	**0.00**	**2.00**	**0.00**	**2.00**	**3.00**	**109.00**	**10.00**	**264.00**	**2.00**	**83.00**	**22.00**	**633.00**
	Grand Total for NPV			**64776.00**	**100.00**		**1330.00**		**33.00**		**33.00**		**146.00**		**821.00**		**98.00**		**2461.00**

ANNUAL PLAN OF OPERATIONS 2022-23						COMPONENT WISE ALLOTMENT FOR NPV WORKS									
Annexure-VII-A						(Amount in Rs. Lakhs)									
Rule No.	Particulars of work	Proposed for APO 2022-23			%	Territorial Circles									
						Yavatmal									
						Yavatmal		Pandharkawada		Pusad		Washim		Total	
		Unit in	Phy	Fin		Phy	Fin	Phy	Fin	Phy	Fin	Phy	Fin	Phy	Fin
1	2	3	4	5	6	121	122	123	124	125	126	127	128	129	130
5 (2)	**Works under Not less than 80 % component (Rule 5 (2))**														
5(2)(a)	**Assisted Natural Regeneration**														
i	PPO Works	Ha	1321.000	2232.00	3.45	180.00	304.00							180.00	304.00
ii	FYO Works	Ha	820.000	572.00	0.88									0.00	0.00
	Total of 5(2)(a)		2141.000	2804.00	4.33	180.00	304.00	0.00	0.00	0.00	0.00	0.00	0.00	180.00	304.00
5(2)(b)	**Artificial Regeneration**														
i	Artificial Regeneration (PPO) (Mission Melghat)	Ha.	75.000	82.50	0.13										
ii	Artificial Regeneration 4th YO Works	Ha	8531.930	1537.00	2.37	132.00	24.00	215.00	39.00	252.48	45.00	87.00	16.00	686.48	124.00
iii	Plantation along river banks (as per ICFRE DPR) (National Authority Scheme)	LS	0	300.00	0.46									0.00	0.00
iv	Afforestation in scrub and barren land (National Authority Scheme) LIDAR	Ha	350.000	663.00	1.02									0.00	0.00
v	Gramvan Plantation (Maintenance)	Ha	61.000	11.00	0.02									0.00	0.00
	Total for Artificial Regeneration		9017.930	2593.50	4.00	132.00	24.00	215.00	39.00	252.48	45.00	87.00	16.00	686.48	124.00
5(2)(c)	**Silvicultural operations in forests**														
i	Fodder Development (PPO Works)	Ha	1466.360	3343.00	5.16	110.00	251.00	20.00	46.00			75.00	171.00	205.00	468.00
ii	Fodder Development (PPO Works) (Mission Melghat)	Ha	200.000	200.00	0.31									0.00	0.00
iii	Fodder Development (FYO Works)	Ha	1874.000	2023.00	3.12	249.00	269.00							249.00	269.00
iv	Fodder Development (SYO Works)	Ha	2703.000	1975.00	3.05	309.00	226.00	185.00	135.00	245.00	179.00	145.00	106.00	884.00	646.00
v	Cutback Operations	Ha	90.000	8.00	0.01									0.00	0.00
	Total for Silvicultural operations in forests		6333.360	7549.00	11.65	668.00	746.00	205.00	181.00	245.00	179.00	220.00	277.00	1338.00	1383.00

Rule No.	Particulars of work	Proposed for APO 2022-23			%	Territorial Circles									
						Yavatmal									
						Yavatmal		Pandharkawada		Pusad		Washim		Total	
		Unit in	Phy	Fin		Phy	Fin	Phy	Fin	Phy	Fin	Phy	Fin	Phy	Fin
1	2	3	4	5	6	121	122	123	124	125	126	127	128	129	130
	Forest Protection														
5(2)(d)	**Protection of plantations and forests**														
i	Encroachment removal & Forest Protection	**Rmt**	**33054**	**1041.00**	**1.61**							20.00	14.00	**20.00**	**14.00**
ii	Survey, Demarcation & Fencing of Sensitive forest areas	**Rmt**	**70874**	**2834.00**	**4.38**					5000.00	2.00	1200.00	24.00	**6200.00**	**26.00**
iii	Boundary Pillar Class I	**No.**	**18427**	**1475.00**	**2.28**	582.00	47.00	1484.00	119.00	490.00	39.00	250.00	20.00	**2806.00**	**225.00**
iv	Boundary Pillar Class I I	**No.**	**10304**	**413.00**	**0.64**	904.00	36.00	2579.00	103.00	350.00	14.00	250.00	10.00	**4083.00**	**163.00**
v	Construction, upgradation and maintenance of :														
(a)	Protection camps/Protection Huts	**No.**	**79**	**1580.00**	**2.44**			3.00	60.00					**3.00**	**60.00**
(b)	Forest Custody	**No.**	**6**	**138.00**	**0.21**									**0.00**	**0.00**
(c)	Labour Shed	**No.**	**48**	**316.00**	**0.49**			3.00	18.00			3.00	18.00	**6.00**	**36.00**
vi	Construction, upgradation and maintenance of Protection camps/Protection Huts/Forest Custody/Labour Shed (Mission Melghat)	**No.**		**340.00**	**0.52**										
vii	Establishment and maintenance of wireless networks	**No.**	**59**	**116.00**	**0.18**									**0.00**	**0.00**
viii	Establishment and maintenance of wireless networks (Mission Melghat)	**No.**	**24**	**60.00**	**0.09**									**0.00**	**0.00**
ix	Improving mobility of frontline staff for forest protection & patrolling.	**LS**	**0**	**148.00**	**0.23**		2.00		2.00		2.00		2.00	**0.00**	**8.00**
	Total for Protection of plantations and forests		**132875**	**8461.00**	**13.06**	**1486.00**	**85.00**	**4069.00**	**302.00**	**5840.00**	**57.00**	**1723.00**	**88.00**	**13118.00**	**532.00**
5(2)(e)	**Pest and disease control in forest**	**Ha.**	**63**	**2.00**	**0.00**									**0.00**	**0.00**
5(2)(f)	**Forest fire prevention and control operations**														
i	Cutting and burning of fire lines	**Km**	**26362**	**766.00**	**1.18**			127.72	11.00	905.00	22.00	900.00	27.00	**1932.72**	**60.00**
ii	Fire watchers	**No.**	**28431**	**750.00**	**1.16**	3.00	4.00	10.00	11.00	117.00	45.00			**130.00**	**60.00**
	Total for Forest fire prevention and control operations		**54793**	**1516.00**	**2.34**	**3.00**	**4.00**	**137.72**	**22.00**	**1022.00**	**67.00**	**900.00**	**27.00**	**2062.72**	**120.00**
	Total for Forest Protection		**187731**	**9979.00**	**15.41**	**1489.00**	**89.00**	**4206.72**	**324.00**	**6862.00**	**124.00**	**2623.00**	**115.00**	**15180.72**	**652.00**

Rule No.	Particulars of work	Proposed for APO 2022-23			%	Territorial Circles									
						Yavatmal									
						Yavatmal		Pandharkawada		Pusad		Washim		Total	
		Unit in	Phy	Fin		Phy	Fin	Phy	Fin	Phy	Fin	Phy	Fin	Phy	Fin
1	2	3	4	5	6	121	122	123	124	125	126	127	128	129	130
5(2)(g)	**Soil and moisture conservation works in the forest**														
i	Construction of Gabiyan Bandhara	No.	1141	588.00	0.91	50.00	25.00	40.00	20.00	50.00	25.00	50.00	25.00	190.00	95.00
ii	Construction of Gabiyan Bandhara (Mission Melghat)	No.	654	261.50	0.40									0.00	0.00
iii	Construction of Cement Bandhare	No.	158	2370.00	3.66	10.00	150.00	1.00	15.00					11.00	165.00
iv	Construction of Cement Bandhare (Mission Melghat)	No.	80	800.00	1.24									0.00	0.00
v	Construction of check dams	No.	81	52.00	0.08									0.00	0.00
vi	Creation of Forest ponds/Vantale/Khodtadi	No.	379	1137.00	1.76	20.00	60.00			20.00	60.00	20.00	60.00	60.00	180.00
vii	Deep CCT	Ha/Rmt	1253 / 3345	769.00	1.19	68.00	23.00					150.00	75.00	218.00	98.00
viii	Earthen/Mati Nala Bunds	No.	247	747.00	1.15	1.00	3.00			16.00	48.00			17.00	51.00
ix	Construction of LBS Structure (Mission Melghat)	No.	500	90.00	0.14									0.00	0.00
x	**Soil and Water Conservation / Harvesting works (National Authority Scheme) LIDAR (As per santioned DPR)**	LS	0	1000.00	1.54									0.00	0.00
	Total for SMC works		3240	7814.50	12.06	149.00	261.00	41.00	35.00	86.00	133.00	220.00	160.00	496.00	589.00
	Wildlife Management & Man-animal conflict mitigation														
5(2)(h)	**Voluntary relocation of villages from Protected areas (including cost of land and other property of the field owners)**	No.	48	10000.00	15.44									0.00	0.00
5(2)(i)	**Improvement of wildlife habitat as provided in the approved wildlife management plan or working plan**														
i	All wildlife Management works will be carried out as per approved Management plan	No.	15	4000.00	6.18									0.00	0.00
ii	Medow development	Ha.	2809.370	784.00	1.21									0.00	0.00
iii	Creation & maintenance of water sources/water holes for wildlife	No.	1142	764.00	1.18					34.00	34.00			34.00	34.00
iv	Creation & maintenance of water sources/water holes for wildlife (Mission Melghat)	No.		120.00	0.19									0.00	0.00
v	Eradication of invasive species	Ha.	8302.300	884.00	1.36									0.00	0.00
vi	Eradication of invasive species (Mission Melghat)	Ha.	1600.000	272.00	0.42									0.00	0.00
	Total for Improvement of wildlife habitat		13869	6824.00	10.53	0.00	0.00	0.00	0.00	34.00	34.00	0.00	0.00	34.00	34.00

Rule No.	Particulars of work	Proposed for APO 2022-23			%	Territorial Circles									
						Yavatmal									
						Yavatmal		Pandharkawada		Pusad		Washim		Total	
		Unit in	Phy	Fin		Phy	Fin	Phy	Fin	Phy	Fin	Phy	Fin	Phy	Fin
1	2	3	4	5	6	121	122	123	124	125	126	127	128	129	130
5(2)(j)	Planting and rejuvenation of forest cover on non-forest land falling in wildlife corridors	LS	0	3.00	0.00									0.00	0.00
5(2)(k)	**Establishment, operation and maintenance of animal rescue centre and veterinary treatment facilities for wild animals**														
i	Establishment, operation and maintenance of animal rescue centre/ Transit treatment Centre (Imcluding Provision for Gorewada)	No./LS	13	1377.00	2.13	4.00	2.00					1.00	1.00	5.00	3.00
ii	Veterinary treatment facilities for wild animals (Imcluding Provision for Gorewada)	No./LS	4	304.00	0.47						3.00			0.00	3.00
iii	Animal seizing & capturing devices	No./LS	189	406.00	0.63					95.00	27.00	21.00	5.00	116.00	32.00
iv	Rescue emergency operations	No./LS	6	426.00	0.66									0.00	0.00
v	Strengthening of Rapid rescue teams	No./LS	6	197.00	0.30							1.00	1.00	1.00	1.00
vi	Management of rewilding of tiger cubs	LS	0	40.00	0.06									0.00	0.00
	Total		218	2750.00	4.25	4.00	2.00	0.00	0.00	95.00	30.00	23.00	7.00	122.00	39.00
5(2)(l)	Supply of wood-saving cooking appliances and other forest produce saving devices in forest fringe villages as specified by the National Authority from time to time	No.	7250	135.00	0.21									0.00	0.00
	Total for Wildlife Management & Man-animal conflict mitigation		21385	19712.00	30.43	4.00	2.00	0.00	0.00	129.00	64.00	23.00	7.00	156.00	73.00
5(2)(m)	**Management of biological diversity and biological resource**														
i	New research projects and Maintenance of Ongoing Project by research wing of Maharashtra Forest Department	No.	11	357.00	0.55									0.00	0.00
ii	Base studies for forestry and wildlife related subjects	No.	4	158.00	0.24									0.00	0.00
iii	Conservation of Wildlife like GIB, Wild buffalo, Turtle, Vultures, Owl, Sparrow, etc.	No.	5	877.00	1.35									0.00	0.00
	Total		20	1392.00	2.15	0.00	0.00	0.00	0.00	0.00	0.00	0.00	0.00	0.00	0.00
	Grand Total for Activities under not less than 80% component		229868	51844.00	80.04	2622.00	1426.00	4667.72	579.00	7574.48	545.00	3173.00	575.00	18037.20	3125.00

Rule No.	Particulars of work	Proposed for APO 2022-23			%	Territorial Circles									
						Yavatmal									
						Yavatmal		Pandharkawada		Pusad		Washim		Total	
		Unit in	Phy	Fin		Phy	Fin	Phy	Fin	Phy	Fin	Phy	Fin	Phy	Fin
1	2	3	4	5	6	121	122	123	124	125	126	127	128	129	130
5 (3)	**Works under not more than 20 % component (Rule 5 (3))**														
5(3)(a)(i)	**Establishment, up-gradation and maintenance of modern nurseries and other planting stock production facilities for production of quality planting materials**	**No.**	**10**	**150.00**	**0.23**									**0.00**	**0.00**
5(3)(a)(ii)	**Establishment, up-gradation and maintenance of modern nurseries and other planting stock production facilities for production of quality planting materials (Mission Melghat)**	**No.**		**90.00**	**0.14**									**0.00**	**0.00**
	Total of 5(3)(a)		**10**	**240.00**	**0.37**	**0.00**	**0.00**	**0.00**	**0.00**	**0.00**	**0.00**	**0.00**	**0.00**	**0.00**	**0.00**
5(3)(b)	**Promoting conservation, sustainable use and documentation of biological diversity including preservation of habitats, conservation of land and folk varieties and cultivars, domesticated stocks and breeds of animals and microorganisms and chronicling of knowledge relating to biological diversity**														
i	Documentation and Publications of study materials for FTIs	**LS**	**0**	**60.00**	**0.09**									**0.00**	**0.00**
ii	Conducting Workshops/Trainings/Seminars/ Conferences for promoting conservation & sustainable use of biological diversity and capacity building of the frontline staff & officers.	**No.**	**48**	**165.00**	**0.25**									**0.00**	**0.00**
iii	Capacity building and gender sensitization of Forest Staff's through FTI /TERI/Forest academies/other institutions/CFRMC/JFMC /PRI	**No.**	**476**	**2000.00**	**3.09**									**0.00**	**0.00**
iv	Improving training inputs through guest faculties in Forest Training Institutes / Forest Academies	**LS**	**0**	**20.00**	**0.03**									**0.00**	**0.00**
	Total		**524**	**2245.00**	**3.47**	**0.00**	**0.00**	**0.00**	**0.00**	**0.00**	**0.00**	**0.00**	**0.00**	**0.00**	**0.00**
5(3)(c)	Purchase and maintenance of equipment or devices used for communication and information technology for the purpose of protection of forest and wildlife/AMC		**0**	**950.00**	**1.47**									**0.00**	**0.00**
5(3)(d)	**Construction, up-gradation and maintenance of :**														
i	Inspection paths/Forest roads in forest area,	**Km/No**	**1121**	**296.00**	**0.46**									**0.00**	**0.00**
ii	flush causway	**No.**	**101**	**380.00**	**0.59**									**0.00**	**0.00**
iii	watch towers,	**No.**	**30**	**300.00**	**0.46**	1.00	10.00	1.00	10.00	1.00	10.00			**3.00**	**30.00**
iv	Check posts/Check Naka	**No.**	**11**	**99.00**	**0.15**									**0.00**	**0.00**
v	**Construction, up-gradation and maintenance of Inspection paths/Forest roads in forest area/flush causway/watch towers /Check posts/Check Naka (Mission Melghat)**	**No.**		**210.00**	**0.32**									**0.00**	**0.00**
	Total of 5(3)(d)		**1263**	**1285.00**	**1.98**	**1.00**	**10.00**	**1.00**	**10.00**	**1.00**	**10.00**	**0.00**	**0.00**	**3.00**	**30.00**

Rule No.	Particulars of work	Proposed for APO 2022-23			%	Territorial Circles									
						Yavatmal									
						Yavatmal		Pandharkawada		Pusad		Washim		Total	
		Unit in	Phy	Fin		Phy	Fin	Phy	Fin	Phy	Fin	Phy	Fin	Phy	Fin
1	2	3	4	5	6	121	122	123	124	125	126	127	128	129	130
5(3)(e)	**Construction of residential and official buildings in forests for front line staffs deployed for protection of forest and wildlife**														
i	Construction of Type I Quarters	**No.**	**91**	**2002.00**	**3.09**	2.00	44.00	2.00	44.00	2.00	44.00	2.00	44.00	**8.00**	**176.00**
ii	Construction of Type-1 (G+2) 4 Units Residental Building for Special Tiger Protection Force (STPF)	**No.**	**3**	**541.00**	**0.84**									**0.00**	**0.00**
iii	Construction of Type II Quarters	**No.**	**48**	**1248.00**	**1.93**	1.00	26.00	1.00	26.00			1.00	26.00	**3.00**	**78.00**
iv	Construction of Type III Quarters	**No.**	**36**	**1296.00**	**2.00**	1.00	36.00	1.00	36.00			1.00	36.00	**3.00**	**108.00**
v	Construction of Range office	**No.**	**38**	**1709.00**	**2.64**	1.00	45.00	1.00	45.00	1.00	45.00	1.00	45.00	**4.00**	**180.00**
vi	Amenities for Woman Front line staff	**No.**	**19**	**266.00**	**0.41**			1.00	14.00			1.00	14.00	**2.00**	**28.00**
	Total New Constructions		**235**	**7062.00**	**10.90**	**5.00**	**151.00**	**6.00**	**165.00**	**3.00**	**89.00**	**6.00**	**165.00**	**20.00**	**570.00**
5(3)(f)(i)	Casual engagement of local people or labours to assist regular staff of State Forest Department for works for protection of forest and wildlife undertaken from State Fund	**No.**	**0**	**80.00**	**0.12**									**0.00**	**0.00**
5(3)(f)(ii)	Casual engagement of local people or labours to assist regular staff of State Forest Department for works for protection of forest and wildlife undertaken from State Fund (Mission Melghat)	**No.**	**0**	**225.00**	**0.35**									**0.00**	**0.00**
5(3)(g)	Survey and mapping of forest areas for forest fire control, compensatory afforestation works, soil and moisture conservation, catchment area treatment and wildlife management for preparing annual plans to be executed from the State Fund	**LS**	**0**	**100.00**	**0.15**									**0.00**	**0.00**
5(3)(h)	Independent concurrent monitoring and evaluation and third party monitoring of various works undertaken from State Fund	**LS**	**0**	**202.00**	**0.31**									**0.00**	**0.00**
5(3)(i)	Publicity-cum-awareness programme and exhibition on the various schemes being implemented by the State Authority from State Fund (including Nature Awareness Program conduct by METDB)	**LS**	**0**	**343.00**	**0.53**		2.00		2.00		2.00		2.00	**0.00**	**8.00**
5(3)(j)	Production and distribution of quality planting material through certified nurseries at subsidized price for promotion of trees outside forests on Government lands promoted by State Government {Saplings for planned afforestation activities in the area under control / management of the Central Armed Police Forces (CAPFs) (As per National Authority Instructions)}	**LS**	**0**	**200.00**	**0.31**									**0.00**	**0.00**
5(3)(k)	forest certification and development of certification standards	**LS**	**0**	**0.00**	**0.00**									**0.00**	**0.00**
	Total for works under not more than 20% component		**2032.33**	**12932.00**	**19.96**	**6.00**	**163.00**	**7.00**	**177.00**	**4.00**	**101.00**	**6.00**	**167.00**	**23.00**	**608.00**
	Grand Total for NPV			**64776.00**	**100.00**		**1589.00**		**756.00**		**646.00**		**742.00**		**3733.00**

ANNUAL PLAN OF OPERATIONS 2022-23						COMPONENT WISE ALLOTMENT FOR NPV WORKS									
Annexure-VII-A						(Amount in Rs. Lakhs)									
Rule No.	Particulars of work	Proposed for APO 2022-23			%	Wildlife circle									
						WL Nagpur									
						PTR		BTR		TATR		NNTR		Total	
		Unit in	Phy	Fin		Phy	Fin	Phy	Fin	Phy	Fin	Phy	Fin	Phy	Fin
1	2	3	4	5	6	131	132	133	134	135	136	137	138	139	140
5 (2)	**Works under Not less than 80 % component (Rule 5 (2))**														
5(2)(a)	**Assisted Natural Regeneration**														
i	PPO Works	Ha	1321.000	2232.00	3.45									0.00	0.00
ii	FYO Works	Ha	820.000	572.00	0.88									0.00	0.00
	Total of 5(2)(a)		2141.000	2804.00	4.33	0.00	0.00	0.00	0.00	0.00	0.00	0.00	0.00	0.00	0.00
5(2)(b)	**Artificial Regeneration**														
i	Artificial Regeneration (PPO) (Mission Melghat)	Ha.	75.000	82.50	0.13										
ii	Artificial Regeneration 4th YO Works	Ha	8531.930	1537.00	2.37									0.00	0.00
iii	Plantation along river banks (as per ICFRE DPR) (National Authority Scheme)	LS	0	300.00	0.46									0.00	0.00
iv	Afforestation in scrub and barren land (National Authority Scheme) LIDAR	Ha	350.000	663.00	1.02									0.00	0.00
v	Gramvan Plantation (Maintenance)	Ha	61.000	11.00	0.02									0.00	0.00
	Total for Artificial Regeneration		9017.930	2593.50	4.00	0.00	0.00	0.00	0.00	0.00	0.00	0.00	0.00	0.00	0.00
5(2)(c)	**Silvicultural operations in forests**														
i	Fodder Development (PPO Works)	Ha	1466.360	3343.00	5.16									0.00	0.00
ii	Fodder Development (PPO Works) (Mission Melghat)	Ha	200.000	200.00	0.31									0.00	0.00
iii	Fodder Development (FYO Works)	Ha	1874.000	2023.00	3.12									0.00	0.00
iv	Fodder Development (SYO Works)	Ha	2703.000	1975.00	3.05									0.00	0.00
v	Cutback Operations	Ha	90.000	8.00	0.01									0.00	0.00
	Total for Silvicultural operations in forests		6333.360	7549.00	11.65	0.00	0.00	0.00	0.00	0.00	0.00	0.00	0.00	0.00	0.00

Rule No.	Particulars of work	Proposed for APO 2022-23			%	Wildlife circle									
						WL Nagpur									
						PTR		BTR		TATR		NNTR		Total	
		Unit in	Phy	Fin		Phy	Fin	Phy	Fin	Phy	Fin	Phy	Fin	Phy	Fin
1	2	3	4	5	6	131	132	133	134	135	136	137	138	139	140
	Forest Protection														
5(2)(d)	**Protection of plantations and forests**														
i	Encroachment removal & Forest Protection	**Rmt**	**33054**	**1041.00**	**1.61**	60.00	6.00	40.00	40.00					**100.00**	**46.00**
ii	Survey, Demarcation & Fencing of Sensitive forest areas	**Rmt**	**70874**	**2834.00**	**4.38**		25.00	79.63	100.00					**79.63**	**125.00**
iii	Boundary Pillar Class I	**No.**	**18427**	**1475.00**	**2.28**									**0.00**	**0.00**
iv	Boundary Pillar Class I I	**No.**	**10304**	**413.00**	**0.64**									**0.00**	**0.00**
v	Construction, upgradation and maintenance of :														
(a)	Protection camps/Protection Huts	**No.**	**79**	**1580.00**	**2.44**	2.00	40.00			2.00	40.00	2.00	40.00	**6.00**	**120.00**
(b)	Forest Custody	**No.**	**6**	**138.00**	**0.21**									**0.00**	**0.00**
(c)	Labour Shed	**No.**	**48**	**316.00**	**0.49**									**0.00**	**0.00**
vi	Construction, upgradation and maintenance of Protection camps/Protection Huts/Forest Custody/Labour Shed (Mission Melghat)	**No.**		**340.00**	**0.52**										
vii	Establishment and maintenance of wireless networks	**No.**	**59**	**116.00**	**0.18**	3.00	15.00	18.00	5.00			4.00	15.00	**25.00**	**35.00**
viii	Establishment and maintenance of wireless networks (Mission Melghat)	**No.**	**24**	**60.00**	**0.09**									**0.00**	**0.00**
ix	Improving mobility of frontline staff for forest protection & patrolling.	**LS**	**0**	**148.00**	**0.23**		2.00		2.00		2.00		2.00	**0.00**	**8.00**
	Total for Protection of plantations and forests		**132875**	**8461.00**	**13.06**	**65.00**	**88.00**	**137.63**	**147.00**	**2.00**	**42.00**	**6.00**	**57.00**	**210.63**	**334.00**
5(2)(e)	**Pest and disease control in forest**	**Ha.**	**63**	**2.00**	**0.00**									**0.00**	**0.00**
5(2)(f)	**Forest fire prevention and control operations**														
i	Cutting and burning of fire lines	**Km**	**26362**	**766.00**	**1.18**	297.00	24.00	529.29	36.00			221.00	15.00	**1047.29**	**75.00**
ii	Fire watchers	**No.**	**28431**	**750.00**	**1.16**	70.00	11.00	5112.50	22.00			3965.00	18.00	**9147.50**	**51.00**
	Total for Forest fire prevention and control operations		**54793**	**1516.00**	**2.34**	**367.00**	**35.00**	**5641.79**	**58.00**	**0.00**	**0.00**	**4186.00**	**33.00**	**10194.79**	**126.00**
	Total for Forest Protection		**187731**	**9979.00**	**15.41**	**432.00**	**123.00**	**5779.42**	**205.00**	**2.00**	**42.00**	**4192.00**	**90.00**	**10405.42**	**460.00**

Rule No.	Particulars of work	Proposed for APO 2022-23			%	Wildlife circle									
						WL Nagpur									
						PTR		BTR		TATR		NNTR		Total	
		Unit in	Phy	Fin		Phy	Fin	Phy	Fin	Phy	Fin	Phy	Fin	Phy	Fin
1	2	3	4	5	6	131	132	133	134	135	136	137	138	139	140
5(2)(g)	**Soil and moisture conservation works in the forest**														
i	Construction of Gabiyan Bandhara	**No.**	**1141**	**588.00**	**0.91**			6.00	3.00	50.00	25.00			**56.00**	**28.00**
ii	Construction of Gabiyan Bandhara (Mission Melghat)	**No.**	**654**	**261.50**	**0.40**									**0.00**	**0.00**
iii	Construction of Cement Bandhare	**No.**	**158**	**2370.00**	**3.66**					5.00	75.00			**5.00**	**75.00**
iv	Construction of Cement Bandhare (Mission Melghat)	**No.**	**80**	**800.00**	**1.24**									**0.00**	**0.00**
v	Construction of check dams	**No.**	**81**	**52.00**	**0.08**					1.00	16.00			**1.00**	**16.00**
vi	Creation of Forest ponds/Vantale/Khodtadi	**No.**	**379**	**1137.00**	**1.76**									**0.00**	**0.00**
vii	Deep CCT	**Ha/Rmt**	**1253 / 3345**	**769.00**	**1.19**									**0.00**	**0.00**
viii	Earthen/Mati Nala Bunds	**No.**	**247**	**747.00**	**1.15**	21.00	63.00							**21.00**	**63.00**
ix	Construction of LBS Structure (Mission Melghat)	**No.**	**500**	**90.00**	**0.14**									**0.00**	**0.00**
x	**Soil and Water Conservation / Harvesting works (National Authority Scheme) LIDAR (As per santioned DPR)**	**LS**	**0**	**1000.00**	**1.54**									**0.00**	**0.00**
	Total for SMC works		**3240**	**7814.50**	**12.06**	**21.00**	**63.00**	**6.00**	**3.00**	**56.00**	**116.00**	**0.00**	**0.00**	**83.00**	**182.00**
	Wildlife Management & Man-animal conflict mitigation														
5(2)(h)	**Voluntary relocation of villages from Protected areas (including cost of land and other property of the field owners)**	**No.**	**48**	**10000.00**	**15.44**									**0.00**	**0.00**
5(2)(i)	**Improvement of wildlife habitat as provided in the approved wildlife management plan or working plan**														
i	All wildlife Management works will be carried out as per approved Management plan	**No.**	**15**	**4000.00**	**6.18**									**0.00**	**0.00**
ii	Medow development	**Ha.**	**2809.370**	**784.00**	**1.21**	50.00	25.00	102.37	30.00	816.00	446.00	150.00	61.00	**1118.37**	**562.00**
iii	Creation & maintenance of water sources/water holes for wildlife	**No.**	**1142**	**764.00**	**1.18**	50.00	15.00	8.00	2.00					**58.00**	**17.00**
iv	Creation & maintenance of water sources/water holes for wildlife (Mission Melghat)	**No.**		**120.00**	**0.19**									**0.00**	**0.00**
v	Eradication of invasive species	**Ha.**	**8302.300**	**884.00**	**1.36**	350.00	87.00	510.00	77.00	2202.30	171.00	100.00	10.00	**3162.30**	**345.00**
vi	Eradication of invasive species (Mission Melghat)	**Ha.**	**1600.000**	**272.00**	**0.42**									**0.00**	**0.00**
	Total for Improvement of wildlife habitat		**13869**	**6824.00**	**10.53**	**450.00**	**127.00**	**620.37**	**109.00**	**3018.30**	**617.00**	**250.00**	**71.00**	**4338.67**	**924.00**

Rule No.	Particulars of work	Proposed for APO 2022-23			%	Wildlife circle									
						WL Nagpur									
						PTR		BTR		TATR		NNTR		Total	
		Unit in	Phy	Fin		Phy	Fin	Phy	Fin	Phy	Fin	Phy	Fin	Phy	Fin
1	2	3	4	5	6	131	132	133	134	135	136	137	138	139	140
5(2)(j)	Planting and rejuvenation of forest cover on non-forest land falling in wildlife corridors	LS	0	3.00	0.00								3.00	0.00	3.00
5(2)(k)	**Establishment, operation and maintenance of animal rescue centre and veterinary treatment facilities for wild animals**														
i	Establishment, operation and maintenance of animal rescue centre/ Transit treatment Centre (Imcluding Provision for Gorewada)	No./LS	13	1377.00	2.13									0.00	0.00
ii	Veterinary treatment facilities for wild animals (Imcluding Provision for Gorewada)	No./LS	4	304.00	0.47						16.00			0.00	16.00
iii	Animal seizing & capturing devices	No./LS	189	406.00	0.63						10.00		3.00	0.00	13.00
iv	Rescue emergency operations	No./LS	6	426.00	0.66		5.00							0.00	5.00
v	Strengthening of Rapid rescue teams	No./LS	6	197.00	0.30	2.00	20.00	1.00	5.00	1.00	3.00			4.00	28.00
vi	Management of rewilding of tiger cubs	LS	0	40.00	0.06									0.00	0.00
	Total		218	2750.00	4.25	2.00	25.00	1.00	5.00	1.00	29.00	0.00	3.00	4.00	62.00
5(2)(l)	Supply of wood-saving cooking appliances and other forest produce saving devices in forest fringe villages as specified by the National Authority from time to time	No.	7250	135.00	0.21			6250.00	50.00					6250.00	50.00
	Total for Wildlife Management & Man-animal conflict mitigation		21385	19712.00	30.43	452.00	152.00	6871.37	164.00	3019.30	646.00	250.00	77.00	10592.67	1039.00
5(2)(m)	**Management of biological diversity and biological resource**														
i	New research projects and Maintenance of Ongoing Project by research wing of Maharashtra Forest Department	No.	11	357.00	0.55									0.00	0.00
ii	Base studies for forestry and wildlife related subjects	No.	4	158.00	0.24									0.00	0.00
iii	Conservation of Wildlife like GIB, Wild buffalo, Turtle, Vultures, Owl, Sparrow, etc.	No.	5	877.00	1.35									0.00	0.00
	Total		20	1392.00	2.15	0.00	0.00	0.00	0.00	0.00	0.00	0.00	0.00	0.00	0.00
	Grand Total for Activities under not less than 80% component		229868	51844.00	80.04	905.00	338.00	12656.79	372.00	3077.30	804.00	4442.00	167.00	21081.09	1681.00

Rule No.	Particulars of work	Proposed for APO 2022-23			%	Wildlife circle									
						WL Nagpur									
						PTR		BTR		TATR		NNTR		Total	
		Unit in	Phy	Fin		Phy	Fin	Phy	Fin	Phy	Fin	Phy	Fin	Phy	Fin
1	2	3	4	5	6	131	132	133	134	135	136	137	138	139	140
5 (3)	**Works under not more than 20 % component (Rule 5 (3))**														
5(3)(a)(i)	**Establishment, up-gradation and maintenance of modern nurseries and other planting stock production facilities for production of quality planting materials**	No.	10	150.00	0.23									0.00	0.00
5(3)(a)(ii)	**Establishment, up-gradation and maintenance of modern nurseries and other planting stock production facilities for production of quality planting materials (Mission Melghat)**	No.		90.00	0.14									0.00	0.00
	Total of 5(3)(a)		10	240.00	0.37	0.00	0.00	0.00	0.00	0.00	0.00	0.00	0.00	0.00	0.00
5(3)(b)	**Promoting conservation, sustainable use and documentation of biological diversity including preservation of habitats, conservation of land and folk varieties and cultivars, domesticated stocks and breeds of animals and microorganisms and chronicling of knowledge relating to biological diversity**														
i	Documentation and Publications of study materials for FTIs	LS	0	60.00	0.09									0.00	0.00
ii	Conducting Workshops/Trainings/Seminars/ Conferences for promoting conservation & sustainable use of biological diversity and capacity building of the frontline staff & officers.	No.	48	165.00	0.25									0.00	0.00
iii	Capacity building and gender sensitization of Forest Staff's through FTI /TERI/Forest academies/other institutions/CFRMC/JFMC /PRI	No.	476	2000.00	3.09									0.00	0.00
iv	Improving training inputs through guest faculties in Forest Training Institutes / Forest Academies	LS	0	20.00	0.03									0.00	0.00
	Total		524	2245.00	3.47	0.00	0.00	0.00	0.00	0.00	0.00	0.00	0.00	0.00	0.00
5(3)(c)	Purchase and maintenance of equipment or devices used for communication and information technology for the purpose of protection of forest and wildlife/AMC		0	950.00	1.47									0.00	0.00
5(3)(d)	**Construction, up-gradation and maintenance of :**														
i	Inspection paths/Forest roads in forest area,	Km/No	1121	296.00	0.46			245.70	47.00			50.50	14.00	296.20	61.00
ii	flush causway	No.	101	380.00	0.59	20.00	60.00	14.00	40.00					34.00	100.00
iii	watch towers,	No.	30	300.00	0.46									0.00	0.00
iv	Check posts/Check Naka	No.	11	99.00	0.15									0.00	0.00
v	**Construction, up-gradation and maintenance of Inspection paths/Forest roads in forest area/flush causway/watch towers /Check posts/Check Naka (Mission Melghat)**	No.		210.00	0.32									0.00	0.00
	Total of 5(3)(d)		1263	1285.00	1.98	20.00	60.00	259.70	87.00	0.00	0.00	50.50	14.00	330.20	161.00

Rule No.	Particulars of work	Proposed for APO 2022-23			%	Wildlife circle									
						WL Nagpur									
						PTR		BTR		TATR		NNTR		Total	
		Unit in	Phy	Fin		Phy	Fin	Phy	Fin	Phy	Fin	Phy	Fin	Phy	Fin
1	2	3	4	5	6	131	132	133	134	135	136	137	138	139	140
5(3)(e)	**Construction of residential and official buildings in forests for front line staffs deployed for protection of forest and wildlife**														
i	Construction of Type I Quarters	**No.**	**91**	**2002.00**	**3.09**	2.00	44.00	2.00	44.00	1.00	22.00	2.00	44.00	**7.00**	**154.00**
ii	Construction of Type-1 (G+2) 4 Units Residental Building for Special Tiger Protection Force (STPF)	**No.**	**3**	**541.00**	**0.84**	3.00	541.00							**3.00**	**541.00**
iii	Construction of Type II Quarters	**No.**	**48**	**1248.00**	**1.93**	1.00	26.00	1.00	26.00			1.00	26.00	**3.00**	**78.00**
iv	Construction of Type III Quarters	**No.**	**36**	**1296.00**	**2.00**	1.00	36.00	1.00	36.00					**2.00**	**72.00**
v	Construction of Range office	**No.**	**38**	**1709.00**	**2.64**	1.00	45.00							**1.00**	**45.00**
vi	Amenities for Woman Front line staff	**No.**	**19**	**266.00**	**0.41**			1.00	14.00					**1.00**	**14.00**
	Total New Constructions		**235**	**7062.00**	**10.90**	**8.00**	**692.00**	**5.00**	**120.00**	**1.00**	**22.00**	**3.00**	**70.00**	**17.00**	**904.00**
5(3)(f)(i)	Casual engagement of local people or labours to assist regular staff of State Forest Department for works for protection of forest and wildlife undertaken from State Fund	**No.**	**0**	**80.00**	**0.12**									**0.00**	**0.00**
5(3)(f)(ii)	Casual engagement of local people or labours to assist regular staff of State Forest Department for works for protection of forest and wildlife undertaken from State Fund (Mission Melghat)	**No.**	**0**	**225.00**	**0.35**									**0.00**	**0.00**
5(3)(g)	Survey and mapping of forest areas for forest fire control, compensatory afforestation works, soil and moisture conservation, catchment area treatment and wildlife management for preparing annual plans to be executed from the State Fund	**LS**	**0**	**100.00**	**0.15**									**0.00**	**0.00**
5(3)(h)	Independent concurrent monitoring and evaluation and third party monitoring of various works undertaken from State Fund	**LS**	**0**	**202.00**	**0.31**									**0.00**	**0.00**
5(3)(i)	Publicity-cum-awareness programme and exhibition on the various schemes being implemented by the State Authority from State Fund (including Nature Awareness Program conduct by METDB)	**LS**	**0**	**343.00**	**0.53**		2.00		2.00		2.00		2.00	**0.00**	**8.00**
5(3)(j)	Production and distribution of quality planting material through certified nurseries at subsidized price for promotion of trees outside forests on Government lands promoted by State Government {Saplings for planned afforestation activities in the area under control / management of the Central Armed Police Forces (CAPFs) (As per National Authority Instructions)}	**LS**	**0**	**200.00**	**0.31**									**0.00**	**0.00**
5(3)(k)	forest certification and development of certification standards	**LS**	**0**	**0.00**	**0.00**									**0.00**	**0.00**
	Total for works under not more than 20% component		**2032.33**	**12932.00**	**19.96**	**28.00**	**754.00**	**264.70**	**209.00**	**1.00**	**24.00**	**53.50**	**86.00**	**347.20**	**1073.00**
	Grand Total for NPV			**64776.00**	**100.00**		**1092.00**		**581.00**		**828.00**		**253.00**		**2754.00**

ANNUAL PLAN OF OPERATIONS 2022-23						COMPONENT WISE ALLOTMENT FOR NPV WORKS													
Annexure-VII-A																		(Amount in Rs. Lakhs)	
Rule No.	Particulars of work	Proposed for APO 2022-23			%	Wildlife circle													
						WL Amravti													
						Melghat		Sipna		Gugamal		Akot		Akola		Pandharkawada		Total	
		Unit in	Phy	Fin		Phy	Fin	Phy	Fin	Phy	Fin	Phy	Fin	Phy	Fin	Phy	Fin	Phy	Fin
1	2	3	4	5	6	141	142	143	144	145	146	147	148	149	150	151	152	153	154
5 (2)	**Works under Not less than 80 % component (Rule 5 (2))**																		
5(2)(a)	**Assisted Natural Regeneration**																		
i	PPO Works	Ha	1321.000	2232.00	3.45													0	0.00
ii	FYO Works	Ha	820.000	572.00	0.88													0	0.00
	Total of 5(2)(a)		2141.000	2804.00	4.33	0	0.00	0	0.00	0	0.00	0	0.00	0	0.00	0	0.00	0	0.00
5(2)(b)	**Artificial Regeneration**																		
i	Artificial Regeneration (PPO) (Mission Melghat)	Ha.	75.000	82.50	0.13														
ii	Artificial Regeneration 4th YO Works	Ha	8531.930	1537.00	2.37	15.00	3.00											15	3.00
iii	Plantation along river banks (as per ICFRE DPR) (National Authority Scheme)	LS	0	300.00	0.46													0	0.00
iv	Afforestation in scrub and barren land (National Authority Scheme) LIDAR	Ha	350.000	663.00	1.02													0	0.00
v	Gramvan Plantation (Maintenance)	Ha	61.000	11.00	0.02													0	0.00
	Total for Artificial Regeneration		9017.930	2593.50	4.00	15	3.00	0	0.00	0	0.00	0	0.00	0	0.00	0	0.00	15	3.00
5(2)(c)	**Silvicultural operations in forests**																		
i	Fodder Development (PPO Works)	Ha	1466.360	3343.00	5.16													0	0.00
ii	Fodder Development (PPO Works) (Mission Melghat)	Ha	200.000	200.00	0.31													0	0.00
iii	Fodder Development (FYO Works)	Ha	1874.000	2023.00	3.12													0	0.00
iv	Fodder Development (SYO Works)	Ha	2703.000	1975.00	3.05													0	0.00
v	Cutback Operations	Ha	90.000	8.00	0.01													0	0.00
	Total for Silvicultural operations in forests		6333.360	7549.00	11.65	0	0.00	0	0.00	0	0.00	0	0.00	0	0.00	0	0.00	0	0.00

Rule No.	Particulars of work	Proposed for APO 2022-23			%	Wildlife circle													
						WL Amravti													
						Melghat		Sipna		Gugamal		Akot		Akola		Pandharkawada		Total	
		Unit in	Phy	Fin		Phy	Fin	Phy	Fin	Phy	Fin	Phy	Fin	Phy	Fin	Phy	Fin	Phy	Fin
1	2	3	4	5	6	141	142	143	144	145	146	147	148	149	150	151	152	153	154
	Forest Protection																		
5(2)(d)	**Protection of plantations and forests**																		
i	Encroachment removal & Forest Protection	**Rmt**	**33054**	**1041.00**	**1.61**													**0**	**0.00**
ii	Survey, Demarcation & Fencing of Sensitive forest areas	**Rmt**	**70874**	**2834.00**	**4.38**													**0**	**0.00**
iii	Boundary Pillar Class I	**No.**	**18427**	**1475.00**	**2.28**													**0**	**0.00**
iv	Boundary Pillar Class I I	**No.**	**10304**	**413.00**	**0.64**													**0**	**0.00**
v	Construction, upgradation and maintenance of :																		
(a)	Protection camps/Protection Huts	**No.**	**79**	**1580.00**	**2.44**			5	100.00	2	40.00	1	20.00			5	100.00	**13**	**260.00**
(b)	Forest Custody	**No.**	**6**	**138.00**	**0.21**													**0**	**0.00**
(c)	Labour Shed	**No.**	**48**	**316.00**	**0.49**													**0**	**0.00**
vi	Construction, upgradation and maintenance of Protection camps/Protection Huts/Forest Custody/Labour Shed (Mission Melghat)	**No.**		**340.00**	**0.52**		70.00		120.00		90.00		60.00					**0**	**340.00**
vii	Establishment and maintenance of wireless networks	**No.**	**59**	**116.00**	**0.18**			2	3.00					3	5.00			**5**	**8.00**
viii	Establishment and maintenance of wireless networks (Mission Melghat)	**No.**	**24**	**60.00**	**0.09**	5	12.50	5	12.50	5	12.50	5	12.50					**20**	**50.00**
ix	Improving mobility of frontline staff for forest protection & patrolling.	**LS**	**0**	**148.00**	**0.23**		2.00		2.00		2.00		2.00		2.00		2.00	**0**	**12.00**
	Total for Protection of plantations and forests		**132875**	**8461.00**	**13.06**	**5**	**84.50**	**12**	**237.50**	**7**	**144.50**	**6**	**94.50**	**3**	**7.00**	**5**	**102.00**	**38**	**670.00**
5(2)(e)	**Pest and disease control in forest**	**Ha.**	**63**	**2.00**	**0.00**													**0**	**0.00**
5(2)(f)	**Forest fire prevention and control operations**																		
i	Cutting and burning of fire lines	**Km**	**26362**	**766.00**	**1.18**			2017	45.00	1370	30.00	1515	32.00	393	8.00			**5295**	**115.00**
ii	Fire watchers	**No.**	**28431**	**750.00**	**1.16**			4240	18.00					1365	5.00			**5605**	**23.00**
	Total for Forest fire prevention and control operations		**54793**	**1516.00**	**2.34**	**0**	**0.00**	**6257**	**63.00**	**1370**	**30.00**	**1515**	**32.00**	**1758**	**13.00**	**0**	**0.00**	**10900**	**138.00**
	Total for Forest Protection		**187731**	**9979.00**	**15.41**	**5**	**84.50**	**6269**	**300.50**	**1377**	**174.50**	**1521**	**126.50**	**1761**	**20.00**	**5**	**102.00**	**10938**	**808.00**

Rule No.	Particulars of work	Proposed for APO 2022-23			%	Wildlife circle													
						WL Amravti													
						Melghat		Sipna		Gugamal		Akot		Akola		Pandharkawada		Total	
		Unit in	Phy	Fin		Phy	Fin	Phy	Fin	Phy	Fin	Phy	Fin	Phy	Fin	Phy	Fin	Phy	Fin
1	2	3	4	5	6	141	142	143	144	145	146	147	148	149	150	151	152	153	154
5(2)(g)	**Soil and moisture conservation works in the forest**																		
i	Construction of Gabiyan Bandhara	No.	1141	588.00	0.91					40	20.00			30	15.00	30	15.00	100	50.00
ii	Construction of Gabiyan Bandhara (Mission Melghat)	No.	654	261.50	0.40	100	40.00	145	58.00	100	40.00	100	40.00					445	178.00
iii	Construction of Cement Bandhare	No.	158	2370.00	3.66			14	210.00							7	105.00	21	315.00
iv	Construction of Cement Bandhare (Mission Melghat)	No.	80	800.00	1.24	15	150.00	15	150.00	15	150.00	15	150.00					60	600.00
v	Construction of check dams	No.	81	52.00	0.08													0	0.00
vi	Creation of Forest ponds/Vantale/Khodtadi	No.	379	1137.00	1.76									9	27.00	18	54.00	27	81.00
vii	Deep CCT	Ha/Rmt	1253 / 3345	769.00	1.19													0	0.00
viii	Earthen/Mati Nala Bunds	No.	247	747.00	1.15									2	6.00	7	21.00	9	27.00
ix	Construction of LBS Structure (Mission Melghat)	No.	500	90.00	0.14	100	18.00			100	18.00	100	18.00					300	54.00
x	**Soil and Water Conservation / Harvesting works (National Authority Scheme) LIDAR (As per santioned DPR)**	LS	0	1000.00	1.54													0	0.00
	Total for SMC works		3240	7814.50	12.06	215	208.00	174	418.00	255	228.00	215	208.00	41	48.00	62	195.00	962	1305.00
	Wildlife Management & Man-animal conflict mitigation																		
5(2)(h)	**Voluntary relocation of villages from Protected areas (including cost of land and other property of the field owners)**	No.	48	10000.00	15.44													0	0.00
5(2)(i)	**Improvement of wildlife habitat as provided in the approved wildlife management plan or working plan**																		
i	All wildlife Management works will be carried out as per approved Management plan	No.	15	4000.00	6.18													0	0.00
ii	Medow development	Ha.	2809.370	784.00	1.21	55	3.00	129	37.00	215	50.00	4	39.00	50	20.00	445	24.00	898	173.00
iii	Creation & maintenance of water sources/water holes for wildlife	No.	1142	764.00	1.18	60	21.00	442	71.00			20	19.00	60	4.00			582	115.00
iv	Creation & maintenance of water sources/water holes for wildlife (Mission Melghat)	No.		120.00	0.19		20.00		20.00		20.00		20.00					0	80.00
v	Eradication of invasive species	Ha.	8302.300	884.00	1.36			1477	119.00	215	50.00			400	33.00	820	76.00	2912	278.00
vi	Eradication of invasive species (Mission Melghat)	Ha.	1600.000	272.00	0.42	400	68.00	400	68.00	400	68.00	400	68.00					1600	272.00
	Total for Improvement of wildlife habitat		13869	6824.00	10.53	515.00	112.00	2448.00	315.00	830.00	188.00	424.00	146.00	510.00	57.00	1265.00	100.00	5992.00	918.00

Rule No.	Particulars of work	Proposed for APO 2022-23			%	Wildlife circle													
						WL Amravti													
						Melghat		Sipna		Gugamal		Akot		Akola		Pandharkawada		Total	
		Unit in	Phy	Fin		Phy	Fin	Phy	Fin	Phy	Fin	Phy	Fin	Phy	Fin	Phy	Fin	Phy	Fin
1	2	3	4	5	6	141	142	143	144	145	146	147	148	149	150	151	152	153	154
5(2)(j)	Planting and rejuvenation of forest cover on non-forest land falling in wildlife corridors	LS	0	3.00	0.00													0	0.00
5(2)(k)	**Establishment, operation and maintenance of animal rescue centre and veterinary treatment facilities for wild animals**																		
i	Establishment, operation and maintenance of animal rescue centre/ Transit treatment Centre (Imcluding Provision for Gorewada)	No./LS	13	1377.00	2.13													0	0.00
ii	Veterinary treatment facilities for wild animals (Imcluding Provision for Gorewada)	No./LS	4	304.00	0.47				2.00									0	2.00
iii	Animal seizing & capturing devices	No./LS	189	406.00	0.63				2.00					5	7.00			5	9.00
iv	Rescue emergency operations	No./LS	6	426.00	0.66													0	0.00
v	Strengthening of Rapid rescue teams	No./LS	6	197.00	0.30													0	0.00
vi	Management of rewilding of tiger cubs	LS	0	40.00	0.06													0	0.00
	Total		218	2750.00	4.25	0	0.00	0	4.00	0	0.00	0	0.00	5	7.00	0	0.00	5	11.00
5(2)(l)	Supply of wood-saving cooking appliances and other forest produce saving devices in forest fringe villages as specified by the National Authority from time to time	No.	7250	135.00	0.21													0	0.00
	Total for Wildlife Management & Man-animal conflict mitigation		21385	19712.00	30.43	515	112.00	2448	319.00	830	188.00	424	146.00	515	64.00	1265	100.00	5997	929.00
5(2)(m)	**Management of biological diversity and biological resource**																		
i	New research projects and Maintenance of Ongoing Project by research wing of Maharashtra Forest Department	No.	11	357.00	0.55													0	0.00
ii	Base studies for forestry and wildlife related subjects	No.	4	158.00	0.24													0	0.00
iii	Conservation of Wildlife like GIB, Wild buffalo, Turtle, Vultures, Owl, Sparrow, etc.	No.	5	877.00	1.35													0	0.00
	Total		20	1392.00	2.15	0	0.00	0	0.00	0	0.00	0	0.00	0	0.00	0	0.00	0	0.00
	Grand Total for Activities under not less than 80% component		229868	51844.00	80.04	750	407.50	8891	1037.50	2462	590.50	2160	480.50	2317	132.00	1332	397.00	17912	3045.00

Rule No.	Particulars of work	Proposed for APO 2022-23			%	Wildlife circle													
						WL Amravti													
						Melghat		Sipna		Gugamal		Akot		Akola		Pandharkawada		Total	
		Unit in	Phy	Fin		Phy	Fin	Phy	Fin	Phy	Fin	Phy	Fin	Phy	Fin	Phy	Fin	Phy	Fin
1	2	3	4	5	6	141	142	143	144	145	146	147	148	149	150	151	152	153	154
5 (3)	**Works under not more than 20 % component (Rule 5 (3))**																		
5(3)(a)(i)	**Establishment, up-gradation and maintenance of modern nurseries and other planting stock production facilities for production of quality planting materials**	**No.**	**10**	**150.00**	**0.23**													**0**	**0.00**
5(3)(a)(ii)	**Establishment, up-gradation and maintenance of modern nurseries and other planting stock production facilities for production of quality planting materials (Mission Melghat)**	**No.**		**90.00**	**0.14**													**0**	**0.00**
	Total of 5(3)(a)		**10**	**240.00**	**0.37**	**0.00**	**0.00**	**0.00**	**0.00**	**0.00**	**0.00**	**0.00**	**0.00**	**0.00**	**0.00**	**0.00**	**0.00**	**0.00**	**0.00**
5(3)(b)	**Promoting conservation, sustainable use and documentation of biological diversity including preservation of habitats, conservation of land and folk varieties and cultivars, domesticated stocks and breeds of animals and microorganisms and chronicling of knowledge relating to biological diversity**																		
i	Documentation and Publications of study materials for FTIs	**LS**	**0**	**60.00**	**0.09**													**0**	**0.00**
ii	Conducting Workshops/Trainings/Seminars/ Conferences for promoting conservation & sustainable use of biological diversity and capacity building of the frontline staff & officers.	**No.**	**48**	**165.00**	**0.25**													**0**	**0.00**
iii	Capacity building and gender sensitization of Forest Staff's through FTI /TERI/Forest academies/other institutions/CFRMC/JFMC /PRI	**No.**	**476**	**2000.00**	**3.09**													**0**	**0.00**
iv	Improving training inputs through guest faculties in Forest Training Institutes / Forest Academies	**LS**	**0**	**20.00**	**0.03**													**0**	**0.00**
	Total		**524**	**2245.00**	**3.47**	**0**	**0.00**	**0**	**0.00**	**0**	**0.00**	**0**	**0.00**	**0**	**0.00**	**0**	**0.00**	**0**	**0.00**
5(3)(c)	Purchase and maintenance of equipment or devices used for communication and information technology for the purpose of protection of forest and wildlife/AMC		**0**	**950.00**	**1.47**													**0**	**0.00**
5(3)(d)	**Construction, up-gradation and maintenance of :**																		
i	Inspection paths/Forest roads in forest area,	**Km/No**	**1121**	**296.00**	**0.46**	79	16.00	214	34.00	287	63.00			75	12.00			**654**	**125.00**
ii	flush causway	**No.**	**101**	**380.00**	**0.59**			51	100.00									**51**	**100.00**
iii	watch towers,	**No.**	**30**	**300.00**	**0.46**											1	10.00	**1**	**10.00**
iv	Check posts/Check Naka	**No.**	**11**	**99.00**	**0.15**													**0**	**0.00**
v	**Construction, up-gradation and maintenance of Inspection paths/Forest roads in forest area/flush causway/watch towers /Check posts/Check Naka (Mission Melghat)**	**No.**		**210.00**	**0.32**		20.00		40.00		50.00		50.00					**0**	**160.00**
	Total of 5(3)(d)		**1263**	**1285.00**	**1.98**	**78.50**	**36.00**	**264.61**	**174.00**	**287.02**	**113.00**	**0.00**	**50.00**	**75.00**	**12.00**	**1.00**	**10.00**	**706.13**	**395.00**

Rule No.	Particulars of work	Proposed for APO 2022-23			%	Wildlife circle													
						WL Amravti													
						Melghat		Sipna		Gugamal		Akot		Akola		Pandharkawada		Total	
		Unit in	Phy	Fin		Phy	Fin	Phy	Fin	Phy	Fin	Phy	Fin	Phy	Fin	Phy	Fin	Phy	Fin
1	2	3	4	5	6	141	142	143	144	145	146	147	148	149	150	151	152	153	154
5(3)(e)	**Construction of residential and official buildings in forests for front line staffs deployed for protection of forest and wildlife**																		
i	Construction of Type I Quarters	**No.**	**91**	**2002.00**	**3.09**			2	44.00	2	44.00	2	44.00			2	44.00	**8**	**176.00**
ii	Construction of Type-1 (G+2) 4 Units Residental Building for Special Tiger Protection Force (STPF)	**No.**	**3**	**541.00**	**0.84**													**0**	**0.00**
iii	Construction of Type II Quarters	**No.**	**48**	**1248.00**	**1.93**			1	26.00	1	26.00			1	26.00	1	26.00	**4**	**104.00**
iv	Construction of Type III Quarters	**No.**	**36**	**1296.00**	**2.00**			1	36.00			1	36.00			1	36.00	**3**	**108.00**
v	Construction of Range office	**No.**	**38**	**1709.00**	**2.64**			1	45.00							1	45.00	**2**	**90.00**
vi	Amenities for Woman Front line staff	**No.**	**19**	**266.00**	**0.41**													**0**	**0.00**
	Total New Constructions		**235**	**7062.00**	**10.90**	**0.00**	**0.00**	**5.00**	**151.00**	**3.00**	**70.00**	**3.00**	**80.00**	**1.00**	**26.00**	**5.00**	**151.00**	**17.00**	**478.00**
5(3)(f)(i)	Casual engagement of local people or labours to assist regular staff of State Forest Department for works for protection of forest and wildlife undertaken from State Fund	**No.**	**0**	**80.00**	**0.12**													**0**	**0.00**
5(3)(f)(ii)	Casual engagement of local people or labours to assist regular staff of State Forest Department for works for protection of forest and wildlife undertaken from State Fund (Mission Melghat)	**No.**	**0**	**225.00**	**0.35**		45.00		45.00		45.00		35.00					**0**	**170.00**
5(3)(g)	Survey and mapping of forest areas for forest fire control, compensatory afforestation works, soil and moisture conservation, catchment area treatment and wildlife management for preparing annual plans to be executed from the State Fund	**LS**	**0**	**100.00**	**0.15**													**0**	**0.00**
5(3)(h)	Independent concurrent monitoring and evaluation and third party monitoring of various works undertaken from State Fund	**LS**	**0**	**202.00**	**0.31**													**0**	**0.00**
5(3)(i)	Publicity-cum-awareness programme and exhibition on the various schemes being implemented by the State Authority from State Fund (including Nature Awareness Program conduct by METDB)	**LS**	**0**	**343.00**	**0.53**		2.00		2.00		2.00		2.00		2.00		2.00	**0**	**12.00**
5(3)(j)	Production and distribution of quality planting material through certified nurseries at subsidized price for promotion of trees outside forests on Government lands promoted by State Government {Saplings for planned afforestation activities in the area under control / management of the Central Armed Police Forces (CAPFs) (As per National Authority Instructions)}	**LS**	**0**	**200.00**	**0.31**													**0**	**0.00**
5(3)(k)	forest certification and development of certification standards	**LS**	**0**	**0.00**	**0.00**													**0**	**0.00**
	Total for works under not more than 20% component		**2032.33**	**12932.00**	**19.96**	**78.50**	**83.00**	**269.61**	**372.00**	**290.02**	**230.00**	**3.00**	**167.00**	**76.00**	**40.00**	**6.00**	**163.00**	**723.13**	**1055.00**
	Grand Total for NPV			**64776.00**	**100.00**		**490.50**		**1409.50**		**820.50**		**647.50**		**172.00**		**560.00**		**4100.00**

ANNUAL PLAN OF OPERATIONS 2022-23						COMPONENT WISE ALLOTMENT FOR NPV WORKS													
Annexure-VII-A						(Amount in Rs. Lakhs)													
Rule No.	Particulars of work	Proposed for APO 2022-23			%	Wildlife circle													
						WL Mumbai													
						SGNP		WL Thane		WL Pune		WL Kolhapur		WL Nashik		WL Aurangabad		Total	
		Unit in	Phy	Fin		Phy	Fin	Phy	Fin	Phy	Fin	Phy	Fin	Phy	Fin	Phy	Fin	Phy	Fin
1	2	3	4	5	6	155	156	157	158	159	160	161	162	163	164	165	166	167	168
5 (2)	**Works under Not less than 80 % component (Rule 5 (2))**																		
5(2)(a)	**Assisted Natural Regeneration**																		
i	PPO Works	Ha	1321.000	2232.00	3.45													0	0.00
ii	FYO Works	Ha	820.000	572.00	0.88													0	0.00
	Total of 5(2)(a)		2141.000	2804.00	4.33	0	0.00	0	0.00	0	0.00	0	0.00	0	0.00	0	0.00	0	0.00
5(2)(b)	**Artificial Regeneration**																		
i	Artificial Regeneration (PPO) (Mission Melghat)	Ha.	75.000	82.50	0.13														
ii	Artificial Regeneration 4th YO Works	Ha	8531.930	1537.00	2.37													0	0.00
iii	Plantation along river banks (as per ICFRE DPR) (National Authority Scheme)	LS	0	300.00	0.46													0	0.00
iv	Afforestation in scrub and barren land (National Authority Scheme) LIDAR	Ha	350.000	663.00	1.02													0	0.00
v	Gramvan Plantation (Maintenance)	Ha	61.000	11.00	0.02													0	0.00
	Total for Artificial Regeneration		9017.930	2593.50	4.00	0	0.00	0	0.00	0	0.00	0	0.00	0	0.00	0	0.00	0	0.00
5(2)(c)	**Silvicultural operations in forests**																		
i	Fodder Development (PPO Works)	Ha	1466.360	3343.00	5.16													0	0.00
ii	Fodder Development (PPO Works) (Mission Melghat)	Ha	200.000	200.00	0.31													0	0.00
iii	Fodder Development (FYO Works)	Ha	1874.000	2023.00	3.12													0	0.00
iv	Fodder Development (SYO Works)	Ha	2703.000	1975.00	3.05													0	0.00
v	Cutback Operations	Ha	90.000	8.00	0.01													0	0.00
	Total for Silvicultural operations in forests		6333.360	7549.00	11.65	0	0.00	0	0.00	0	0.00	0	0.00	0	0.00	0	0.00	0	0.00

Rule No.	Particulars of work	Proposed for APO 2022-23			%	Wildlife circle													
						WL Mumbai													
						SGNP		WL Thane		WL Pune		WL Kolhapur		WL Nashik		WL Aurangabad		Total	
		Unit in	Phy	Fin		Phy	Fin	Phy	Fin	Phy	Fin	Phy	Fin	Phy	Fin	Phy	Fin	Phy	Fin
1	2	3	4	5	6	155	156	157	158	159	160	161	162	163	164	165	166	167	168
	Forest Protection																		
5(2)(d)	**Protection of plantations and forests**																		
i	Encroachment removal & Forest Protection	**Rmt**	**33054**	**1041.00**	**1.61**	**1**	**10.00**		**5.00**									**1**	**15.00**
ii	Survey, Demarcation & Fencing of Sensitive forest areas	**Rmt**	**70874**	**2834.00**	**4.38**					**600**	**17.00**		**5.00**					**600**	**22.00**
iii	Boundary Pillar Class I	**No.**	**18427**	**1475.00**	**2.28**													**0**	**0.00**
iv	Boundary Pillar Class I I	**No.**	**10304**	**413.00**	**0.64**			**600**	**24.00**									**600**	**24.00**
v	Construction, upgradation and maintenance of :																		
(a)	Protection camps/Protection Huts	**No.**	**79**	**1580.00**	**2.44**	**4**	**80.00**	**4**	**80.00**	**2**	**40.00**			**3**	**60.00**			**13**	**260.00**
(b)	Forest Custody	**No.**	**6**	**138.00**	**0.21**													**0**	**0.00**
(c)	Labour Shed	**No.**	**48**	**316.00**	**0.49**					**2**	**12.00**							**2**	**12.00**
vi	Construction, upgradation and maintenance of Protection camps/Protection Huts/Forest Custody/Labour Shed (Mission Melghat)	**No.**		**340.00**	**0.52**														
vii	Establishment and maintenance of wireless networks	**No.**	**59**	**116.00**	**0.18**		**15.00**					**2**	**15.00**	**3**	**3.00**	**1**	**25.00**	**6**	**58.00**
viii	Establishment and maintenance of wireless networks (Mission Melghat)	**No.**	**24**	**60.00**	**0.09**													**0**	**0.00**
ix	Improving mobility of frontline staff for forest protection & patrolling.	**LS**	**0**	**148.00**	**0.23**		**2.00**		**2.00**		**2.00**		**2.00**		**2.00**		**2.00**	**0**	**12.00**
	Total for Protection of plantations and forests		**132875**	**8461.00**	**13.06**	**5**	**107.00**	**604**	**111.00**	**604**	**71.00**	**2**	**22.00**	**6**	**65.00**	**1**	**27.00**	**1222**	**403.00**
5(2)(e)	**Pest and disease control in forest**	**Ha.**	**63**	**2.00**	**0.00**													**0**	**0.00**
5(2)(f)	**Forest fire prevention and control operations**																		
i	Cutting and burning of fire lines	**Km**	**26362**	**766.00**	**1.18**		15.00	399	6.00									**399**	**21.00**
ii	Fire watchers	**No.**	**28431**	**750.00**	**1.16**		**15.00**	45	**31.00**			2280	**10.00**	60	**26.00**			**2385**	**82.00**
	Total for Forest fire prevention and control operations		**54793**	**1516.00**	**2.34**	**0**	**30.00**	**444**	**37.00**	**0**	**0.00**	**2280**	**10.00**	**60**	**26.00**	**0**	**0.00**	**2784**	**103.00**
	Total for Forest Protection		**187731**	**9979.00**	**15.41**	**5**	**137.00**	**1048**	**148.00**	**604**	**71.00**	**2282**	**32.00**	**66**	**91.00**	**1**	**27.00**	**4006**	**506.00**

Rule No.	Particulars of work	Proposed for APO 2022-23			%	Wildlife circle													
						WL Mumbai													
						SGNP		WL Thane		WL Pune		WL Kolhapur		WL Nashik		WL Aurangabad		Total	
		Unit in	Phy	Fin		Phy	Fin	Phy	Fin	Phy	Fin	Phy	Fin	Phy	Fin	Phy	Fin	Phy	Fin
1	2	3	4	5	6	155	156	157	158	159	160	161	162	163	164	165	166	167	168
5(2)(g)	**Soil and moisture conservation works in the forest**																		
i	Construction of Gabiyan Bandhara	No.	1141	588.00	0.91			50	25.00									50	25.00
ii	Construction of Gabiyan Bandhara (Mission Melghat)	No.	654	261.50	0.40													0	0.00
iii	Construction of Cement Bandhare	No.	158	2370.00	3.66					3	45.00			5	75.00			8	120.00
iv	Construction of Cement Bandhare (Mission Melghat)	No.	80	800.00	1.24													0	0.00
v	Construction of check dams	No.	81	52.00	0.08			10	4.50									10	4.50
vi	Creation of Forest ponds/Vantale/Khodtadi	No.	379	1137.00	1.76													0	0.00
vii	Deep CCT	Ha/Rmt	1253 / 3345	769.00	1.19													0	0.00
viii	Earthen/Mati Nala Bunds	No.	247	747.00	1.15													0	0.00
ix	Construction of LBS Structure (Mission Melghat)	No.	500	90.00	0.14													0	0.00
x	**Soil and Water Conservation / Harvesting works (National Authority Scheme) LIDAR (As per santioned DPR)**	LS	0	1000.00	1.54													0	0.00
	Total for SMC works		3240	7814.50	12.06	0	0.00	60	29.50	3	45.00	0	0.00	5	75.00	0	0.00	68	149.50
	Wildlife Management & Man-animal conflict mitigation																		
5(2)(h)	**Voluntary relocation of villages from Protected areas (including cost of land and other property of the field owners)**	No.	48	10000.00	15.44													0	0.00
5(2)(i)	**Improvement of wildlife habitat as provided in the approved wildlife management plan or working plan**																		
i	All wildlife Management works will be carried out as per approved Management plan	No.	15	4000.00	6.18													0	0.00
ii	Medow development	Ha.	2809.370	784.00	1.21							571	31.00	222	18.00			793	49.00
iii	Creation & maintenance of water sources/water holes for wildlife	No.	1142	764.00	1.18			20	20.00	33	29.00			13	20.00			66	69.00
iv	Creation & maintenance of water sources/water holes for wildlife (Mission Melghat)	No.		120.00	0.19													0	0.00
v	Eradication of invasive species	Ha.	8302.300	884.00	1.36							60	11.00	4	20.00			64	31.00
vi	Eradication of invasive species (Mission Melghat)	Ha.	1600.000	272.00	0.42													0	0.00
	Total for Improvement of wildlife habitat		13869	6824.00	10.53	0.00	0.00	20.00	20.00	33.00	29.00	631.00	42.00	239.00	58.00	0.00	0.00	923.00	149.00

Rule No.	Particulars of work	Proposed for APO 2022-23			%	Wildlife circle													
						WL Mumbai													
						SGNP		WL Thane		WL Pune		WL Kolhapur		WL Nashik		WL Aurangabad		Total	
		Unit in	Phy	Fin		Phy	Fin	Phy	Fin	Phy	Fin	Phy	Fin	Phy	Fin	Phy	Fin	Phy	Fin
1	2	3	4	5	6	155	156	157	158	159	160	161	162	163	164	165	166	167	168
5(2)(j)	Planting and rejuvenation of forest cover on non-forest land falling in wildlife corridors	LS	0	3.00	0.00													0	0.00
5(2)(k)	**Establishment, operation and maintenance of animal rescue centre and veterinary treatment facilities for wild animals**																		
i	Establishment, operation and maintenance of animal rescue centre/ Transit treatment Centre (Imcluding Provision for Gorewada)	No./LS	13	1377.00	2.13			1	1.00					1	1.00			2	2.00
ii	Veterinary treatment facilities for wild animals (Imcluding Provision for Gorewada)	No./LS	4	304.00	0.47													0	0.00
iii	Animal seizing & capturing devices	No./LS	189	406.00	0.63							25	6.00	7	8.00			32	14.00
iv	Rescue emergency operations	No./LS	6	426.00	0.66									1	5.00			1	5.00
v	Strengthening of Rapid rescue teams	No./LS	6	197.00	0.30													0	0.00
vi	Management of rewilding of tiger cubs	LS	0	40.00	0.06													0	0.00
	Total		218	2750.00	4.25	0	0.00	1	1.00	0	0.00	25	6.00	9	14.00	0	0.00	35	21.00
5(2)(l)	Supply of wood-saving cooking appliances and other forest produce saving devices in forest fringe villages as specified by the National Authority from time to time	No.	7250	135.00	0.21				10.00									0	10.00
	Total for Wildlife Management & Man-animal conflict mitigation		21385	19712.00	30.43	0	0.00	21	31.00	33	29.00	656	48.00	248	72.00	0	0.00	958	180.00
5(2)(m)	**Management of biological diversity and biological resource**																		
i	New research projects and Maintenance of Ongoing Project by research wing of Maharashtra Forest Department	No.	11	357.00	0.55													0	0.00
ii	Base studies for forestry and wildlife related subjects	No.	4	158.00	0.24													0	0.00
iii	Conservation of Wildlife like GIB, Wild buffalo, Turtle, Vultures, Owl, Sparrow, etc.	No.	5	877.00	1.35				8.00									0	8.00
	Total		20	1392.00	2.15	0	0.00	0	8.00	0	0.00	0	0.00	0	0.00	0	0.00	0	8.00
	Grand Total for Activities under not less than 80% component		229868	51844.00	80.04	5	137.00	1129	216.50	640	145.00	2938	80.00	319	238.00	1	27.00	5032	843.50

Rule No.	Particulars of work	Proposed for APO 2022-23			%	Wildlife circle													
						WL Mumbai													
						SGNP		WL Thane		WL Pune		WL Kolhapur		WL Nashik		WL Aurangabad		Total	
		Unit in	Phy	Fin		Phy	Fin	Phy	Fin	Phy	Fin	Phy	Fin	Phy	Fin	Phy	Fin	Phy	Fin
1	2	3	4	5	6	155	156	157	158	159	160	161	162	163	164	165	166	167	168
5 (3)	**Works under not more than 20 % component (Rule 5 (3))**																		
5(3)(a)(i)	**Establishment, up-gradation and maintenance of modern nurseries and other planting stock production facilities for production of quality planting materials**	No.	10	150.00	0.23													0	0.00
5(3)(a)(ii)	**Establishment, up-gradation and maintenance of modern nurseries and other planting stock production facilities for production of quality planting materials (Mission Melghat)**	No.		90.00	0.14													0	0.00
	Total of 5(3)(a)		10	240.00	0.37	0.00	0.00	0.00	0.00	0.00	0.00	0.00	0.00	0.00	0.00	0.00	0.00	0.00	0.00
5(3)(b)	**Promoting conservation, sustainable use and documentation of biological diversity including preservation of habitats, conservation of land and folk varieties and cultivars, domesticated stocks and breeds of animals and microorganisms and chronicling of knowledge relating to biological diversity**																		
i	Documentation and Publications of study materials for FTIs	LS	0	60.00	0.09													0	0.00
ii	Conducting Workshops/Trainings/Seminars/ Conferences for promoting conservation & sustainable use of biological diversity and capacity building of the frontline staff & officers.	No.	48	165.00	0.25													0	0.00
iii	Capacity building and gender sensitization of Forest Staff's through FTI /TERI/Forest academies/other institutions/CFRMC/JFMC /PRI	No.	476	2000.00	3.09													0	0.00
iv	Improving training inputs through guest faculties in Forest Training Institutes / Forest Academies	LS	0	20.00	0.03													0	0.00
	Total		524	2245.00	3.47	0	0.00	0	0.00	0	0.00	0	0.00	0	0.00	0	0.00	0	0.00
5(3)(c)	Purchase and maintenance of equipment or devices used for communication and information technology for the purpose of protection of forest and wildlife/AMC		0	950.00	1.47													0	0.00
5(3)(d)	**Construction, up-gradation and maintenance of :**																		
i	Inspection paths/Forest roads in forest area,	Km/No	1121	296.00	0.46							150	15.00					150	15.00
ii	flush causway	No.	101	380.00	0.59													0	0.00
iii	watch towers,	No.	30	300.00	0.46			1	10.00	1	10.00	1	10.00	1	10.00			4	40.00
iv	Check posts/Check Naka	No.	11	99.00	0.15							2	18.00	2	18.00			4	36.00
v	**Construction, up-gradation and maintenance of Inspection paths/Forest roads in forest area/flush causway/watch towers /Check posts/Check Naka (Mission Melghat)**	No.		210.00	0.32													0	0.00
	Total of 5(3)(d)		1263	1285.00	1.98	0.00	0.00	1.00	10.00	1.00	10.00	153.00	43.00	3.00	28.00	0.00	0.00	158.00	91.00

Rule No.	Particulars of work	Proposed for APO 2022-23			%	Wildlife circle													
						WL Mumbai													
						SGNP		WL Thane		WL Pune		WL Kolhapur		WL Nashik		WL Aurangabad		Total	
		Unit in	Phy	Fin		Phy	Fin	Phy	Fin	Phy	Fin	Phy	Fin	Phy	Fin	Phy	Fin	Phy	Fin
1	2	3	4	5	6	155	156	157	158	159	160	161	162	163	164	165	166	167	168
5(3)(e)	**Construction of residential and official buildings in forests for front line staffs deployed for protection of forest and wildlife**																		
i	Construction of Type I Quarters	**No.**	**91**	**2002.00**	**3.09**	**2**	**44.00**	**2**	**44.00**			**1**	**22.00**	**2**	**44.00**	**2**	**44.00**	**9**	**198.00**
ii	Construction of Type-1 (G+2) 4 Units Residental Building for Special Tiger Protection Force (STPF)	**No.**	**3**	**541.00**	**0.84**													**0**	**0.00**
iii	Construction of Type II Quarters	**No.**	**48**	**1248.00**	**1.93**	**1**	**26.00**	**1**	**26.00**	**1**	**26.00**							**3**	**78.00**
iv	Construction of Type III Quarters	**No.**	**36**	**1296.00**	**2.00**	**1**	**36.00**	**1**	**36.00**									**2**	**72.00**
v	Construction of Range office	**No.**	**38**	**1709.00**	**2.64**	**1**	**45.00**			**1**	**45.00**							**2**	**90.00**
vi	Amenities for Woman Front line staff	**No.**	**19**	**266.00**	**0.41**	**1**	**14.00**											**1**	**14.00**
	Total New Constructions		**235**	**7062.00**	**10.90**	**6.00**	**165.00**	**4.00**	**106.00**	**2.00**	**71.00**	**1.00**	**22.00**	**2.00**	**44.00**	**2.00**	**44.00**	**17.00**	**452.00**
5(3)(f)(i)	Casual engagement of local people or labours to assist regular staff of State Forest Department for works for protection of forest and wildlife undertaken from State Fund	**No.**	**0**	**80.00**	**0.12**													**0**	**0.00**
5(3)(f)(ii)	Casual engagement of local people or labours to assist regular staff of State Forest Department for works for protection of forest and wildlife undertaken from State Fund (Mission Melghat)	**No.**	**0**	**225.00**	**0.35**													**0**	**0.00**
5(3)(g)	Survey and mapping of forest areas for forest fire control, compensatory afforestation works, soil and moisture conservation, catchment area treatment and wildlife management for preparing annual plans to be executed from the State Fund	**LS**	**0**	**100.00**	**0.15**													**0**	**0.00**
5(3)(h)	Independent concurrent monitoring and evaluation and third party monitoring of various works undertaken from State Fund	**LS**	**0**	**202.00**	**0.31**													**0**	**0.00**
5(3)(i)	Publicity-cum-awareness programme and exhibition on the various schemes being implemented by the State Authority from State Fund (including Nature Awareness Program conduct by METDB)	**LS**	**0**	**343.00**	**0.53**		**2.00**		**2.00**		**2.00**		**2.00**		**2.00**		**2.00**	**0**	**12.00**
5(3)(j)	Production and distribution of quality planting material through certified nurseries at subsidized price for promotion of trees outside forests on Government lands promoted by State Government {Saplings for planned afforestation activities in the area under control / management of the Central Armed Police Forces (CAPFs) (As per National Authority Instructions)}	**LS**	**0**	**200.00**	**0.31**													**0**	**0.00**
5(3)(k)	forest certification and development of certification standards	**LS**	**0**	**0.00**	**0.00**													**0**	**0.00**
	Total for works under not more than 20% component		**2032.33**	**12932.00**	**19.96**	**6.00**	**167.00**	**5.00**	**118.00**	**3.00**	**83.00**	**154.00**	**67.00**	**5.00**	**74.00**	**2.00**	**46.00**	**175.00**	**555.00**
	Grand Total for NPV			**64776.00**	**100.00**		**304.00**		**334.50**		**228.00**		**147.00**		**312.00**		**73.00**		**1398.50**

ANNUAL PLAN OF OPERATIONS 2022-23						COMPONENT WISE ALLOTMENT FOR NPV WORKS							
Annexure-VII-A													(Amount in Rs. Lakhs)
Rule No.	Particulars of work	Proposed for APO 2022-23			%	APCCF (RET)				Publicity & Information Officer, Nagpur		PCCF (ITP) M.S. Nagpur	
						Research		Education and Training					
		Unit in	Phy	Fin		Phy	Fin	Phy	Fin	Phy	Fin	Phy	Fin
1	2	3	4	5	6	169	170	171	172	173	174	175	176
5 (2)	**Works under Not less than 80 % component (Rule 5 (2))**												
5(2)(a)	**Assisted Natural Regeneration**												
i	PPO Works	Ha	1321.000	2232.00	3.45								
ii	FYO Works	Ha	820.000	572.00	0.88								
	Total of 5(2)(a)		2141.000	2804.00	4.33	0.00	0.00	0.00	0.00	0.00	0.00	0.00	0.00
5(2)(b)	**Artificial Regeneration**												
i	Artificial Regeneration (PPO) (Mission Melghat)	Ha.	75.000	82.50	0.13								
ii	Artificial Regeneration 4th YO Works	Ha	8531.930	1537.00	2.37								
iii	Plantation along river banks (as per ICFRE DPR) (National Authority Scheme)	LS	0	300.00	0.46								
iv	Afforestation in scrub and barren land (National Authority Scheme) LIDAR	Ha	350.000	663.00	1.02								
v	Gramvan Plantation (Maintenance)	Ha	61.000	11.00	0.02								
	Total for Artificial Regeneration		9017.930	2593.50	4.00	0.00	0.00	0.00	0.00	0.00	0.00	0.00	0.00
5(2)(c)	**Silvicultural operations in forests**												
i	Fodder Development (PPO Works)	Ha	1466.360	3343.00	5.16								
ii	Fodder Development (PPO Works) (Mission Melghat)	Ha	200.000	200.00	0.31								
iii	Fodder Development (FYO Works)	Ha	1874.000	2023.00	3.12								
iv	Fodder Development (SYO Works)	Ha	2703.000	1975.00	3.05								
v	Cutback Operations	Ha	90.000	8.00	0.01								
	Total for Silvicultural operations in forests		6333.360	7549.00	11.65	0.00	0.00	0.00	0.00	0.00	0.00	0.00	0.00

Rule No.	Particulars of work	Proposed for APO 2022-23			%	APCCF (RET)				Publicity & Information Officer, Nagpur		PCCF (ITP) M.S. Nagpur	
						Research		Education and Training					
		Unit in	Phy	Fin		Phy	Fin	Phy	Fin	Phy	Fin	Phy	Fin
1	2	3	4	5	6	169	170	171	172	173	174	175	176
	Forest Protection												
5(2)(d)	**Protection of plantations and forests**												
i	Encroachment removal & Forest Protection	**Rmt**	**33054**	**1041.00**	**1.61**								
ii	Survey, Demarcation & Fencing of Sensitive forest areas	**Rmt**	**70874**	**2834.00**	**4.38**								
iii	Boundary Pillar Class I	**No.**	**18427**	**1475.00**	**2.28**								
iv	Boundary Pillar Class I I	**No.**	**10304**	**413.00**	**0.64**								
v	Construction, upgradation and maintenance of :												
(a)	Protection camps/Protection Huts	**No.**	**79**	**1580.00**	**2.44**								
(b)	Forest Custody	**No.**	**6**	**138.00**	**0.21**								
(c)	Labour Shed	**No.**	**48**	**316.00**	**0.49**								
vi	Construction, upgradation and maintenance of Protection camps/Protection Huts/Forest Custody/Labour Shed (Mission Melghat)	**No.**		**340.00**	**0.52**								
vii	Establishment and maintenance of wireless networks	**No.**	**59**	**116.00**	**0.18**								
viii	Establishment and maintenance of wireless networks (Mission Melghat)	**No.**	**24**	**60.00**	**0.09**								
ix	Improving mobility of frontline staff for forest protection & patrolling.	**LS**	**0**	**148.00**	**0.23**								
	Total for Protection of plantations and forests		**132875**	**8461.00**	**13.06**	**0.00**	**0.00**	**0.00**	**0.00**	**0.00**	**0.00**	**0.00**	**0.00**
5(2)(e)	**Pest and disease control in forest**	**Ha.**	**63**	**2.00**	**0.00**								
5(2)(f)	**Forest fire prevention and control operations**												
i	Cutting and burning of fire lines	**Km**	**26362**	**766.00**	**1.18**								
ii	Fire watchers	**No.**	**28431**	**750.00**	**1.16**								
	Total for Forest fire prevention and control operations		**54793**	**1516.00**	**2.34**	**0.00**	**0.00**	**0.00**	**0.00**	**0.00**	**0.00**	**0.00**	**0.00**
	Total for Forest Protection		**187731**	**9979.00**	**15.41**	**0.00**	**0.00**	**0.00**	**0.00**	**0.00**	**0.00**	**0.00**	**0.00**

Rule No.	Particulars of work	Proposed for APO 2022-23			%	APCCF (RET)				Publicity & Information Officer, Nagpur		PCCF (ITP) M.S. Nagpur	
						Research		Education and Training					
		Unit in	Phy	Fin		Phy	Fin	Phy	Fin	Phy	Fin	Phy	Fin
1	2	3	4	5	6	169	170	171	172	173	174	175	176
5(2)(g)	**Soil and moisture conservation works in the forest**												
i	Construction of Gabiyan Bandhara	**No.**	**1141**	**588.00**	**0.91**								
ii	Construction of Gabiyan Bandhara (Mission Melghat)	**No.**	**654**	**261.50**	**0.40**								
iii	Construction of Cement Bandhare	**No.**	**158**	**2370.00**	**3.66**								
iv	Construction of Cement Bandhare (Mission Melghat)	**No.**	**80**	**800.00**	**1.24**								
v	Construction of check dams	**No.**	**81**	**52.00**	**0.08**								
vi	Creation of Forest ponds/Vantale/Khodtadi	**No.**	**379**	**1137.00**	**1.76**								
vii	Deep CCT	**Ha/Rmt**	**1253 / 3345**	**769.00**	**1.19**								
viii	Earthen/Mati Nala Bunds	**No.**	**247**	**747.00**	**1.15**								
ix	Construction of LBS Structure (Mission Melghat)	**No.**	**500**	**90.00**	**0.14**								
x	**Soil and Water Conservation / Harvesting works (National Authority Scheme) LIDAR (As per santioned DPR)**	**LS**	**0**	**1000.00**	**1.54**								
	Total for SMC works		**3240**	**7814.50**	**12.06**	**0.00**	**0.00**	**0.00**	**0.00**	**0.00**	**0.00**	**0.00**	**0.00**
	Wildlife Management & Man-animal conflict mitigation												
5(2)(h)	**Voluntary relocation of villages from Protected areas (including cost of land and other property of the field owners)**	**No.**	**48**	**10000.00**	**15.44**								
5(2)(i)	**Improvement of wildlife habitat as provided in the approved wildlife management plan or working plan**												
i	All wildlife Management works will be carried out as per approved Management plan	**No.**	**15**	**4000.00**	**6.18**								
ii	Medow development	**Ha.**	**2809.370**	**784.00**	**1.21**								
iii	Creation & maintenance of water sources/water holes for wildlife	**No.**	**1142**	**764.00**	**1.18**								
iv	Creation & maintenance of water sources/water holes for wildlife (Mission Melghat)	**No.**		**120.00**	**0.19**								
v	Eradication of invasive species	**Ha.**	**8302.300**	**884.00**	**1.36**								
vi	Eradication of invasive species (Mission Melghat)	**Ha.**	**1600.000**	**272.00**	**0.42**								
	Total for Improvement of wildlife habitat		**13869**	**6824.00**	**10.53**	**0.00**	**0.00**	**0.00**	**0.00**	**0.00**	**0.00**	**0.00**	**0.00**

Rule No.	Particulars of work	Proposed for APO 2022-23			%	APCCF (RET)				Publicity & Information Officer, Nagpur		PCCF (ITP) M.S. Nagpur	
						Research		Education and Training					
		Unit in	Phy	Fin		Phy	Fin	Phy	Fin	Phy	Fin	Phy	Fin
1	2	3	4	5	6	169	170	171	172	173	174	175	176
5(2)(j)	Planting and rejuvenation of forest cover on non-forest land falling in wildlife corridors	LS	0	3.00	0.00								
5(2)(k)	**Establishment, operation and maintenance of animal rescue centre and veterinary treatment facilities for wild animals**												
i	Establishment, operation and maintenance of animal rescue centre/ Transit treatment Centre (Imcluding Provision for Gorewada)	No./LS	13	1377.00	2.13								
ii	Veterinary treatment facilities for wild animals (Imcluding Provision for Gorewada)	No./LS	4	304.00	0.47								
iii	Animal seizing & capturing devices	No./LS	189	406.00	0.63								
iv	Rescue emergency operations	No./LS	6	426.00	0.66								
v	Strengthening of Rapid rescue teams	No./LS	6	197.00	0.30								
vi	Management of rewilding of tiger cubs	LS	0	40.00	0.06								
	Total		218	2750.00	4.25	0.00	0.00	0.00	0.00	0.00	0.00	0.00	0.00
5(2)(l)	Supply of wood-saving cooking appliances and other forest produce saving devices in forest fringe villages as specified by the National Authority from time to time	No.	7250	135.00	0.21								
	Total for Wildlife Management & Man-animal conflict mitigation		21385	19712.00	30.43	0.00	0.00	0.00	0.00	0.00	0.00	0.00	0.00
5(2)(m)	**Management of biological diversity and biological resource**												
i	New research projects and Maintenance of Ongoing Project by research wing of Maharashtra Forest Department	No.	11	357.00	0.55		157.00						
ii	Base studies for forestry and wildlife related subjects	No.	4	158.00	0.24								
iii	Conservation of Wildlife like GIB, Wild buffalo, Turtle, Vultures, Owl, Sparrow, etc.	No.	5	877.00	1.35								
	Total		20	1392.00	2.15	0.00	157.00	0.00	0.00	0.00	0.00	0.00	0.00
	Grand Total for Activities under not less than 80% component		229868	51844.00	80.04	0.00	157.00	0.00	0.00	0.00	0.00	0.00	0.00

Rule No.	Particulars of work	Proposed for APO 2022-23			%	APCCF (RET)				Publicity & Information Officer, Nagpur		PCCF (ITP) M.S. Nagpur	
						Research		Education and Training					
		Unit in	Phy	Fin		Phy	Fin	Phy	Fin	Phy	Fin	Phy	Fin
1	2	3	4	5	6	169	170	171	172	173	174	175	176
5 (3)	**Works under not more than 20 % component (Rule 5 (3))**												
5(3)(a)(i)	**Establishment, up-gradation and maintenance of modern nurseries and other planting stock production facilities for production of quality planting materials**	**No.**	**10**	**150.00**	**0.23**								
5(3)(a)(ii)	**Establishment, up-gradation and maintenance of modern nurseries and other planting stock production facilities for production of quality planting materials (Mission Melghat)**	**No.**		**90.00**	**0.14**								
	Total of 5(3)(a)		**10**	**240.00**	**0.37**	**0.00**	**0.00**	**0.00**	**0.00**	**0.00**	**0.00**	**0.00**	**0.00**
5(3)(b)	**Promoting conservation, sustainable use and documentation of biological diversity including preservation of habitats, conservation of land and folk varieties and cultivars, domesticated stocks and breeds of animals and microorganisms and chronicling of knowledge relating to biological diversity**												
i	Documentation and Publications of study materials for FTIs	**LS**	**0**	**60.00**	**0.09**				**36.00**				
ii	Conducting Workshops/Trainings/Seminars/ Conferences for promoting conservation & sustainable use of biological diversity and capacity building of the frontline staff & officers.	**No.**	**48**	**165.00**	**0.25**				**65.00**				
iii	Capacity building and gender sensitization of Forest Staff's through FTI /TERI/Forest academies/other institutions/CFRMC/JFMC /PRI	**No.**	**476**	**2000.00**	**3.09**				**1875.00**				
iv	Improving training inputs through guest faculties in Forest Training Institutes / Forest Academies	**LS**	**0**	**20.00**	**0.03**								
	Total		**524**	**2245.00**	**3.47**	**0.00**	**0.00**	**0.00**	**1976.00**	**0.00**	**0.00**	**0.00**	**0.00**
5(3)(c)	Purchase and maintenance of equipment or devices used for communication and information technology for the purpose of protection of forest and wildlife/AMC		**0**	**950.00**	**1.47**								950.00
5(3)(d)	**Construction, up-gradation and maintenance of :**												
i	Inspection paths/Forest roads in forest area,	**Km/No**	**1121**	**296.00**	**0.46**								
ii	flush causway	**No.**	**101**	**380.00**	**0.59**								
iii	watch towers,	**No.**	**30**	**300.00**	**0.46**								
iv	Check posts/Check Naka	**No.**	**11**	**99.00**	**0.15**								
v	**Construction, up-gradation and maintenance of Inspection paths/Forest roads in forest area/flush causway/watch towers /Check posts/Check Naka (Mission Melghat)**	**No.**		**210.00**	**0.32**								
	Total of 5(3)(d)		**1263**	**1285.00**	**1.98**	**0.00**	**0.00**	**0.00**	**0.00**	**0.00**	**0.00**	**0.00**	**0.00**

Rule No.	Particulars of work	Proposed for APO 2022-23			%	APCCF (RET)				Publicity & Information Officer, Nagpur		PCCF (ITP) M.S. Nagpur	
						Research		Education and Training					
		Unit in	Phy	Fin		Phy	Fin	Phy	Fin	Phy	Fin	Phy	Fin
1	2	3	4	5	6	169	170	171	172	173	174	175	176
5(3)(e)	**Construction of residential and official buildings in forests for front line staffs deployed for protection of forest and wildlife**												
i	Construction of Type I Quarters	**No.**	**91**	**2002.00**	**3.09**	**2.00**	44.00						
ii	Construction of Type-1 (G+2) 4 Units Residental Building for Special Tiger Protection Force (STPF)	**No.**	**3**	**541.00**	**0.84**								
iii	Construction of Type II Quarters	**No.**	**48**	**1248.00**	**1.93**	**1.00**	26.00						
iv	Construction of Type III Quarters	**No.**	**36**	**1296.00**	**2.00**								
v	Construction of Range office	**No.**	**38**	**1709.00**	**2.64**								
vi	Amenities for Woman Front line staff	**No.**	**19**	**266.00**	**0.41**								
	Total New Constructions		**235**	**7062.00**	**10.90**	**3.00**	**70.00**	**0.00**	**0.00**	**0.00**	**0.00**	**0.00**	**0.00**
5(3)(f)(i)	Casual engagement of local people or labours to assist regular staff of State Forest Department for works for protection of forest and wildlife undertaken from State Fund	**No.**	**0**	**80.00**	**0.12**								
5(3)(f)(ii)	Casual engagement of local people or labours to assist regular staff of State Forest Department for works for protection of forest and wildlife undertaken from State Fund (Mission Melghat)	**No.**	**0**	**225.00**	**0.35**								
5(3)(g)	Survey and mapping of forest areas for forest fire control, compensatory afforestation works, soil and moisture conservation, catchment area treatment and wildlife management for preparing annual plans to be executed from the State Fund	**LS**	**0**	**100.00**	**0.15**								
5(3)(h)	Independent concurrent monitoring and evaluation and third party monitoring of various works undertaken from State Fund	**LS**	**0**	**202.00**	**0.31**								
5(3)(i)	Publicity-cum-awareness programme and exhibition on the various schemes being implemented by the State Authority from State Fund (including Nature Awareness Program conduct by METDB)	**LS**	**0**	**343.00**	**0.53**						**150.00**		
5(3)(j)	Production and distribution of quality planting material through certified nurseries at subsidized price for promotion of trees outside forests on Government lands promoted by State Government {Saplings for planned afforestation activities in the area under control / management of the Central Armed Police Forces (CAPFs) (As per National Authority Instructions)}	**LS**	**0**	**200.00**	**0.31**								
5(3)(k)	forest certification and development of certification standards	**LS**	**0**	**0.00**	**0.00**								
	Total for works under not more than 20% component		**2032.33**	**12932.00**	**19.96**	**3.00**	**70.00**	**0.00**	**1976.00**	**0.00**	**150.00**	**0.00**	**950.00**
	Grand Total for NPV			**64776.00**	**100.00**		**227.00**		**1976.00**		**150.00**		**950.00**

ANNUAL PLAN OF OPERATIONS 2022-23						COMPONENT WISE ALLOTMENT FOR NPV WORKS							
Annexure-VII-A												(Amount in Rs. Lakhs)	
Rule No.	Particulars of work	Proposed for APO 2022-23			%	PCCF (WL) M.S. Nagpur		APCCF, Mangrove, Mumbai		APCCF & CEO (Maha CAMPA)		CCF (Evaluation) Nagpur	
		Unit in	Phy	Fin		Phy	Fin	Phy	Fin	Phy	Fin	Phy	Fin
1	2	3	4	5	6	177	178	179	180	181	182	183	184
5 (2)	**Works under Not less than 80 % component (Rule 5 (2))**												
5(2)(a)	**Assisted Natural Regeneration**												
i	PPO Works	Ha	1321.000	2232.00	3.45								
ii	FYO Works	Ha	820.000	572.00	0.88								
	Total of 5(2)(a)		2141.000	2804.00	4.33	0.00	0.00	0.00	0.00	0.00	0.00	0.00	0.00
5(2)(b)	**Artificial Regeneration**												
i	Artificial Regeneration (PPO) (Mission Melghat)	Ha.	75.000	82.50	0.13								
ii	Artificial Regeneration 4th YO Works	Ha	8531.930	1537.00	2.37								
iii	Plantation along river banks (as per ICFRE DPR) (National Authority Scheme)	LS	0	300.00	0.46								
iv	Afforestation in scrub and barren land (National Authority Scheme) LIDAR	Ha	350.000	663.00	1.02								
v	Gramvan Plantation (Maintenance)	Ha	61.000	11.00	0.02								
	Total for Artificial Regeneration		9017.930	2593.50	4.00	0.00	0.00	0.00	0.00	0.00	0.00	0.00	0.00
5(2)(c)	**Silvicultural operations in forests**												
i	Fodder Development (PPO Works)	Ha	1466.360	3343.00	5.16								
ii	Fodder Development (PPO Works) (Mission Melghat)	Ha	200.000	200.00	0.31								
iii	Fodder Development (FYO Works)	Ha	1874.000	2023.00	3.12								
iv	Fodder Development (SYO Works)	Ha	2703.000	1975.00	3.05								
v	Cutback Operations	Ha	90.000	8.00	0.01								
	Total for Silvicultural operations in forests		6333.360	7549.00	11.65	0.00	0.00	0.00	0.00	0.00	0.00	0.00	0.00

Rule No.	Particulars of work	Proposed for APO 2022-23			%	PCCF (WL) M.S. Nagpur		APCCF, Mangrove, Mumbai		APCCF & CEO (Maha CAMPA)		CCF (Evaluation) Nagpur	
		Unit in	Phy	Fin		Phy	Fin	Phy	Fin	Phy	Fin	Phy	Fin
1	2	3	4	5	6	177	178	179	180	181	182	183	184
	Forest Protection												
5(2)(d)	**Protection of plantations and forests**												
i	Encroachment removal & Forest Protection	**Rmt**	**33054**	**1041.00**	**1.61**								
ii	Survey, Demarcation & Fencing of Sensitive forest areas	**Rmt**	**70874**	**2834.00**	**4.38**								
iii	Boundary Pillar Class I	**No.**	**18427**	**1475.00**	**2.28**								
iv	Boundary Pillar Class I I	**No.**	**10304**	**413.00**	**0.64**								
v	Construction, upgradation and maintenance of :												
(a)	Protection camps/Protection Huts	**No.**	**79**	**1580.00**	**2.44**								
(b)	Forest Custody	**No.**	**6**	**138.00**	**0.21**								
(c)	Labour Shed	**No.**	**48**	**316.00**	**0.49**			2.00	40.00				
vi	Construction, upgradation and maintenance of Protection camps/Protection Huts/Forest Custody/Labour Shed (Mission Melghat)	**No.**		**340.00**	**0.52**								
vii	Establishment and maintenance of wireless networks	**No.**	**59**	**116.00**	**0.18**								
viii	Establishment and maintenance of wireless networks (Mission Melghat)	**No.**	**24**	**60.00**	**0.09**								
ix	Improving mobility of frontline staff for forest protection & patrolling.	**LS**	**0**	**148.00**	**0.23**						14.00		
	Total for Protection of plantations and forests		**132875**	**8461.00**	**13.06**	**0.00**	**0.00**	**2.00**	**40.00**	**0.00**	**14.00**	**0.00**	**0.00**
5(2)(e)	**Pest and disease control in forest**	**Ha.**	**63**	**2.00**	**0.00**								
5(2)(f)	**Forest fire prevention and control operations**												
i	Cutting and burning of fire lines	**Km**	**26362**	**766.00**	**1.18**								
ii	Fire watchers	**No.**	**28431**	**750.00**	**1.16**								
	Total for Forest fire prevention and control operations		**54793**	**1516.00**	**2.34**	**0.00**	**0.00**	**0.00**	**0.00**	**0.00**	**0.00**	**0.00**	**0.00**
	Total for Forest Protection		**187731**	**9979.00**	**15.41**	**0.00**	**0.00**	**2.00**	**40.00**	**0.00**	**14.00**	**0.00**	**0.00**

Rule No.	Particulars of work	Proposed for APO 2022-23			%	PCCF (WL) M.S. Nagpur		APCCF, Mangrove, Mumbai		APCCF & CEO (Maha CAMPA)		CCF (Evaluation) Nagpur	
		Unit in	Phy	Fin		Phy	Fin	Phy	Fin	Phy	Fin	Phy	Fin
1	2	3	4	5	6	177	178	179	180	181	182	183	184
5(2)(g)	**Soil and moisture conservation works in the forest**												
i	Construction of Gabiyan Bandhara	**No.**	**1141**	**588.00**	**0.91**								
ii	Construction of Gabiyan Bandhara (Mission Melghat)	**No.**	**654**	**261.50**	**0.40**								
iii	Construction of Cement Bandhare	**No.**	**158**	**2370.00**	**3.66**								
iv	Construction of Cement Bandhare (Mission Melghat)	**No.**	**80**	**800.00**	**1.24**								
v	Construction of check dams	**No.**	**81**	**52.00**	**0.08**								
vi	Creation of Forest ponds/Vantale/Khodtadi	**No.**	**379**	**1137.00**	**1.76**								
vii	Deep CCT	**Ha/Rmt**	**1253 / 3345**	**769.00**	**1.19**								
viii	Earthen/Mati Nala Bunds	**No.**	**247**	**747.00**	**1.15**								
ix	Construction of LBS Structure (Mission Melghat)	**No.**	**500**	**90.00**	**0.14**								
x	**Soil and Water Conservation / Harvesting works (National Authority Scheme) LIDAR (As per santioned DPR)**	**LS**	**0**	**1000.00**	**1.54**								
	Total for SMC works		**3240**	**7814.50**	**12.06**	**0.00**	**0.00**	**0.00**	**0.00**	**0.00**	**0.00**	**0.00**	**0.00**
	Wildlife Management & Man-animal conflict mitigation												
5(2)(h)	**Voluntary relocation of villages from Protected areas (including cost of land and other property of the field owners)**	**No.**	**48**	**10000.00**	**15.44**		**10000.00**						
5(2)(i)	**Improvement of wildlife habitat as provided in the approved wildlife management plan or working plan**												
i	All wildlife Management works will be carried out as per approved Management plan	**No.**	**15**	**4000.00**	**6.18**		**4000.00**						
ii	Medow development	**Ha.**	**2809.370**	**784.00**	**1.21**								
iii	Creation & maintenance of water sources/water holes for wildlife	**No.**	**1142**	**764.00**	**1.18**								
iv	Creation & maintenance of water sources/water holes for wildlife (Mission Melghat)	**No.**		**120.00**	**0.19**								
v	Eradication of invasive species	**Ha.**	**8302.300**	**884.00**	**1.36**								
vi	Eradication of invasive species (Mission Melghat)	**Ha.**	**1600.000**	**272.00**	**0.42**								
	Total for Improvement of wildlife habitat		**13869**	**6824.00**	**10.53**	**0.00**	**4000.00**	**0.00**	**0.00**	**0.00**	**0.00**	**0.00**	**0.00**

Rule No.	Particulars of work	Proposed for APO 2022-23			%	PCCF (WL) M.S. Nagpur		APCCF, Mangrove, Mumbai		APCCF & CEO (Maha CAMPA)		CCF (Evaluation) Nagpur	
		Unit in	Phy	Fin		Phy	Fin	Phy	Fin	Phy	Fin	Phy	Fin
1	2	3	4	5	6	177	178	179	180	181	182	183	184
5(2)(j)	Planting and rejuvenation of forest cover on non-forest land falling in wildlife corridors	LS	0	3.00	0.00								
5(2)(k)	**Establishment, operation and maintenance of animal rescue centre and veterinary treatment facilities for wild animals**												
i	Establishment, operation and maintenance of animal rescue centre/ Transit treatment Centre (Imcluding Provision for Gorewada)	No./LS	13	1377.00	2.13		1220.00						
ii	Veterinary treatment facilities for wild animals (Imcluding Provision for Gorewada)	No./LS	4	304.00	0.47		100.00						
iii	Animal seizing & capturing devices	No./LS	189	406.00	0.63		50.00						
iv	Rescue emergency operations	No./LS	6	426.00	0.66		260.00						
v	Strengthening of Rapid rescue teams	No./LS	6	197.00	0.30		70.00						
vi	Management of rewilding of tiger cubs	LS	0	40.00	0.06		20.00						
	Total		218	2750.00	4.25	0.00	1720.00	0.00	0.00	0.00	0.00	0.00	0.00
5(2)(l)	Supply of wood-saving cooking appliances and other forest produce saving devices in forest fringe villages as specified by the National Authority from time to time	No.	7250	135.00	0.21								
	Total for Wildlife Management & Man-animal conflict mitigation		21385	19712.00	30.43	0.00	15720.00	0.00	0.00	0.00	0.00	0.00	0.00
5(2)(m)	**Management of biological diversity and biological resource**												
i	New research projects and Maintenance of Ongoing Project by research wing of Maharashtra Forest Department	No.	11	357.00	0.55		100.00				100.00		
ii	Base studies for forestry and wildlife related subjects	No.	4	158.00	0.24		158.00						
iii	Conservation of Wildlife like GIB, Wild buffalo, Turtle, Vultures, Owl, Sparrow, etc.	No.	5	877.00	1.35		862.00						
	Total		20	1392.00	2.15	0.00	1120.00	0.00	0.00	0.00	100.00	0.00	0.00
	Grand Total for Activities under not less than 80% component		229868	51844.00	80.04	0.00	16840.00	2.00	40.00	0.00	114.00	0.00	0.00

Rule No.	Particulars of work	Proposed for APO 2022-23			%	PCCF (WL) M.S. Nagpur		APCCF, Mangrove, Mumbai		APCCF & CEO (Maha CAMPA)		CCF (Evaluation) Nagpur	
		Unit in	Phy	Fin		Phy	Fin	Phy	Fin	Phy	Fin	Phy	Fin
1	2	3	4	5	6	177	178	179	180	181	182	183	184
5 (3)	**Works under not more than 20 % component (Rule 5 (3))**												
5(3)(a)(i)	**Establishment, up-gradation and maintenance of modern nurseries and other planting stock production facilities for production of quality planting materials**	No.	10	150.00	0.23						50.00		
5(3)(a)(ii)	**Establishment, up-gradation and maintenance of modern nurseries and other planting stock production facilities for production of quality planting materials (Mission Melghat)**	No.		90.00	0.14								
	Total of 5(3)(a)		10	240.00	0.37	0.00	0.00	0.00	0.00	0.00	50.00	0.00	0.00
5(3)(b)	**Promoting conservation, sustainable use and documentation of biological diversity including preservation of habitats, conservation of land and folk varieties and cultivars, domesticated stocks and breeds of animals and microorganisms and chronicling of knowledge relating to biological diversity**												
i	Documentation and Publications of study materials for FTIs	LS	0	60.00	0.09						24.00		
ii	Conducting Workshops/Trainings/Seminars/ Conferences for promoting conservation & sustainable use of biological diversity and capacity building of the frontline staff & officers.	No.	48	165.00	0.25						100.00		
iii	Capacity building and gender sensitization of Forest Staff's through FTI /TERI/Forest academies/other institutions/CFRMC/JFMC /PRI	No.	476	2000.00	3.09						125.00		
iv	Improving training inputs through guest faculties in Forest Training Institutes / Forest Academies	LS	0	20.00	0.03						20.00		
	Total		524	2245.00	3.47	0.00	0.00	0.00	0.00	0.00	269.00	0.00	0.00
5(3)(c)	Purchase and maintenance of equipment or devices used for communication and information technology for the purpose of protection of forest and wildlife/AMC		0	950.00	1.47								
5(3)(d)	**Construction, up-gradation and maintenance of :**												
i	Inspection paths/Forest roads in forest area,	Km/No	1121	296.00	0.46								
ii	flush causway	No.	101	380.00	0.59								
iii	watch towers,	No.	30	300.00	0.46								
iv	Check posts/Check Naka	No.	11	99.00	0.15								
v	**Construction, up-gradation and maintenance of Inspection paths/Forest roads in forest area/flush causway/watch towers /Check posts/Check Naka (Mission Melghat)**	No.		210.00	0.32								
	Total of 5(3)(d)		1263	1285.00	1.98	0.00	0.00	0.00	0.00	0.00	0.00	0.00	0.00

Rule No.	Particulars of work	Proposed for APO 2022-23			%	PCCF (WL) M.S. Nagpur		APCCF, Mangrove, Mumbai		APCCF & CEO (Maha CAMPA)		CCF (Evaluation) Nagpur	
		Unit in	Phy	Fin		Phy	Fin	Phy	Fin	Phy	Fin	Phy	Fin
1	2	3	4	5	6	177	178	179	180	181	182	183	184
5(3)(e)	**Construction of residential and official buildings in forests for front line staffs deployed for protection of forest and wildlife**												
i	Construction of Type I Quarters	**No.**	**91**	**2002.00**	**3.09**								
ii	Construction of Type-1 (G+2) 4 Units Residental Building for Special Tiger Protection Force (STPF)	**No.**	**3**	**541.00**	**0.84**								
iii	Construction of Type II Quarters	**No.**	**48**	**1248.00**	**1.93**								
iv	Construction of Type III Quarters	**No.**	**36**	**1296.00**	**2.00**								
v	Construction of Range office	**No.**	**38**	**1709.00**	**2.64**								
vi	Amenities for Woman Front line staff	**No.**	**19**	**266.00**	**0.41**								
	Total New Constructions		**235**	**7062.00**	**10.90**	**0.00**	**0.00**	**0.00**	**0.00**	**0.00**	**0.00**	**0.00**	**0.00**
5(3)(f)(i)	Casual engagement of local people or labours to assist regular staff of State Forest Department for works for protection of forest and wildlife undertaken from State Fund	**No.**	**0**	**80.00**	**0.12**						**80.00**		
5(3)(f)(ii)	Casual engagement of local people or labours to assist regular staff of State Forest Department for works for protection of forest and wildlife undertaken from State Fund (Mission Melghat)	**No.**	**0**	**225.00**	**0.35**								
5(3)(g)	Survey and mapping of forest areas for forest fire control, compensatory afforestation works, soil and moisture conservation, catchment area treatment and wildlife management for preparing annual plans to be executed from the State Fund	**LS**	**0**	**100.00**	**0.15**						**100.00**		
5(3)(h)	Independent concurrent monitoring and evaluation and third party monitoring of various works undertaken from State Fund	**LS**	**0**	**202.00**	**0.31**						**200.00**		**2.00**
5(3)(i)	Publicity-cum-awareness programme and exhibition on the various schemes being implemented by the State Authority from State Fund (including Nature Awareness Program conduct by METDB)	**LS**	**0**	**343.00**	**0.53**						**59.00**		
5(3)(j)	Production and distribution of quality planting material through certified nurseries at subsidized price for promotion of trees outside forests on Government lands promoted by State Government {Saplings for planned afforestation activities in the area under control / management of the Central Armed Police Forces (CAPFs) (As per National Authority Instructions)}	**LS**	**0**	**200.00**	**0.31**						**200.00**		
5(3)(k)	forest certification and development of certification standards	**LS**	**0**	**0.00**	**0.00**								
	Total for works under not more than 20% component		**2032.33**	**12932.00**	**19.96**	**0.00**	**0.00**	**0.00**	**0.00**	**0.00**	**958.00**	**0.00**	**2.00**
	Grand Total for NPV			**64776.00**	**100.00**		**16840.00**		**40.00**		**1072.00**		**2.00**

Annexure – VII – B

(Details of NPV)

ANNUAL PLAN OF OPERATIONS 2022-23

FORMAT VII B---- Forestry and other activities proposed under Net Present Value amount (Please see Rule no. 5(2), 5(3), and proviso under Rule 5(3) (NPV - 04)

Amravati Territorial Circle

Works proposed					Location of work						Latlong	
Rule No.	**Item of work**	**Quantity**	**Rate**	**Amount (Rs. in Lakhs**	**Circle**	**Division**	**Range**	**Round**	**Beat**	**Compartment No**	**Latitude**	**Longitude**
1	**2**	**3**	**4**	**5**	**6**	**7**	**8**	**9**	**10**	**11**	**12**	**13**
5 (2)	**Not less than eighty per cent Following activities for the forest and wildlife management**											
5 (2)(a) ii	Assisted Natural regeneration (ANR) Area in ha. FYO Works	15	0.94	14.00	Amravati	MTD. Paratwada	Dharni	Dharni	Khariya	Comp No.1301	N21°35'40.10"	E76°52'25.10"
		25	0.94	23.50	Amravati	MTD. Paratwada	Susarda	Bibamal	S Bibamal	Comp No.119	N21 23 48.39	E76 50' 3.82
		25	0.94	23.50	Amravati	MTD. Paratwada	Susarda	Bibamal	Goulandoh	Comp No.1307	N21 25 28	E76 47 19
		15	0.94	14.00	Amravati	MTD. Paratwada	Jarida	Rahu	Tingrya	396	N 21°42'17.1	E77° 26'45.4
	Total MTD Paratwada	**80**		**75.00**								
5 (2)(a) ii	Assisted Natural regeneration (ANR) FYO Works	25	0.94	23.50	Amravati	Akola	Barshitakli	Lohaghadh	Sakharvira	127	N.20.024.20.02	E.077.06.45.91
		25	0.94	23.50	Amravati	Akola	Barshitakli	Lohaghadh	Dhanora	125	N 20.24.15	E 077.7.1
	Total Akola Division	**50**		**47.00**								
	Total 5 (2)(a)	**130**		**122.00**								
5 (2)(b) i	Artificial Regeneration (PPO) (Mission Melghat)	30	1.10	33.00	Amravati	Melghat T. Dn.	Susarda	Bibamal	S Bibamal	1303	N21'25'32.2"	E076'50'52.8"
		15	1.10	16.50	Amravati	Melghat T. Dn.	Susarda	Kasmar	Kawadaziri	1208	N21'23'30"	E076'55'30"
		15	1.10	16.50	Amravati	Melghat T. Dn.	Dharni	Chitri	Chitri	733	N21'52'84"	E077'06'29"
		15	1.10	16.50	Amravati	Melghat T. Dn.	Dharni	Bod	Bod	719	N21'32'01.28	E076'58'33.26
		75		**82.50**								

Works proposed					Location of work						Latlong	
Rule No.	Item of work	Quantity	Rate	Amount (Rs. in Lakhs	Circle	Division	Range	Round	Beat	Compartment No	Latitude	Longitude
1	2	3	4	5	6	7	8	9	10	11	12	13
5 (2)(b) ii	**Artificial Regeneration (AR 4 th year)**	25	0.18	4.50	Amravati	Amravati	Chandur R	Chandur R	Malegaon	340	N.2058.177	E.77.57.615
		10	0.18	1.80	Amravati	Amravati	Chandur R	Chandur R	Warha	252	N.20.57.918	E.78.04.770
		15	0.18	2.70	Amravati	Amravati	Chandur R	Chandur R	Warha	258	N.20.58.083	E.78.04.055
		25	0.18	4.50	Amravati	Amravati	Chandur R	Chandur R	Savanga	307	N.20.52.316	E.77.53.659
		25	0.18	4.50	Amravati	Amravati	Chandur R	Chandur R	S. Chirodi	304	N.20.51.603	E.77.55.591
		20	0.18	3.50	Amravati	Amravati	Chandur R	Chandur R	N. Chirodi	298	N.20.54.631	E.77.54.981
		25	0.18	4.50	Amravati	Amravati	Morshi	Morshi	Kathapur	719	N.21.206913	E.72.909482
		25	0.18	4.50	Amravati	Amravati	Morshi	Morshi	S. Khanapur	633	N.21.30991	E.77.93.3132
		15	0.18	2.70	Amravati	Amravati	Morshi	Morshi	N. Khanapur	812	N.21.16.8774	E.78026855
		26	0.18	4.50	Amravati	Amravati	warud	warud	Ekadara	1064 P	N.21.444587	E78.435023
		10	0.18	1.80	Amravati	Amravati	warud	warud	Shendurjana Gh	1085 P	N21468517	E.78.2775911
		14	0.18	2.50	Amravati	Amravati	warud	warud	Shendurjana Gh	1077P	N21.538757	E78.309768
		25	0.18	4.50	Amravati	Amravati	warud	warud	Humanpeth	1093 P	N21.544113	E78.324967
		15	0.18	2.70	Amravati	Amravati	warud	warud	Jamgaon	1,004	N21.599143	E78.406524
		10	0.18	1.80	Amravati	Amravati	Paratwada	paratwada	Pandhari	417	N212120.6	E773326.9
		10	0.18	1.80	Amravati	Amravati	Paratwada	paratwada	Talegaon	406	N210922.7	E774342.20
		15	0.18	2.70	Amravati	Amravati	Paratwada	paratwada	Vishroli	438	N212149.0	E774427.9
		15	0.18	2.70	Amravati	Amravati	Paratwada	paratwada	Chichkumbha	433	N212348.4	E774957.2
		10	0.18	1.80	Amravati	Amravati	Paratwada	paratwada	Ghatladki	454	N212127.8	E774826.0
		20	0.18	3.60	Amravati	Amravati	Paratwada	paratwada	Ghatladki	4,57,458	N212223.7	E774946.4
		20	0.18	3.60	Amravati	Amravati	Paratwada	paratwada	Asdpur	491/492	N210612.8	E772940.7
		20	0.18	3.60	Amravati	Amravati	Wadali	Wadali	Ajangaon B	28	N20.505200	E77.465100
		15	0.18	2.70	Amravati	Amravati	Wadali	Wadali	Bhankheda	20	N20.5225	E77.4949
		25	0.18	4.50	Amravati	Amravati	Wadali	Wadali	Pimpalkhuta	60	N20.5813	E77.5438
		25	0.18	4.50	Amravati	Amravati	Wadali	Wadali	Phora	37	N20.53798	E77.51672
		20	0.18	3.50	Amravati	Amravati	Wadali	Wadali	Udkhed	50	N20.848945	E77.818495
	Total Amravati Division	**480**		**86.00**								

Works proposed					Location of work						Latlong	
Rule No.	Item of work	Quantity	Rate	Amount (Rs. in Lakhs	Circle	Division	Range	Round	Beat	Compartment No	Latitude	Longitude
1	2	3	4	5	6	7	8	9	10	11	12	13
5 (2)(b) ii	Artificial Regeneration (AR 4 th Year)	10	0.18	2.00	Amravati	Melghat (T) paratwada	Dharni	Patiya	Gobarkahu	Comp No.692	N21°37'33.98"	E77°1'58.99"
		20	0.18	3.60	Amravati	Melghat (T) paratwada	Dharni	Chitri	Kotha	Comp No.1285	N21°29'41.20"	E77° 3'30.18"
		20	0.18	3.60	Amravati	Melghat (T) paratwada	Susarda	Bibamal	Bibamal	Comp No.1200	N 22°40'73.45" 76°83'77.45"E	E 76°83'77.45"
		20	0.18	3.60	Amravati	Melghat (T) paratwada	Susarda	Bibamal	Bibamal	Comp No.1302	N21°45'49.83"	E76°86'06.84"
		20	0.18	3.60	Amravati	Melghat (T) paratwada	Susarda	Bibamal	S. Bibamal	Comp No.1193	N 21°23'43.35"	E76°81'56.92"
		25	0.18	4.55	Amravati	Melghat (T) paratwada	Ghatang	Ghatang	Salona	Comp No56	N21 26 42	E77 25 15
		25	0.18	4.55	Amravati	Melghat (T) paratwada	Jarida	Khari	Hilda	370	N 21°41'66.4	E77° 26'58.10
		25	0.18	4.50	Amravati	Melghat (T) paratwada	Jarida	Khari	Hilda	407	N 21°75'54.98	E77° 47'75.66
		10	0.18	2.00	Amravati	Melghat (T) paratwada	Jarida	Khari	Hilda	385	N 21°72'46.75	E77° 44'29.23
	Total Melghat (T) Paratwada	**175**		**32.00**								
5 (2)(b) ii	Artificial Regeneration (AR. 4 th Year)	25	0.18	4.50	Amravati	Buldana	Jalgaon Jamod	Jamod	Chaldhata	623	N21.147808	E76.558513
		25	0.18	4.50	Amravati	Buldana	Jalgaon Jamod	Jalgaon	Bhingara	629	N21 55 6	E76 33 7
		25	0.18	4.50	Amravati	Buldana	Motala	Rajur	Khairkhed	327	N20.610346	E76.145226
		25	0.18	4.50	Amravati	Buldana	Motala	Rajur	Rajur	492	N20.604825	E76.189277
		25	0.18	4.50	Amravati	Buldana	Mehkar	Bibi	Lonar	596	N20 63 9	E76 20 4
		25	0.18	4.50	Amravati	Buldana	Ghatbori	Mandwa	Warwand	193	N20 23 16	E76 38 50
		25	0.18	4.50	Amravati	Buldana	D.Raja	D.Raja	Aland	535	N20.065349	E76.104519
		25	0.18	4.50	Amravati	Buldana	D.Raja	D.Raja	Aland	536	N20.061918	E76.105615
		25	0.18	4.50	Amravati	Buldana	Khamgaon	Lakhanwada	P.Dhangar	199	N20.4438	E76.645287
		25	0.18	4.50	Amravati	Buldana	Buldana	Dongarkhandala	Karwand	517	N20.466349	E76.338948
	Total Buldhana Division	**250**		**45.00**								

Works proposed					Location of work						Latlong	
Rule No.	**Item of work**	**Quantity**	**Rate**	**Amount (Rs. in Lakhs**	**Circle**	**Division**	**Range**	**Round**	**Beat**	**Compartment No**	**Latitude**	**Longitude**
1	**2**	**3**	**4**	**5**	**6**	**7**	**8**	**9**	**10**	**11**	**12**	**13**
5 (2)(b) ii	Artificial Regeneration (AR 4 th Year)	13	0.18	2.35	Amravati	Akola	Akola	Akot	Hanwadi	B-38	N20.56.21.21	E76.56.25.24
		19	0.18	3.42	Amravati	Akola	Akola	Murtijapur	Kinkhed	4	N20.38.49.05	E77.23.59.95
		25	0.18	4.50	Amravati	Akola	Barshitakli	Barshitakli	Mahan	C-67	N20.30.37	E77.08.04.16
		30	0.18	5.40	Amravati	Akola	Barshitakli	Barshitakli	Mahan	C-68	N20.30.018.14	E7708.30.85
		24	0.18	4.33	Amravati	Akola	Alegaon	Alegaon	Pimpaldoli	24	N20.2132	E076.5026
	Total Akola Division	**111**		**20.00**								
	Total. Item No. 5 (2)(b) i & ii	**1091.00**		**265.50**								
5(2)(b)iii	**Afforestation in scrub and barren land (National Authority Scheme) LIDAR as per DPR (FYO)**	**25**		16.35	Amravati	Amravati	Wadali	Wadali	Pohara	42	N20.875813	E77.875058
	Artificial Regeneration Plantation(FYO)	**60**		38.34	Amravati	Amravati	Cha.Rly	Malegaon	Mardi	351	N205150	E775629
	Fodder	**25**		23.00	Amravati	Amravati	Wadali		Parsoda	74	N20.54086	E70.51679
	Fodder	**40**		36.80	Amravati	Amravati	Cha.Rly	Malegaon	Mardi	352	N206356	E778256
	Eco system Restoration	**50**		48.26	Amravati	Amravati	Wadali	Pohara	Indala	71,72	N20.54749	E77.49827
	Afforestation in scrub and barren land (National Authority Scheme) LIDAR (PPO)	75		250.00	Amravati	Amravati	wadali	Pohara	Pimpalkhuta	60	N20.6524	E77.6285
		75		250.00	Amravati	Amravati	Chandur rly	Chirodi	Hatla	313	N215352	E725425
	Total. Item No. 5 (2)(b) iii	**350**		**662.75**								
	Total 5 (2) (b)	**1441**		**928.25**								

Works proposed					Location of work						Latlong	
Rule No.	Item of work	Quantity	Rate	Amount (Rs. in Lakhs	Circle	Division	Range	Round	Beat	Compartment No	Latitude	Longitude
1	2	3	4	5	6	7	8	9	10	11	12	13
5(2)(c)	**Silivicultrual Operation in forest (National Livestock Mission)**											
i	Fodder Development (PPO work in Ha.)	25	2.28	57.00	Amravati	Amravati	Wadali	Pohara	Pimpalkhuta	59	N20.7856	E77.8547
		25	2.28	57.00	Amravati	Amravati	Warud	Pusla	Sheghat	1085	N21.3	E78.203
		15	2.28	34.20	Amravati	Amravati	Morshi	Lakhara	Goregaon	899	N21.263	E78.96
		20	2.28	45.60	Amravati	Amravati	Chandur	Chandur	Chandur	208	N2051.09	E7754.58
		20	2.28	45.60	Amravati	Amravati	Chandur	Malegaon	Chikhali	352	N2057.42	E7755.15
		20	2.28	45.60	Amravati	Amravati	Chandur	Chandur	Wahra	257P	N2057.42	E7755.15
		25	2.28	57.00	Amravati	Amravati	Paratwada	Shirajgaon	Vishroli	442	N21.37317	E77.745078
	Total Amravati Division (PPO)	**150**		**342.00**								
i	Fodder Development (PPO work in Ha.)	20.00	2.28	45.60	Amravati	Buldana	Mehkar	Lonar	Lonar	575	N19 55 11	E76 33 21
		20.00	2.28	45.60	Amravati	Buldana	Mehkar	Titvi	Titvi	578	N19 86 67	E76 56 12
		20.00	2.28	45.60	Amravati	Buldana	Mehkar	Titvi	Titvi	580	N19 52 23	E76 32 51
		20.00	2.28	45.60	Amravati	Buldana	Motala	Motala	Chichkhed	508	N20.4015	E76.2151
		20.00	2.28	45.60	Amravati	Buldana	Motala	Motala	Chichkhed	508	N20.4015	E76.2151
		25.00	2.28	57.00	Amravati	Buldana	Motala	Rajur	Rajur	491	N20.3620	E76.1147
		20.00	2.28	45.60	Amravati	Buldana	Motala	Rajur	Rajur	492	N20.3617	E76.1154
		20.00	2.28	45.60	Amravati	Buldana	Motala	Rajur	Rajur	494	N20.3909	E76.2028
		25.00	2.28	57.00	Amravati	Buldana	Khamgaon	Lakhanwada	Shirlanemane	619	N20.46.26.28	E76.66.74.85
		25.00	2.28	57.00	Amravati	Buldana	Khamgaon	Lakhanwada	Lakhanwada BD	203	N20.45 69 75	E76.62 269
		25.00	2.28	57.00	Amravati	Buldana	Khamgaon	Lakhanwada	Lakhanwada KD	467	N20.45.92.65	E76.61 254
	Total Buldhana Division (PPO)	**240.00**		**547.20**								
i	Fodder Development (PPO WORK)	25	2.28	57.00	Amravati	AKOLA	Patur	Patur	Babhulagaon	387	N.20.29.01.88	E.76.51.47.64
		25	2.28	57.00	Amravati	AKOLA	Patur	Patur	Babhulagaon	387	N.20.28.41.32	E.76.51.39.68
		25	2.28	57.00	Amravati	AKOLA	Alegaon	Malsur	Savargaon	1	N20.379798	E076.727941
		25	2.28	57.00	Amravati	AKOLA	Barshitakali	Barshitakali	Mahan	398	N.20.30.23.00	E.77.10.44.59
		10	2.28	22.80	Amravati	AKOLA	AKOLA	Murtizapur	Mana	B173	N.20.46.31.94	E.77.28.12.61
	Total Akola Division (PPO)	**110**		**250.80**								
	Grand Total Fodder Development in (PPO work)	**500**		**1140.00**								

Works proposed					Location of work						Latlong	
Rule No.	Item of work	Quantity	Rate	Amount (Rs. in Lakhs	Circle	Division	Range	Round	Beat	Compartment No	Latitude	Longitude
1	2	3	4	5	6	7	8	9	10	11	12	13
ii	Fodder Development (PPO Works) (Mission Melghat)	150	1.00	150.00	Amravati	Amravati	Paratwada	Paratwada	Hatighat (E)	412, 413	N21°23'43.50"	E77°31'57.60"
		15	1.00	15.00	Amravati	Melghat T. Dn.	Dharni Range	Patiya	Katkumb	688	N 21 37 30	E 77 01 00
		15	1.00	15.00		Melghat T. Dn.	Susarda	Hirabambai	Rabang	1196	N21'35'54.05"	E076'81'25.15'
		20	1.00	20.00		Melghat T. Dn.	Jarida	Karanj	Khandu	434	N-21 42 36	E-77 23 49
	Total	**200**		**200.00**								
iii	Fodder Development in wadali Range (FYO work in Ha.)	20	1.08	21.60	Amravati	Amravati	Wadali	Wadali	Wadali	79	N212069.13	E789094.82
		20	1.08	21.60	Amravati	Amravati	Morshi	Utakhed	S.Khanapur, Ambada	623	N211638.27	E775510.12
		20	1.08	21.60	Amravati	Amravati	Candur Rly	Malegaon	Mardi	351	N213228.44	E781946.53
		20	1.08	21.60	Amravati	Amravati	Paratwada	Vishroli	Vishroli	442	N21.37317	E77.745078
		25.00	1.08	27.00	Amravati	Amravati	Warud	Warud	Human peth	1093p	N205415.48	E77511.404
		25.00	1.08	27.00	Amravati	Amravati	Morshi	Morshi	Kathapur	719	N20.552649	E77.560722
		130		**140.40**								
iii	Fodder Development (FYO work in Ha.) FYO Plantation& maintenance	25.00	1.08	27.00	Amravati	Buldana	D.Raja	S.Raja	S.raja	564	N19.84571	E76.132139
		25.00	1.08	27.00	Amravati	Buldana	D.Raja	D.Raja	Aland	440	N20.024848	E76.111512
		30.00	1.08	32.40	Amravati	Buldana	Motala	Rajur	West Kothali	482	N20 37 25	E76 19 35
		30.00	1.08	32.40	Amravati	Buldana	Motala	Rohinkhed	Rohinkhed	495	N20.36917	E76.65978
		20.00	1.08	21.60	Amravati	Buldana	Motala	Rohinkhed	Rohinkhed	495	N20.36917	E76.65978
		25.00	1.08	27.00	Amravati	Buldana	Khamgaon	khamgaon	Hivarkhed	475	N20.58 78 13	E76.504132
		25.00	1.08	27.00	Amravati	Buldana	Khamgaon	khamgaon	Mandani	477	N20.35.59	E76.21.41
		25.00	1.08	27.00	Amravati	Buldana	Khamgaon	Ganeshpur	Nirod	459	N20.29.47	E76.33.04
		25.00	1.08	27.00	Amravati	Buldana	Khamgaon	Khamgaon	Chichpur	465	N20.28.18	E76.34.37
		25.00	1.08	27.00	Amravati	Buldana	Khamgaon	Ganeshpur	Nirod	460	N20.30.14	E76.34.09
		25.00	1.08	27.00	Amravati	Buldana	Khamgaon	Lakhanwada	Lakhanwada	467	N20.46.940	E76.587893
		25.00	1.08	27.00	Amravati	Buldana	Khamgaon	Matergaon	Geru	456	N20.58 78 13	E76.504132
		305		**329.40**								

Works proposed					Location of work						Latlong	
Rule No.	**Item of work**	**Quantity**	**Rate**	**Amount (Rs. in Lakhs**	**Circle**	**Division**	**Range**	**Round**	**Beat**	**Compartment No**	**Latitude**	**Longitude**
1	**2**	**3**	**4**	**5**	**6**	**7**	**8**	**9**	**10**	**11**	**12**	**13**
iii	Fodder Development in (FYO work)	20	1.08	21.60	Amravati	Akola	Akola	Akola	Kurum	C No 403		
		20	1.08	21.60	Amravati	Akola	Akola	Akola	Borgaon	C No 390		
		15	1.08	16.20	Amravati	Akola	Patur	Patur	Babhulgaon	C No 387	N20.402139	E76.844528
		30	1.08	32.40	Amravati	Akola	Barshitakali	Pinjar	Sonkhas	C No 397	N.20.33.37	E.077.18.7
		25	1.08	27.00	Amravati	Akola	Alegaon	Alegaon	Pimpaldoli	24	N.202132	E.076.5026
		110		**118.80**								
	Total Fodder Development in (FYO work)	**545.00**		**588.60**								
iv	Fodder Development (SYO Year 2021-22) Area in Ha.	20	0.73	14.60	Amravati	Amravati	Wadali	Pohora	North Choramba	40	N205325.8576	E775250.5668
		20	0.73	14.60	Amravati	Amravati	Candur Rly	Malegaon	Mardi	351	N20.922241	E77.942256
		20	0.73	14.60	Amravati	Amravati	Paratwada	Vishroli	Vishroli	412	N21373.17	E777450.78
		20	0.73	14.60	Amravati	Amravati	Morshi	Shirasgaon	Dabheri	622	N21'01'8678	E77'90'8631
		80		**58.40**	Amravati							
iv	Fodder Development (SYO Year 2021-22) Area in Ha.	30	0.73	21.90	Amravati	Buldana	D.Raja	D.Raja	Andhera	5,41,542	N 20 10 25	E76 13 40
		20	0.73	14.60	Amravati	Buldana	D.Raja	D.Raja	Aland	536	N20 3 54	E76 6 16
		30	0.73	21.90	Amravati	Buldana	D.Raja	S.Raja	Bhosa	559	N19.871854	E76.1804
		30	0.73	21.90	Amravati	Buldana	D.Raja	S.Raja	Sonoshi	589	N19.973768	E76.346905
		30	0.73	21.90	Amravati	Buldana	D.Raja	S.Raja	Palaskhed Chakka	551	N19.974431	E76.17426
		30	0.73	21.90	Amravati	Buldana	D.Raja	S.Raja	Sindkhed Raja	564	N 19 56 38	E76 8 28
		30	0.73	21.90	Amravati	Buldana	D.Raja	D.Raja	Aland	536	N20 4 10	E76 6 51
		200		**146.00**								
	Total Fodder Development (SYO Works)	**280**		**204.40**								
	Total Item No. 5 (2) (C) Silivicultrual Operation in forest	**1525**		**2133.00**								

Works proposed					Location of work						Latlong	
Rule No.	**Item of work**	**Quantity**	**Rate**	**Amount (Rs. in Lakhs**	**Circle**	**Division**	**Range**	**Round**	**Beat**	**Compartment No**	**Latitude**	**Longitude**
1	**2**	**3**	**4**	**5**	**6**	**7**	**8**	**9**	**10**	**11**	**12**	**13**
5(2)(d)	**Protection in Plantation and forest**											
	Encroachment removal & Forest Protection											
i	Encroachment removal & Forest Protection	10.00	0.20	2.00	Amravati	Akola	Patur	Patur/Bodakha/ Malrajura/Chondhi	Karla, Babhugaon, Patur,	Encroachment removal & SMC works	N20.499863 N20˚29'1" N20.485039	E76.991128 E76˚58'47.8" E76.963686
		10.00	0.20	2.00	Amravati	Akola	Akola	All Rounds	Bordi , shanur, loni, borgaon manju, patur nandapur,kurum, mana,kanshivni	Encroachment removal & SMC works	N21044 N205720	E765940 E776227
		10.00	0.20	2.00	Amravati	AKOLA	Barshitakali	All Rounds	Mahan , Paranda, Sonkhas,Pinjar ,Jamkeshwar, Degiri-1, devgiri-2, Sakhrvira, Dhanora, Mandoli	Encroachment removal & SMC works	N203556	E77 830
		10.00	0.20	2.00	Amravati	AKOLA	Alegaon	All Rounds	Alegaon, Pacharan, Shekapur1 and 2, Chikhalwad, Umarwadi 1 and 2, Wasali 1 and 2, Pimpardoli 1 and 2, Pandhurna 1 and 2, Sonuna 1 and 2, Bhaurad, Padsingi 1 and 2, Zarandi, Sawargaon 1 and 2 and 3 and 4,	Encroachment removal & SMC works	N20.393321 N20.323219 N20.356834 N20.391762	E76.814194 E76.783809 E76.814570 E76.790616
	Grand Total Encroachment removal & Forest Protection	**40.00**		**8.00**								

Works proposed					Location of work						Latlong	
Rule No.	**Item of work**	**Quantity**	**Rate**	**Amount (Rs. in Lakhs**	**Circle**	**Division**	**Range**	**Round**	**Beat**	**Compartment No**	**Latitude**	**Longitude**
1	**2**	**3**	**4**	**5**	**6**	**7**	**8**	**9**	**10**	**11**	**12**	**13**
ii	Survey Demarcation & Fencing of Sensitive Forest Areas	20	100000.00	20	Amravati	Akola	Patur	Patur/Bodakha/ Malrajura/Chondhi	Patur, Babhulgaon, Karla, khanapur -1 and 2 , Malrajura 1 and 2, Gondhalwadi, Bodakha 1 and 2 Chinchkhed 1 and 2, Chondhi part 1,2 and 3, Sawarkhed, Andharsangavi.	TCM along the boundary	N20.403478 N20.462145 N20°29.41.2"	E76.91768 E76.891061 E76°58'22.9
		20	100000.00	20	Amravati	Akola	Barshitakali	All Rounds	Mahan , Paranda, Sonkhas,Pinjar ,Jamkeshwar, Degiri-1, devgiri-2,	TCM along the boundary		
		20	100000.00	20	Amravati	Akola	Alegaon	All Rounds	Bordi , shanur, loni, borgaon manju, patur nandapur,kurum, mana,kanshivni	TCM along the boundary	N20.390038 N20.355077 N20.355653 N20.373516	E76.878144 E76.789135 E76.832724 E76.810224
		20	100000.00	20	Amravati	Akola	Akola	All Rounds	Bordi , shanur, loni, borgaon manju, patur nandapur,kurum, mana,kanshivni	TCM along the boundary	N 20.373811	E76.826644
	Total Akola Division Survey Demarcation	**80**		**80.00**								
ii	Fencing	1	16	16.00	Amravati	Amravati	Parawada	paratwada	Wadgoan	369	N21153696	E772143.93
		1	10	10.00	Amravati	Amravati	Wadali	Wadali	S. Wadali	4	N205547.57	E774645.049
	Total Amravati Div. Fencing	**2**		**26.00**								

Works proposed					Location of work						Latlong	
Rule No.	Item of work	Quantity	Rate	Amount (Rs. in Lakhs	Circle	Division	Range	Round	Beat	Compartment No	Latitude	Longitude
1	2	3	4	5	6	7	8	9	10	11	12	13
iii	Boundary Pillar Cass I	50	0.08	4.00	Amravati	Amravati	Wadali	Wadali	S. Wadali	4	N205547.57	E774645.049
		50	0.08	4.00	Amravati	Amravati	Parawada	paratwada	Wadgoan	368	N211865.36	E778305.31
		50	0.08	4.00	Amravati	Amravati	Morshi	Tiwasa	Satargaon	NA	N212069.13	E789094.82
		100	0.08	8.00	Amravati	Akola	Patur	Patur/Bodakha/ Malrajura/Chondhi			N 20.499863 N20°29'1" N 20.485039	E 76.991128 E76°58'47.8"
		100	0.08	8.00	Amravati	AKOLA	AKOLA	All Rounds	Bordi , shanur, loni, borgaon manju, patur nandapur,kurum,	b11,12,13,14,15,16,17,18,19, 20,21,,22,23,24,25,26,27,-38,C-3,379,	N 21044 N 205720N	E 765940 E 776227
		100	0.08	8.00	Amravati	AKOLA	Barshitakli	All Rounds	Mahan , Paranda, Sonkhas,Pinjar ,Jamkeshwar, Degiri-1, devgiri-2, Sakhrvira, Dhanora, Mandoli	128-A,707, 129A,127,130 ,	N203556	E 77 830
vii	Boundary Pillar Cass I	100	0.08	8.00	Amravati	Akola	Alegaon	Alegaon/Pimpardoli/Malsur/Chikhalwad	Alegaon, Pacharan, Shekapur1 and 2, Chikhalwad, Umarwadi 1 and 2, Wasali 1 and 2, Pimpardoli 1 and 2, Pandhurna 1 and 2, Sonuna 1 and 2, Bhaurad, Padsingi 1 and 2, Zarandi, Sawargaon 1 and 2 and 3 and 4,	17,1 8, C162, 58 ,59, 60, C201, 703, 20, 21, 22, 13, 14, 19, 7, 6, 12, 23, 24, C206, 25, 704, 33, 34, 26, 27, 28, C202, C203, 29, 30, 31, 32, 10, 11, 15, 16, 5, 8, 9, 1, 2, 3, 4, C204, C205	N20.375309 N20.338469 N20.319645 N20.371013	E76.882378 E76.761973 E76.825444 E76.761498

Works proposed					Location of work						Latlong	
Rule No.	Item of work	Quantity	Rate	Amount (Rs. in Lakhs	Circle	Division	Range	Round	Beat	Compartment No	Latitude	Longitude
1	2	3	4	5	6	7	8	9	10	11	12	13
	Total Amravati Boundary Pillar Cass I	**550**		**44.00**								
iv	Boundary Pillar Cass II	50	0.04	2.00	Amravati	Amravati	Wadali	Wadali	S. Wadali	4	N205547.57	E774645.049
		50	0.04	2.00	Amravati	Amravati	Parawada	paratwada	Wadgoan	368	N21325.2	E777394.84
		50	0.04	2.00	Amravati	Amravati	Morshi	Tiwasa	Satargaon	NA	N212069.13	E789094.82
		100	0.04	4.00	Amravati	Akola	Patur	Patur/Bodakha/ Malrajura/Chondhi	Bordi , shanur, loni, borgaon manju, patur nandapur,kurum, mana,kanshivni	b11,12,13,14,15,16,17,18,19, 20,21,,22,23,24,25,26,27,-38,C-3,379,	N 20.403478 N 20.462145 N20°29.41.2"	E 76.91768 E 76.891061 E76°58'22.9
		100	0.04	4.00	Amravati	AKOLA	Akola	All Rounds	Bordi , shanur, loni, borgaon manju, patur nandapur,kurum, mana,kanshivni	b11,12,13,14,15,16,17,18,19, 20,21,,22,23,24,25,26,27,-38,C-3,379,	N 21044 N 205720	E 765940 E 776227
		100	0.04	4.00	Amravati	AKOLA	Barshitakli	All Rounds	Mahan , Paranda, Sonkhas,Pinjar ,Jamkeshwar, Degiri-1, devgiri-2,	128-A,707, 129A,127,130 ,	N203556	E 77 830
		100	0.04	4.00	Amravati	Akola	Alegaon	Alegaon/Pimpardoli/Malsur/Chikhalwad	Alegaon, Pacharan, Shekapur1 and 2, Chikhalwad, Umarwadi 1 and 2, Wasali 1 and 2, Pimpardoli 1 and 2, Pandhurna 1 and 2, Sonuna	17,1 8, C162, 58 ,59, 60, C201, 703, 20, 21, 22, 13, 14, 19, 7, 6, 12, 23, 24, C206, 25, 704, 33, 34, 26, 27, 28, C202, C203, 29, 30, 31, 32, 10, 11, 15, 16, 5, 8, 9, 1, 2, 3,	N20.372984 N20.331333 N20.309501 N20.358292	E76.883239 E76.753071 E76.827463 E76.718788
	Total Boundary Pillar Cass II	**550**		**22.00**								

Works proposed					Location of work						Latlong	
Rule No.	**Item of work**	**Quantity**	**Rate**	**Amount (Rs. in Lakhs**	**Circle**	**Division**	**Range**	**Round**	**Beat**	**Compartment No**	**Latitude**	**Longitude**
1	**2**	**3**	**4**	**5**	**6**	**7**	**8**	**9**	**10**	**11**	**12**	**13**
v	**Construction, up gradation and maintenance of Protection camps/Protection Huts/ Forest Custody etc./Labour Shed etc.**											
a	Protection Huts	1	20.00	20.00	Amravati	Amravati	Morshi	Morshi	Naya Wathoda	NA	N21.248861	E78.051324
		1	20.00	20.00	Amravati	Amravati	wadali	Wadali	S. Wadali	4	N205547.57	E774645.049
		1	20.00	20.00	Amravati	Amravati	Chandur Rly	Chirodi	C. Chirodi	298	N205308.592	E775652.542
		1	20.00	20.00	Amravati	Amravati	Paratwada	Shirajgaon	Chichkumbha	NA	N205714.85	E78637.29
	Total Amravati Division	**4**		**80.00**								
a	Protection Camp	1	20	20.00	Amravati	Buldana	Motala	Rajur	West khairkhed	328	N20.3420	E76.1102
		1	20	20.00	Amravati	Buldana	Motala	Rohinkhed	Dabha	336	N20.3432	E76.0628
	Total Buldhana Division	**2**		**40.00**								
b	Forest Custody	1	23.00	23.00	Amravati	Akola	Patur	Patur	Patur	Patur Gaothan	N20.45523	E 76.941562
	Total Akola Division	**1**		**23.00**								
c	Const. of Labour shed	1	6.00	6.00	Amravati	Amravati	Warud	Pusla	Pusla	1088	N21.468517	E78.275911
		1	6.00	6.00	Amravati	Amravati	Paratwada,	Paratwada	Paratwada	712	N212206.33	E774713.55
		1	6.00	6.00	Amravati	Amravati	Warud	Pusla	Pusla	1085p		
		1	6.00	6.00	Amravati	Amravati	Chandur Rly	Chandur Rly	Chandur Rly	142	N20.952645	E77.524581
	Total Amravati Division	**4**		**24.00**								
c	Const. of Labour shed	1	6.00	6.00	Amravati	Akola	Patur	Patur	babhulgaon	387	N 20.495343	E 76.869394
		1	6.00	6.00	Amravati	Akola	Patur	Chondhi	Sawarkhed	Comp No-56	N 20°21'09.29	E76°53'59.10
		1	6.00	6.00	Amravati	Akola	Barshitakali	Dhaba	Dhaba		N.20.47.17.42	E.77.01.36
	Total Akola Division	**3**		**18.00**								

Works proposed					Location of work						Latlong	
Rule No.	**Item of work**	**Quantity**	**Rate**	**Amount (Rs. in Lakhs**	**Circle**	**Division**	**Range**	**Round**	**Beat**	**Compartment No**	**Latitude**	**Longitude**
1	**2**	**3**	**4**	**5**	**6**	**7**	**8**	**9**	**10**	**11**	**12**	**13**
	Total construction, up gradation and maintenance of Protection camps/Protection Huts/ Forest Custody etc./Labour Shed etc.	**5**		**185.00**								
viii	Establishment and maintenance of wireless networks (Mission Melghat)	1	2.50	2.50	Amravati	Melghat T. Dn.	Dharni	Bairagad , Patiya, Dharni	Bairagad , Bhodilawa, Patiya, Dharni	Control room at Revenue area	N 21 41 07"	E 077 03 41
		1	2.50	2.50	Amravati	Melghat T. Dn.	Susarda	Baratanda	Sawlikheda	1225	N21'20.26"	E076'38.16"
		1	2.50	2.50	Amravati	Melghat T. Dn.	Jarida	Butida	Butida	318	N-21.639028	E-77.484043
		1	2.50	2.50	Amravati	Melghat T. Dn.	Ghatang	Bihali	Bihali	64	N 21,39,9722	E 77, 45,9255
		4.00		**10.00**								
vii	improving mobility of frontline staff by Forest protection & patrolling	LS		2.00	Amravati	Amravati						
		LS		2.00	Amravati	Melghat						
		LS		2.00	Amravati	Buldana						
		LS		2.00	Amravati	Akola						
	Total improving mobility of frontline staff by Forest protection & patrolling	0		**8.00**								
Total . Item No. 5 (2) d Protection in Plantation and forest		**1223.00**		**383.00**								
5(2) (f)	**Forest fire preventation and control operation**			7.03								
i	Cutting and burning of fire lines	18	0.03	0.54	Amravati	M.T.D Partwada	Anjangaon	Popatkhed	Popatkhed	C.No.973,974, 1022,1023	N21 15`16"	E77 06`51"
		45	0.02	0.90	Amravati	M.T.D Partwada	Anjangaon	Popatkhed	East Menghat	C.No. 1027,1028,102	N21 22`32"	E77 13`95"
		400	0.014	5.60	Amravati	M.T.D Partwada	Anjangaon	Popatkhed	Ziri	C.No. 959,960,961,9	N21 12`27"	E77 11`79"
					Amravati	M.T.D Partwada	Anjangaon	Popatkhed	Menghat	C.No. 1024.1025,102	N21 19`22"	E77 16`18"
					Amravati	M.T.D Partwada	Anjangaon	Sawarpani	Sawarpani	C.No.1065,106 6	N21 12`11	E77 17`32"
					Amravati	M.T.D Partwada	Anjangaon	Sawarpani	Khirkund	C.No.1045,104 6,1064	N21 13`39	E77 17`25"
					Amravati	M.T.D Partwada	Anjangaon	Sawarpani	Chinchona	Sur No. - 5,6,7,8	N21 18`26	E77 17`23"

Works proposed					Location of work						Latlong	
Rule No.	**Item of work**	**Quantity**	**Rate**	**Amount (Rs. in Lakhs**	**Circle**	**Division**	**Range**	**Round**	**Beat**	**Compartment No**	**Latitude**	**Longitude**
1	**2**	**3**	**4**	**5**	**6**	**7**	**8**	**9**	**10**	**11**	**12**	**13**
i	Cutting and burning of fire lines				Amravati	M.T.D Partwada	Anjangaon	Sawarpani	Shivanpani	C.No.1042,1044	N21 11`28	E77 15`25”
					Amravati	M.T.D Partwada	Anjangaon	Dahigaon	Kakadari	C.No. 1060,1061,106	N21 14`27”	E77 12`19”
					Amravati	M.T.D Partwada	Anjangaon	Dahigaon	Garajdari	C.No.1068,1070	N21 16`27”	E77 19`21”
					Amravati	M.T.D Partwada	Anjangaon	Dahigaon	Khirpani	C.No.1062,1067	N21 14`23”	E77 12`17”
					Amravati	M.T.D Partwada	Anjangaon	Dahigaon	Sitanani	C.No.1047,1063	N21 13`22”	E77 15`19”
					Amravati	M.T.D Partwada	Anjangaon	Dahigaon	Chandsuraj	C.No. 1048,1049	N21 18`27”	E77 111`17”
					Amravati	M.T.D Partwada	Anjangaon	Tembrusonda	Tembrusonda	C.No.1055,1056,1058	N21 18`45”	E77 16`34”
					Amravati	M.T.D Partwada	Anjangaon	Tembrusonda	Girguti	C.No. 1041,1050,105	N21 16`37”	E77 14`47”
					Amravati	M.T.D Partwada	Anjangaon	Tembrusonda	Ambapati	C.No.1052,1053,1054	N21 11`54”	E77 17`42”
					Amravati	M.T.D Partwada	Anjangaon	Tembrusonda	Satti	C.No. 1057,1059,	N21 19`52”	E77 15`35”
					Amravati	M.T.D Partwada	Anjangaon	Tembrusonda	Chouryamal	C.No. 1055,1056,105	N21 17`36”	E77 14`41”
					Amravati	M.T.D Partwada	Anjangaon	Pandrakhadak	Pandrakhadak	C.No. 1034,1035,103	N21 19`41”	E77 09`25”
					Amravati	M.T.D Partwada	Anjangaon	Pandrakhadak	Dhorba	C.No. 1037,1038,103	N21 11`38”	E77 16`43”
					Amravati	M.T.D Partwada	Anjangaon	Pandrakhadak	Vastapur	C.No.1030,1031,1032	N21 18`31”	E77 09`44”
					Amravati	M.T.D Partwada	Anjangaon	Pandrakhadak	Ballakheda	C.No. 1033,1043	N21 17`33”	E77 13`25”
	Total Melghat Division Paratwada	**463**		**7.04**								
i	Cutting and burning of fire lines	49	0.01743	0.85	Amravati	Akola	Patur	Patur/Bodakha/ Malrajura/Chondhi		Fire Line	N20.384439	E76.948382
		25	0.01743	0.44	Amravati	Akola	Akola	All Rounds		Fire Line	N 21044 N 205720	E765940 E776227
		163	0.01743	2.84	Amravati	Akola	Barshitakli	All Rounds		Fire Line	N203556	E 77 830
		36	0.01743	0.63	Amravati	Akola	Alegaon	Alegaon / malsur / Pimpardoli / Chikhalwad		Fire Line	N20.385702 N20.379966 N20.339954 N20.279465	E76.817338 E76.723856 E76.770617 E76.839697
	Total Akola Division	273		4.76								
	Total Cutting and burning of fire lines	**736**		**11.80**								

Works proposed					Location of work						Latlong	
Rule No.	**Item of work**	**Quantity**	**Rate**	**Amount (Rs. in Lakhs**	**Circle**	**Division**	**Range**	**Round**	**Beat**	**Compartment No**	**Latitude**	**Longitude**
1	**2**	**3**	**4**	**5**	**6**	**7**	**8**	**9**	**10**	**11**	**12**	**13**
ii	Fire watchers (each range @20 labour)	20	0.10793	2.16	Amravati	Akola	Patur	Patur/Bodakha/ Malrajura/Chondhi		Fire watcher	N20.414331	E76.944699
		20	0.10793	2.16	Amravati	Akola	Akola	All Rounds		Fire watcher	N21044 N205720	E765940 E776227
		20	0.10793	2.16	Amravati	Akola	Barshitakli	All Rounds		Fire watcher	N203556	E 77 830
		20	0.10793	2.16	Amravati	Akola	Alegaon	Alegaon / malsur / Pimpardoli / Chikhalwad		Fire watcher	N20.385702 N20.379966 N20.339954 N20.279465	E76.817338 E76.723856 E76.770617 E76.839697
	Total Fire Watchers	**80**		**8.63**								
Total Item No. 5 (2) F Forest fire preventation and control operation				**20.43**								
5(2) g	**Soil and Moisture conservation works in the forest**											
i	Construction of Gabian Bandhara	40	0.50	20.00	Amravati	Amravati	Paratwada	Shirajgoan	Chichkumbha	427	N215064.36	E774552.24
		5	0.50	2.50	Amravati	Amravati	Morshi	Tiwasa	Tiwasa	906	N210530	E780117.8
		5	0.50	2.50	Amravati	Amravati	Warud	Pusla	Dhanodi	1101	N213030	E782030
	Total Amravati Division	**50**		**25.00**								
i	Gabian Bandhara	1	0.50	0.50	Amravati	Buldana	Buldhana	Gummi	Jamthi	345	N20.490102	E76.026866
		2	0.50	1.00	Amravati	Buldana	Buldhana	Gummi	Gummi	344B	N20.516853	E76.965103
		1	0.50	0.50	Amravati	Buldana	Buldhana	Gummi	Dhalsawngi	346	N20.419841	E76.054595
		1	0.50	0.50	Amravati	Buldana	Buldhana	Gummi	P.Sarai	347	N20.222060	E76.055102
		1	0.50	0.50	Amravati	Buldana	Khamgaon	Ganeshpur	Wazar	471	N20 53 96	E76 49 61
		1	0.50	0.50	Amravati	Buldana	Khamgaon	Ganeshpur	Nirod	459	N20 28 40	E76 34 21
		1	0.50	0.50	Amravati	Buldana	Khamgaon	Ganeshpur	Ganeshpur	644	N20 31 02	E76 29 48
		1	0.50	0.50	Amravati	Buldana	Khamgaon	Ganeshpur	Ganeshpur	470	N20 30 26	E76 32 02
		1	0.50	0.50	Amravati	Buldana	Khamgaon	Ganeshpur	Ganeshpur	469	N20 29 79	E76 29 87
		1	0.50	0.50	Amravati	Buldana	Khamgaon	Khamgaon	Divthana	479	N20.588942	E76.466304
		1	0.50	0.50	Amravati	Buldana	Motala	Rajur	Rajur	493	N20.3615	E76.1154
		1	0.50	0.50	Amravati	Buldana	Motala	Rajur	Rajur	493	N20.3617	E76.1149
		1	0.50	0.50	Amravati	Buldana	Motala	Rajur	Rajur	493	N20.3623	E76.1144
		1	0.50	0.50	Amravati	Buldana	Motala	Rajur	Rajur	493	N20.3629	E76.1136
		1	0.50	0.50	Amravati	Buldana	Motala	Rajur	Rajur	493	N20.3620	E76.1135
		1	0.50	0.50	Amravati	Buldana	Motala	Rajur	Rajur	493	N20.3616	E76.1130
		1	0.50	0.50	Amravati	Buldana	Motala	Rajur	Rajur	493	N203618	E76.1122

Works proposed					Location of work						Latlong	
Rule No.	Item of work	Quantity	Rate	Amount (Rs. in Lakhs	Circle	Division	Range	Round	Beat	Compartment No	Latitude	Longitude
1	2	3	4	5	6	7	8	9	10	11	12	13
i	Gabian Bandhara	1	0.50	0.50	Amravati	Buldana	Motala	Rajur	Rajur	493	N20.3612	E76.1113
		1	0.50	0.50	Amravati	Buldana	Motala	Rajur	Rajur	493	N20.3621	E76.1110
		1	0.50	0.50	Amravati	Buldana	Motala	Rajur	Khamkhed	335	N20.3617	E76.1154
		1	0.50	0.50	Amravati	Buldana	Motala	Rajur	Khamkhed	335	N20.3617	E76.1154
		1	0.50	0.50	Amravati	Buldana	Motala	Rajur	Khamkhed	335	N20.3617	E76.1154
		1	0.50	0.50	Amravati	Buldana	Motala	Rajur	Khamkhed	335	N20.3623	E76.1144
		1	0.50	0.50	Amravati	Buldana	Motala	Rajur	Khamkhed	335	N20.3628	E76.1134
		1	0.50	0.50	Amravati	Buldana	Motala	Rajur	Khamkhed	335	N20.3626	E76.1136
		1	0.50	0.50	Amravati	Buldana	Motala	Rajur	Khamkhed	335	N20.3616	E76.1130
		1	0.50	0.50	Amravati	Buldana	Motala	Rajur	Khamkhed	335	N20.3614	E76.1123
		1	0.50	0.50	Amravati	Buldana	Motala	Rajur	Khamkhed	335	N20.3610	E76.1113
		1	0.50	0.50	Amravati	Buldana	Motala	Rajur	Est Kothali	488	N20.370	E76.1837
		1	0.50	0.50	Amravati	Buldana	Motala	Rajur	Est Kothali	488	N20.3632	E76.114
		1	0.50	0.50	Amravati	Buldana	Motala	Rajur	Est Kothali	488	N20.3632	E76.114
		1	0.50	0.50	Amravati	Buldana	Motala	Rajur	Est Kothali	488	N20.3632	E76.114
		1	0.50	0.50	Amravati	Buldana	Motala	Rajur	Est Kothali	488	N20.3632	E76.114
		1	0.50	0.50	Amravati	Buldana	Motala	Rajur	Est Kothali	488	N20.3632	E76.114
		1	0.50	0.50	Amravati	Buldana	Motala	Rajur	Est Kothali	488	N20.3632	E76.114
		1	0.50	0.50	Amravati	Buldana	Motala	Rajur	Est Kothali	488	N20.3632	E76.114
		1	0.50	0.50	Amravati	Buldana	Motala	Rajur	Est Kothali	488	N20.3632	E76.114
		1	0.50	0.50	Amravati	Buldana	Motala	Motala	Chichkhednath	506	N20.3939	E76.2130
		1	0.50	0.50	Amravati	Buldana	Motala	Motala	Chichkhednath	506	N20.3946	E76.2142
		1	0.50	0.50	Amravati	Buldana	Motala	Rohinkhed	Rohinkhed	495	N20.3910	E76.0645
		1	0.50	0.50	Amravati	Buldana	Motala	Rohinkhed	Rohinkhed	495	NN20.3905	E76.0648
		1	0.50	0.50	Amravati	Buldana	Motala	Rohinkhed	Rohinkhed	495	N20.3899	E76.0654
		1	0.50	0.50	Amravati	Buldana	Motala	Rohinkhed	Rohinkhed	495	N20.3912	E76.0642
		1	0.50	0.50	Amravati	Buldana	Motala	Rohinkhed	Rohinkhed	495	N20.3902	E76.0653
		1	0.50	0.50	Amravati	Buldana	Motala	Rohinkhed	Rohinkhed	495	N20.3914	E76.0700
		1	0.50	0.50	Amravati	Buldana	Motala	Rohinkhed	Rohinkhed	495	N20.3919	E76.0710
		1	0.50	0.50	Amravati	Buldana	Motala	Rohinkhed	Rohinkhed	495	N20.3917	E76.0705
		1	0.50	0.50	Amravati	Buldana	Motala	Rohinkhed	Rohinkhed	495	N20.3905	E76.0658
		1	0.50	0.50	Amravati	Buldana	Motala	Rohinkhed	Rohinkhed	495	N20.3909	E76.0600
	Total Buldhana Division Gabian Bandhara	**50**		**25.00**								

Works proposed					Location of work						Latlong	
Rule No.	Item of work	Quantity	Rate	Amount (Rs. in Lakhs	Circle	Division	Range	Round	Beat	Compartment No	Latitude	Longitude
1	2	3	4	5	6	7	8	9	10	11	12	13
ii	Construction of Gabiyan Bandhara (Mission Melghat)	109	0.40	43.60	Amravati	Amravati	Paratwada	Paratwada	Hatighat (E)	4,12,413	N21˚23'43.01"	E77˚31'51.31"
		5	0.4	2.00	Amravati	Melghat T. Dn.	Dharni Range	Patiya	patiya	688	21°37'43.50"N	77° 1'18.44"E
		5	0.4	2.00	Amravati	Melghat T. Dn.	Dharni Range	Bairagad	utter padidum	677	21°39'49.73"N	77° 1'47.82"E
		5	0.4	2.00	Amravati	Melghat T. Dn.	Dharni Range	Chitri	Kotha	1284	21°31'6.09"N	77° 3'47.10"E
		2	0.4	0.80	Amravati	Melghat T. Dn.	Dharni Range	Chitri	Kotha	1288	21°29'17.23"N	77° 3'30.37"E
		6	0.4	2.40	Amravati	Melghat T. Dn.	Dharni Range	Bod	Lawada	1283	21°32'19.22"N	77° 2'34.22"E
		20	0.4	8.00	Amravati	Melghat T. Dn.	Susarda	Susarda	Retya	1185	N21'21'47.26"	E076'44'15.15"
		5	0.4	2.00	Amravati	Melghat T. Dn.	Jarida	Khari	Biba	366	N-21 71 009	E-77 47 997
		5	0.4	2.00	Amravati	Melghat T. Dn.	Jarida	Khari	Biba	367	N-21 70 692	E-077 46 87
		5	0.4	2.00	Amravati	Melghat T. Dn.	Jarida	Khari	Biba	368	N-21 71 003	E-077 46 002
		5	0.4	2.00	Amravati	Melghat T. Dn.	Jarida	Khari	Hilda	371	N-21 72 3023	E-77 45 1177
		3	0.4	1.20	Amravati	Melghat T. Dn.	Ghatang	Dhamangaon	Aadnadi	7	N 21,39,45.62	E 77, 43,02.38
		3	0.4	1.20	Amravati	Melghat T. Dn.	Ghatang	Dhamangaon	Chichati	18	N 21,21,39.49	E 77,23,45.45
		3	0.4	1.20	Amravati	Melghat T. Dn.	Ghatang	Bihali	Bihali	1	N 21,38,57.19	E 77,47,86.22
		3	0.4	1.20	Amravati	Melghat T. Dn.	Ghatang	Bihali	Bhulori	68	N 21,26,02.79	E 77,27,56.45
		3	0.4	1.20	Amravati	Melghat T. Dn.	Ghatang	Bihali	Bhulori	69	N 21,27,01.80	E 77,27,55.82
		9	0.4	3.60	Amravati	Melghat T. Dn.	Anjangaon	Pandrakhadak	Pandrakhadak	1034	N 21 15 27	E77 10 08
		5	0.4	2.00	Amravati	Melghat T. Dn.	Anjangaon	Popatkhed	Mengaht	1026	N 21 13 44	E077 07 53
		5	0.4	2.00	Amravati	Melghat T. Dn.	Anjangaon	Pandrakhadak	Ballakheda	1033	N 21 14 47	E77 10 16
		3	0.4	1.20	Amravati	Melghat T. Dn.	Anjangaon	Popatkhed	East Menghat	1027	N 21 23 55	E77 14 25
		209		**83.60**								
	Total Gabian Bandhara	**309.00**		**133.60**								

Works proposed					Location of work						Latlong	
Rule No.	**Item of work**	**Quantity**	**Rate**	**Amount (Rs. in Lakhs**	**Circle**	**Division**	**Range**	**Round**	**Beat**	**Compartment No**	**Latitude**	**Longitude**
1	**2**	**3**	**4**	**5**	**6**	**7**	**8**	**9**	**10**	**11**	**12**	**13**
iv	Construction of Cement Bandhare (Mission Melghat)	10	10.00	100.00	Amravati	Amravati	Paratwada	Paratwada	Hatighat (E)	4,12,413	N21°23'10.04"	E77°31'46.69"
		2	10.00	20.00	Amravati	Melghat T. Dn.	Dharni Range	Chitri	Chitri	731	N 21 53 72	E 77 06 32
		1	10.00	10.00	Amravati	Melghat T. Dn.	Dharni Range	Bod	Lawada	1283	N 21 33 30	E 77 02 46
		1	10.00	10.00	Amravati	Melghat T. Dn.	Susarda	Susarda	Retya	1185	N21'21'41"	E076'44'40"
		2	10.00	20.00	Amravati	Melghat T. Dn.	Susarda	Kasmar	Kawadaziri	1208	N21'23'6"	E076'55'6"
		1	10.00	10.00	Amravati	Melghat T. Dn.	Ghatang	Ghatang	Salona	11	N 21,25,13	E 77, 24, 41
		2	10.00	20.00	Amravati	Melghat T. Dn.	Anjangaon	Pandrakhadak	Ballakheda	1043	N 21 14 44	E77 10 41
		1	10.00	10.00	Amravati	Melghat T. Dn.	Anjangaon	Pandrakhadak	Ballakheda	1033	N 21 14 42	E77 10 16
		20		**200.00**								
v	Check damp	2	0.45	0.90	Amravati	Buldana	Motala	Rohinkhed	Rohinkhed	495	N20.3916	E76.0601
		2	0.45	0.90	Amravati	Buldana	Motala	Rajur	Rajur	493	N20.3605	E76.1154
		2	0.45	0.90	Amravati	Buldana	Motala	Motala	Chichkhednath	506	N20.3927	E76.2133
		2	0.45	0.90	Amravati	Buldana	Motala	Rajur	Est Kothali	488	N20.3632	E76.1142
		2	0.45	0.90	Amravati	Buldana	Motala	Rajur	Khamkhed	335	N20.3605	E76.1154
	Total Buldhana Division Check Damp	**10**		**4.50**								
vi	Construction of Vantale	3	3.00	9.00	Amravati	Amravati	Paratwada	Shirajgaon	Chichkumbha	427	N205017.888	E775304.502
		2	3.00	6.00	Amravati	Amravati	Chandur Rly	Chndur Rly	Kurha	242	N21254928	E77424829
	Total Amravati Division	**5**		**15.00**								

Works proposed					Location of work						Latlong	
Rule No.	Item of work	Quantity	Rate	Amount (Rs. in Lakhs	Circle	Division	Range	Round	Beat	Compartment No	Latitude	Longitude
1	2	3	4	5	6	7	8	9	10	11	12	13
vi	Construction of Vatale	1	3.00	3.00	Amravati	Buldana	D.Raja	S.Raja	Sawargaon	572	N19.52918	E76.05198
		1	3.00	3.00	Amravati	Buldana	D.Raja	D.Raja	D.Raja-1	533	N19.996758	E76.05589
		1	3.00	3.00	Amravati	Buldana	D.Raja	D.Raja	D.Raja-2	533	N19.990557	E76.06509
		1	3.00	3.00	Amravati	Buldana	D.Raja	D.Raja	D.Raja-3	533	N19.972212	E76.0576
		1	3.00	3.00	Amravati	Buldana	D.Raja	D.Raja	D.Raja	539	N19.99254	E76.04674
		1	3.00	3.00	Amravati	Buldana	Mehkar	Lonar	Lonar	575	N19 55 17	E76 35 33
		1	3.00	3.00	Amravati	Buldana	Mehkar	Lonar	Bibi	599	N20 01 57	E76 23 59
		1	3.00	3.00	Amravati	Buldana	Mehkar	Lonar	Bibi	597	N20 06 29	E76 21 11
		1	3.00	3.00	Amravati	Buldana	Motala	Motala	Chinchkhed	505	N20 39 02	E76 20 55
		1	3.00	3.00	Amravati	Buldana	Buldana	Gummi	Jamthi	345	N20.470964	E76.026573
		1	3.00	3.00	Amravati	Buldana	Buldana	Gummi	Dhalsawngi	346	N20.420112	E76.055472
		1	3.00	3.00	Amravati	Buldana	Buldana	Gummi	P.Sarai	347	N20.223126	E76.066452
		1	3.00	3.00	Amravati	Buldana	Khamgaon	Gaeshpur	Wazar	471	N20 49 77	E76 48 41
		1	3.00	3.00	Amravati	Buldana	Khamgaon	Gaeshpur	Ganeshpur	644	N20 30 50	E76 29 30
		1	3.00	3.00	Amravati	Buldana	Khamgaon	Khamgaon W	Divthana	478	N20 59.780	E76 46.5559
		1	3.00	3.00	Amravati	Buldana	Khamgaon	Khamgaon W	Januna	474	N20 55.6154	E76.737
		1	3.00	3.00	Amravati	Buldana	Motala	Rajur	Rajur	493	N20.3617	E76.1147
		1	3.00	3.00	Amravati	Buldana	Motala	Rajur	Est Kothali	488	N20.3848	E76.18231
		1	3.00	3.00	Amravati	Buldana	Motala	Motala	Chinchkhed	506	N20.4015	E76.2153
		1	3.00	3.00	Amravati	Buldana	Motala	Rohinkhed	Rohinkhed	495	N20.3617	E76.1147
	Total Buldhana division Vantale	**20**		**60.00**								
	Total Vantale	**25**		**75.00**								

Works proposed					Location of work						Latlong	
Rule No.	Item of work	Quantity	Rate	Amount (Rs. in Lakhs	Circle	Division	Range	Round	Beat	Compartment No	Latitude	Longitude
1	2	3	4	5	6	7	8	9	10	11	12	13
vii	Deep CCT	25		30.00	Amravati	Amravati	Paratwada	Shirajgoan	Chichkumbha	430, 431, 432	N205714.855	E78637.293
	Total Amravati Division	**25**		**30.00**								
vii	Deep CCT	25	0.3895	9.74	Amravati	M.T.D. Paratwada	Susarda	Susrda	Rethya	1185	N21°21'53"	E 76°44'29"
		25	0.3895	9.74	Amravati	M.T.D. Paratwada	Susarda	Baratanda	Temrukheda	1226	N21°20'60"	E76°38,48"
		25	0.3895	9.74	Amravati	M.T.D. Paratwada	Susarda	Baratanda	Temrukheda	1227	N21°20'12"	E76°39'24"
		20	0.3895	7.79	Amravati	M.T.D. Paratwada	Susarda	Kasmar	Dhodra	1165	N 21°22'17"	E76°54'4"
		20	0.3895	7.79	Amravati	M.T.D. Paratwada	Susarda	Kasmar	Kawadazari	1206	N 21°39'02.2"	E76°91'02.75"
		20	0.3895	7.79	Amravati	M.T.D. Paratwada	Susarda	Bibamal	S. Bibamal	1194	N21°39'67.58"	E76°83'45.46"
		20	0.3895	7.79	Amravati	M.T.D. Paratwada	Susarda	Bibamal	Bibamal	1200	N21°40'73.81"	E 76°83'72.91"
		20	0.3895	7.79	Amravati	M.T.D. Paratwada	Susarda	Bibamal	Goulandoh	1306	N21°25'41"	E76°47'13"
	Total Melghat (T) Division Paratwada	**175**		**68.16**								
	Total Deep CCT	**200**		**98.16**								
viii	Earthan/Mati nala Bumds	1	3.00	3.00	Amravati	Buldana	Mehkar	Lonar	Bibi	599	N20 02 03	E76 23 59
		1	3.00	3.00	Amravati	Buldana	Mehkar	Lonar	Bibi	596	N20 06 01	E76 20 17
		1	3.00	3.00	Amravati	Buldana	Ghatbori	Mandwa	Mandwa	195A	N21 24.22	E76 38.1846
		1	3.00	3.00	Amravati	Buldana	Ghatbori	Mandwa	Mandwa	195A	N20 40.619	E76 64.006
		1	3.00	3.00	Amravati	Buldana	Ghatbori	Mandwa	Pachdeola	192A	N20 38.618	E76 66.271
		1	3.00	3.00	Amravati	Buldana	Ghatbori	Mandwa	Wadali	196A	N20 21.32	E76 34.42
		1	3.00	3.00	Amravati	Buldana	Ghatbori	Mandwa	Mohna	206	N20 43.049	E76. 60.618
		1	3.00	3.00	Amravati	Buldana	Ghatbori	Mandwa	Warwand	194	N20 38.804	E76.64732
		1	3.00	3.00	Amravati	Buldana	Motala	Motala	Chinchkhed	508	N20 39 56	E76 20 33
		1	3.00	3.00	Amravati	Buldana	Khamgaon	Gaeshpur	Wazar	472	N20 49 45	E76 51 14
		1	3.00	3.00	Amravati	Buldana	Khamgaon	Khamgan	Januna	474	N20.556154	E76.737
		1	3.00	3.00	Amravati	Buldana	Khamgaon	Khamgan	Divthana	478	N20 59.0401	E76.46.2991
		1	3.00	3.00	Amravati	Buldana	Motala	Rajur	Rajur	493	N20.3619	E76.1149
		1	3.00	3.00	Amravati	Buldana	Motala	Rajur	Est Kothali	488	N20.3848	E76.182
		1	3.00	3.00	Amravati	Buldana	Motala	Rohinkhed	Rohinkhed	495	N20.390976	E76.064497
	Total Buldhana Division	**15**		**45.00**								

Works proposed					Location of work						Latlong	
Rule No.	**Item of work**	**Quantity**	**Rate**	**Amount (Rs. in Lakhs**	**Circle**	**Division**	**Range**	**Round**	**Beat**	**Compartment No**	**Latitude**	**Longitude**
1	**2**	**3**	**4**	**5**	**6**	**7**	**8**	**9**	**10**	**11**	**12**	**13**
viii	MNB	1	3.00	3.00	Amravati	Akola	Barshitakali	Pinjar	Pinjar	396	N20.32.16	E77.17.36
		1	3.00	3.00	Amravati	Akola	Barshitakali	Barshitakali	Mahan	398	N 20.50.46.95	E77.14.25.84
	Total Akola Division	**2**		**6.00**								
	Total Earthan/Mati nala Bumds	**17**		**51.00**								
ix	Construction of LBS Structure (Mission Melghat)	100	0.18	18.00	Amravati	Amravati	Paratwada	Paratwada	Hatighat (W)	4,07,408	N21°23'49.36"	E77°31'52.13"
		6	0.18	1.08	Amravati	Melghat T. Dn.	Dharni Range	Patiya	patiya	688	21°37'46.15"N	77° 1'21.07"E
		6	0.18	1.08		Melghat T. Dn.	Dharni Range	Bairagad	Utter padidum	681	N 21 39 38	E 77 01 30
		6	0.18	1.08		Melghat T. Dn.	Dharni Range	chitri	chitri	731	N 2153 69	E 77 06 45
		6	0.18	1.08		Melghat T. Dn.	Dharni Range	Bod	Lawada	1283	N 21 22 06	E 77 02 52
		10	0.18	1.80		Melghat T. Dn.	Susarda	Hirabambai	Rabang	1196	N21'36'93.41"	E076'83'51.62"
		10	0.18	1.80		Melghat T. Dn.	Susarda	Susarda	Retya	1185	N21'21'45.57"	E076'44'35.79"
		20	0.18	3.60		Melghat T. Dn.	Jarida	Ekatai	Choladeo	446	N-21 44 482 E-077 22 855	N-21 44 482 E-077 22 855
		10	0.18	1.80		Melghat T. Dn.	Ghatang	Bihali	Bhulori	68	N 21,25,39.02	E 77,27,53.61
		6	0.18	1.08		Melghat T. Dn.	Ghatang	Dhamangaon	Aadnadi	7	N 21,39,53.57	E 77, 43.42
		6	0.18	1.08		Melghat T. Dn.	Ghatang	Dhamangaon	Chichati	18	N 21,21,35.01	E 77,23,50.06
		7	0.18	1.26		Melghat T. Dn.	Anjangaon	Dahigaon	Kakadari	1061	N 21 26 23	E77 24 07
		7	0.18	1.26		Melghat T. Dn.	Anjangaon	Dahigaon	Chandsuraj	1049	N 21 16 34	E77 13 35
		200		**36.00**								
x	Soil and Water Con.Work (MPT,PT, Gabin, Gully plug,Sunkun pund			500.00	Amravati	Amravati	Wadali	location as per LIDAR DPR			N205547.57	E774645.049
				500.00	Amravati	Amravati	Cha.Rly	location as per LIDAR DPR			N205308.592	E775652.542
	Total Amravati Division			**1000.00**								
Total Item No. 5 (2) g Soil and Moisture conseravtion works in the forest				**1598.26**								

Works proposed					Location of work						Latlong	
Rule No.	**Item of work**	**Quantity**	**Rate**	**Amount (Rs. in Lakhs**	**Circle**	**Division**	**Range**	**Round**	**Beat**	**Compartment No**	**Latitude**	**Longitude**
1	**2**	**3**	**4**	**5**	**6**	**7**	**8**	**9**	**10**	**11**	**12**	**13**
5(2) (I)	**Improvement of wildlife habitat as provided in the approved wildlife management plan or working plan**											
iii	**Creation & maintenance of water sources/water holes for wildlife**											
iii	Creation of Borewell with Solar pmp	3	5.00	15.00	Amravati	Amravati	Wadali	Bhatkuli	Lontek	192, 193, 194	N205442.91	E774227.552
		3	6.00	18.00	Amravati	Amravati	Chandur Rly	Malegaon	Mardi	351, 352	N205758.285	E775639.86
		1	5.00	5.00	Amravati	Amravati	Paratwada	Hattighat	W. Hattighat	412	N212347.946	E773241.386
		1	5.00	5.00	Amravati	Amravati	Paratwada	Nayakheda	Wadgoan	368	N211650.6	E772547.35
		1	5.00	5.00	Amravati	Amravati	Paratwada	Shirgaon	Vishroli	442	N212149.72	E774555.92
		2	5.00	10.00	Amravati	Amravati	Warud	Pusla	Pusla	1085P	N213030	E782030
	Total Amravati Division Borewell with Solar pmp	**11**		**58.00**								
iii	Water holes	4	0.80	3.20	Amravati	Amravati	Wadali	Bhatkuli	Lontek	192, 193, 194	N205442.91	E774227.552
		5	0.80	4.00	Amravati	Amravati	Chandur Rly	Malegaon	Mardi	351, 352	N205758.285	E775639.86
		1	0.80	0.80	Amravati	Amravati	Paratwada	Hattighat	W. Hattighat	412	N212323.26	E773139.39
		1	0.80	0.80	Amravati	Amravati	Paratwada	Nayakheda	Wadgoan	368	N212695.25	E77382645
		1	0.80	0.80	Amravati	Amravati	Paratwada	Shirgaon	Vishroli	442	N212532.12	E775426.54
		2	0.80	1.60	Amravati	Amravati	Warud	Pusla	Pusla	1085P	N213030	E782030
	Total Water holes	**14**		**11.20**								
iii	Creation & maintenance of water sources/water holes for wildlife (Mission Melghat)	25	0.80	20.00	Amravati	Amravati	Paratwada	Paratwada	Hatighat (E) , Pandhari	4, 12, 413, 414, 415, 416	N31°23'28.98"	E77°32'51.69"
		10	0.80	8.00	Amravati	Melghat T. Dn.	Susarda	Susarda	Jampani	1182	N21'22'14"	E076'43'32"
		10	0.80	8.00	Amravati	Melghat T. Dn.	Susarda	Susarda	S Bibamal	1193	N21'40'13.54"	E076'83'69.91"
		5	0.80	4.00	Amravati	Melghat T. Dn.	Dharni Range	Patiya	patiya	690	N21.63 506	E77.04 82
		50		**40.00**								
	Total 5 (2) (I)	**75**		**109.20**								

Works proposed					Location of work						Latlong	
Rule No.	**Item of work**	**Quantity**	**Rate**	**Amount (Rs. in Lakhs**	**Circle**	**Division**	**Range**	**Round**	**Beat**	**Compartment No**	**Latitude**	**Longitude**
1	**2**	**3**	**4**	**5**	**6**	**7**	**8**	**9**	**10**	**11**	**12**	**13**
5(2) (j)	**Establishment, operation and maintance of animal rescue centre and vetarnary treatment facility of wild animals**											
i	**Establishment, operation and maintance of animal rescue centre / Transit treatment Centre**	1	80.00	80.00	Amravati	Amravati	Wadali	Wadali	Lontek	192	N205442.91	E774227.552
		1	5.00	5.00	Amravati	Akola	Batrshitakali	Dhaba	Dhaba	127	N203556	E 77 830
		1	5.00	5.00	Amravati	Akola	Alegaon	Alegaon	Alegaon	C-17	N20.403778	E76.844861
		1	5.00	5.00	Amravati	Akola	Akola	Akola	Loni	B-19	N 21044	E765940
		1	5.00	5.00	Amravati	Akola	Patur	Patur	Malrajura	66	N 20.23.55	E 76.55.59
	Total	**5**		**100.00**								
ii	**Veterinary treatment facilities for wild animals**											
	Purchase of Medicine	LS		10.00	Amravati	Amravati	Amrvati division All Ranges					
iii	Animal seizing & capturing devices (Cages)	LS		10.00	Amravati	Amravati	Amrvati division All Ranges					
iv	Rescue emergency operations (Life Jackets, huter shoes)	LS		5.00	Amravati	Amravati	Wadali	Wadali	Wadali	--		
v	Strengthening of Rapid rescue teams	LS		20.00	Amravati	Amravati	Wadali	Wadali	Wadali	--		
		0		**45.00**								
	Total 5 (2) (J)	**5.00**		**145.00**								
	Grand Total for Activities under not less than 80% component			**5439.15**								
5(3)(a)(ii)	**Establishment, up-gradation and maintenance of modern nurseries and other planting stock production facilities for production of quality planting materials (Mission Melghat)**	2		40.00	Amravati	Amravati	Paratwada	Paratwada	Wadgaon	368	N21°16'43.54"	E77°26'13.70"
		1		25.00	Amravati	Melghat T. Dn.	Dharni	Chitri	Bori	729	N21.53 62	E77.10 64
		1		25.00	Amravati	Melghat T. Dn.	Jarida	Butida	Butida	318	N21'63'86.15"	E077'48'41.24"
		4		**90.00**								

Works proposed					Location of work						Latlong	
Rule No.	**Item of work**	**Quantity**	**Rate**	**Amount (Rs. in Lakhs**	**Circle**	**Division**	**Range**	**Round**	**Beat**	**Compartment No**	**Latitude**	**Longitude**
1	**2**	**3**	**4**	**5**	**6**	**7**	**8**	**9**	**10**	**11**	**12**	**13**
5(3)(d)	**construction, upgradation and maintenance of inspection paths, forest roads in forest area, fire lines, watch towers, check posts and timber depots**											
iii	Watch Tower	1	10	10.00	Amravati	Buldana	Motala	Rajur	West khairkhed	328	N20.3420	E76.1102
5(3)(a)(v)	**Construction, up-gradation and maintenance of Inspection paths/Forest roads in forest area/flush causway/watch towers /Check posts/Check Naka (Mission Melghat)**			25.00	Amravati	Amravati	Paratwada	Paratwada	Hatighat (W)	407, 408	N21°23'20.57"	E77°31'41.45"
	Watch Tower cum Protection camp at masandoh	1	13	13	Amravati	Melghat T. Dn.	Dharni Range	Bairagad	Bairagad	671	N 21 65 49	E77 08 89
	Check post	1	3	3	Amravati	Melghat T. Dn.	Susarda	Susarda	Retya	1310	N21'22'42	E076'45'27"
	4.5 km Forest Road	1	1	2	Amravati	Melghat T. Dn.	Susarda	Bibamal	S Bibamal	1201 to 1193	N21'24'56 E076'50'21" '	N21'23'8.8 E076'50'0.5"
	1.5 km Forest Road	1	1	1	Amravati	Melghat T. Dn.	Susarda	Bibamal	Goulandoh	1307	N21'25'28 E076'47'26"	N21'25'16 E076'46'47"
	Check post Kotmi Naka	1	3	3	Amravati	Melghat T. Dn.	Jarida	Butida	Butida	Sarve No-63	N-21 36 43 1	E-077 33 14.2
	Check Post Dhoma Naka	1	3	3	Amravati	Melghat T. Dn.	Jarida	Butida	Butida	Sarve No-23	N-21 32 50.0	E-077 34 08.4
		6.00		**50.00**								
Total 5 (3) d		**7.00**		**60.00**								
5(3)(e)	**Construction of residential and official buildings in forests for front line staff deployed for protection of forest and wildlife**											
i	Construction of Forest Guard Naka Type I	1	22.00	22.00	Amravati	Amravati	Wadali	Wadali	S.Wadali	4	N205547.57	E774645.049
		1	22.00	22.00	Amravati	Amravati	Paratwada	Shirajgaon,	Shirajgaon,	426	N211949.26	E774048.26
	Total Amravati Division	**2**		**44.00**								
	Construction of Forest Guard Naka Type I	1	22	22.00	Amravati	M.T.D. Paratwada	Ghatang	Dhamangaon	Manbhang	5	N21 22 25	E77 25 38
		1	22	22.00	Amravati	M.T.D. Paratwada	Jarida	Rahu	Rahu-FG	393	N 21°42'36.1	E77° 26'06.5
	Total M.T.D.Paratwada	**2**		**44.00**								
	Construction of Forest Guard Naka Type I	1	22	22.00	Amravati	Buldana	Jalgaon	Jamod	Nimkhedi	Gavthan Area	N21.106867	E76.50440528
		1	22	22.00	Amravati	Buldana	Ghatbori	Mandva	D.sakarsha	Gavthan Area	N20 42.955	E76.67679
	Total Buldhana Division	**2**		**44.00**								
Sub Total Type-I Quarter		**6.00**		**132.00**								

Works proposed					Location of work						Latlong	
Rule No.	Item of work	Quantity	Rate	Amount (Rs. in Lakhs	Circle	Division	Range	Round	Beat	Compartment No	Latitude	Longitude
1	2	3	4	5	6	7	8	9	10	11	12	13
ii	Construction of Forester Type - II Quarter	1	26.00	26.00	Amravati	Amravati	Chandur Rly	Chandur Rly	Chandur Rly	NA	N20.874264	E77.917281
		1	26.00	26.00	Amravati	M.T.D. Paratwada	Jarida	Karanj	Karanj	432	N 21°42'49.02	E77° 22'30.03
		1	26.00	26.00	Amravati	Buldana	Jalgaon	Jalgaon	Nimkhedi	Gavthan Area	N21.106867	E76.50440528
		1	26.00	26.00	Amravati	Akola	Bbarshitakali	Lohagad	Lohagad		N.20.47.51.57	E77.08.30.99
Sub Total Construction of Forester Type - II Quarter		**4.00**		**104.00**								
iii	Construction of Type III quartor	1	36.00	36.00	Amravati	Amravati	warud	Pusla	Pusla	1088	N21.584865	E78.525145
		1	36.00	36.00	Amravati	M.T.D. Paratwada	Susarda	-	-	-	N21°23'52.24	E76°45'13.19
		1	36.00	36.00	Amravati	Akola	Alegaon	Alegaon	Alegaon		N20.403676	E76.844612
Sub Total Construction of Type III quartor		**3.00**		**108.00**								
iv	Const. of Range Office	1	45.00	45.00	Amravati	M.T.D. Paratwada	Susarda	-	-	-	N21°23'52.24	E76° 45'13.19
		1	45.00	45.00	Amravati	Amravati	Morshi	Morshi	Morshi	14 (Srv.No.)	N211957.8	E780036.4
		1	45.00	45.00	Amravati	Buldana	Jalgaon	Jalgaon	Jalgaon	Gavthan Area	N21 2 44	E76 31 41
	Total Const. of Range Office	**3**		**135.00**								
Total New Construction Works		**16**		**479.00**								
5(3)(f)(ii)	**Casual engagement of local people or labours to assist regular staff of State Forest Department for works for protection of forest and wildlife undertaken from State Fund (Mission Melghat)**			25.00	Amravati	Amravati	All Range					
				30.00	Amravati	Melghat	All Range					
		0		**55.00**								

Works proposed					Location of work						Latlong	
Rule No.	**Item of work**	**Quantity**	**Rate**	**Amount (Rs. in Lakhs**	**Circle**	**Division**	**Range**	**Round**	**Beat**	**Compartment No**	**Latitude**	**Longitude**
1	**2**	**3**	**4**	**5**	**6**	**7**	**8**	**9**	**10**	**11**	**12**	**13**
5(3) (i)	**Publicity awareness program and establish on the various scheme being implemented by state authority.**	LS		2.00	Amravati	Amravati	All Range					
		LS		2.00	Amravati	M.T.D. Paratwada	All Range					
		LS		2.00	Amravati	Buldana	All Range					
		LS		2.00	Amravati	Akola	All Range					
	Total Publicity	**0**	**1**	**8.00**		**0**	**0**	**0**	**0**			
	Total for Work under not more than 20% Copmonent			**692.00**								
Grand Total for NPV Year 2022-23				**6131.15**								

ANNUAL PLAN OF OPERATIONS 2022-23

FORMAT VII A---- Forestry and other activities proposed under Net Present Value amount (Please see Rule no. 5(2), 5(3), and proviso under Rule 5(3) (NPV - 04)

Aurangabad Territorial Circle

Works proposed					Location of work						Latlong	
Rule No.	Item of work	Quantity /Area	Rate	Amount (Rs. in Lakhs	Circle	Division	Range	Round	Beat	Compartment No	Latitude	Longitude
1	2	3	4	5	6	7	8	9	10	11	12	13
5 (2)	**Works under Not less than 80 % component (Rule 5 (2))**											
5(2)(a)	**Assisted Natural Regeneration (PPO Works)**											
5(2)(b)	**Artificial Regeneration**											
ii	**Artificial Regeneration (4th YO)**											
	AR 4th yr Abad Division	15	0.18	2.70	A.bad	A.bad	Kannad	Chikalthana	Salegaon	175	N20.225013	E75.288774
		20	0.18	3.60	A.bad	A.bad	Kannad	Chikalthana	Jaitkheda	173	N20.245818	E75.269758
		20	0.18	3.60	A.bad	A.bad	Kannad	Kalnki	Kalnki- w	120	N20.169	E74.575
		20	0.18	3.60	A.bad	A.bad	Kannad	Pishor	Bharnmba	59	N20.14219	E75.18223
		10	0.18	1.80	A.bad	A.bad	Nagad	Nagapur	Karnjkhed	86A	N20.399319	E75.2739
		15	0.18	2.70	A.bad	A.bad	Nagad	Nagapur	Karnjkhed	86A	N20.2456	E75.1718
		20	0.18	3.60	A.bad	A.bad	Ajintha	Sawltbara	Murti	524	N20.3521	E75.5634
		20	0.18	3.60	A.bad	A.bad	Ajintha	Sawltbara	Palskheda	527	N20.3322	E75.569
		20	0.18	3.60	A.bad	A.bad	Sillod	Sillod	Sillod	581	N20.2511	E75.55
		15	0.18	2.70	A.bad	A.bad	Sillod	Ganeshpur	Hiwra	51A	N20.2868	E75.374
		15	0.18	2.70	A.bad	A.bad	Sillod	Ganeshpur	Hiwra	51B	N20.256	E75.429
		10	0.18	1.80	A.bad	A.bad	Soygaon	Banoti	Ghosla	470	N20314	E75.2741
	Total AR Aurangabad Div	**200**		**36.00**								
	AR 4th yr Nanded Division	15	0.18	2.70	A.bad	Nanded	Kinwat	Kinwat	Mandava	190	N 19 37 157	E 7816489
		15	0.18	2.70	A.bad	Nanded	Bodhadi	Bodhadi	Bodhadi	215B	N 19 527326	E78 17 0397
		15	0.18	2.70	A.bad	Nanded	Islapur	Islapur	Mulzara	318	N 1936386	E 77 95475
		25	0.18	4.50	A.bad	Nanded	Bhokar	Bhokar	Bhokar	352	N 19 15 05	E 77 3845
		15	0.18	2.70	A.bad	Nanded	Nanded	Bhosi	Wakad A	439	N 19 1619	E 77 383767
	Total 4th Yr Nanded	**85**		**15.30**								
	AR 4th yr Parbhani Division	35	0.18	6.30	A.bad	Parbhani	Parbhni	Aadgaon	Aadgaon	659	N19.36	E76.25
		25	0.18	4.50	A.bad	Parbhani	Parbhni	Jintur	savali	693 A	N19.43	E76.35
		30	0.18	5.40	A.bad	Parbhani	Parbhni	Bhogaon	Bhogaon	669	N19.36	E76.41
		30	0.18	5.40	A.bad	Parbhani	Parbhni	Bhogaon	Dhaba	679	N19.36	E76.51
	Total 4th Yr Parbhani	**120**		**21.60**								

Works proposed					Location of work						Latlong	
Rule No.	Item of work	Quantity /Area	Rate	Amount (Rs. in Lakhs	Circle	Division	Range	Round	Beat	Compartment No	Latitude	Longitude
1	2	3	4	5	6	7	8	9	10	11	12	13
ii	**AR 4th yr Beed Division**	30	0.18	5.40	A.bad	Beed	Beed	Gaorai	Gaorai	355	N19.220053	E75.711757
		25	0.18	4.50	A.bad	Beed	Beed	Gaorai	Gaorai	1125	N19.209116	E75.469348
		15	0.18	2.70	A.bad	Beed	Parli	Parli	Dounapur	428	N18.81.2153	E76.440275
		15	0.18	2.70	A.bad	Beed	Parli	Am.Jogai	Mandwa	42 P/426A	N18.79.5652	E76.39.2805
		25	0.18	4.50	A.bad	Beed	Dharur	Dharur	Sonimoha	68/411B	N18.918205	E76.137545
		30	0.18	5.40	A.bad	Beed	Dharur	Dharur	Kari	34/413	N18.925382	E76.19485
		10	0.18	1.80	A.bad	Beed	Ashti	Kada	Wagluj	84	N18.802378	E75.171511
		20	0.18	3.60	Abd	Beed	Patoda	Patoda	Pimplwandi	222/354	N18.89633	E75.37255
	Total 4th Yr Beed	**170**		**30.60**								
	AR 4th yr Hingoli Division	20	0.18	3.60	A'bad	Hingoli	Hingoli	Waranga	Sukhliveer	517.0	N 19.414044	E 77.367031
		15	0.18	2.70	A'bad	Hingoli	Hingoli	Shiradshahpur	jalaldhaba	65.0	N 19.58085	E 77.17066
	Total 4th Yr Hingoli	**35**		**6.30**								
	Grand Total AR 4th Year	**610.0**		**109.80**								
5(2)(c)	**Silvicultural operations in forests**											
i	**Fodder Development (PPO Works)**											
	Fodder Development (PPO Works)	20.00	2.28	45.60	A.bad	Beed	Parli	Ambajogai	Ambajogai	419/734	N18.76.6995	E76.38 3832
		20.00	2.28	45.60	A.bad	Beed	Parli	Ambajogai	Ambajogai	419/734	N 18.76.6995	E76.38 3832
		20.00	2.28	45.60	A.bad	Beed	Parli	Ambajogai	Mandwa	427/21P	N 18.82 33	E76.37.82
		20.00	2.28	45.60	A.bad	Beed	Parli	Ambajogai	Shepwadi	425	N18.75 5942	E76.42 0755
	Total Fodder PPO Beed	**80.00**		**182.40**								
iv	**Fodder Development (SYO Works)**											
	Fodder Development (SYO Works) Aurangabad	25	0.73	18.25	A.bad	A.bad	Khulrabad	Doltabad	Jatwada	201	N19.5829	E75.19.3
		20	0.73	14.60	A.bad	A.bad	Khulrabad	Doltabad	Dhoptshwar	203	N19.595	E75.1818
		20	0.73	14.60	A.bad	A.bad	Khulrabad	Ganori	Ganori E	24	N20.0113	E75.2112
		20	0.73	14.60	A.bad	A.bad	Khulrabad	Ganori	Ganori W	25	N20.036	E75.34
		25	0.73	18.25	A.bad	A.bad	Khulrabad	Ganori	Choka	20A	N20.023	E75.415
		20	0.73	14.60	A.bad	A.bad	Khulrabad	Ganori	Choka	20A	N20.019	E75.42
		20	0.73	14.60	A.bad	A.bad	Khulrabad	Khultabad	Marhmpur	36	N20.229	E75.12
		30	0.73	21.90	A.bad	A.bad	Aurngabad	Auranbad-2	Satara	287	N19.8184	E75.344
		20	0.73	14.60	A.bad	A.bad	Aurngabad	Adgaon Sark	Kuber Gewrai	245B	N19.937	E75.576
	Total Fodder A'bad SYO	**200**		**146.00**								

Works proposed					Location of work						Latlong	
Rule No.	**Item of work**	**Quantity /Area**	**Rate**	**Amount (Rs. in Lakhs**	**Circle**	**Division**	**Range**	**Round**	**Beat**	**Compartment No**	**Latitude**	**Longitude**
1	**2**	**3**	**4**	**5**	**6**	**7**	**8**	**9**	**10**	**11**	**12**	**13**
iv	**Fodder Development (SYO Works) Beed**	30	0.730	21.90	Abd	Beed	Beed	Neknur	Karchondi	66	N18.873602	E75.668767
		30	0.730	21.90	Abd	Beed	Dharur	Dharur	Kari	95	N18.925455	E 76.20.9406
		20	0.730	14.60	Abd	Beed	Dharur	Wadwani	Kotharban	44	N18.917625	E 076.02.8852
		20	0.730	14.60	Abd	Beed	Dharur	Wadwani	Devala	106	N1894.9424	E75.93.7135
		20	0.730	14.60	Abd	Beed	Parali V	Ambejogai	Ambejogai	419	N18.779668	E76376915
	Total Fodder SYO Beed	**120**		**87.60**								
	Fodder Development (SYO Works) Hingoli	10	0.73	7.30	A'bad	Hingoli	Hingoli	Kalamnuri	Yehalegaon	756	N 19.686201	E 77.463134
		10	0.73	7.30	A'bad	Hingoli	Hingoli	Kalamnuri	Yehalegaon	758	N 19.588809	E 77.450488
		20	0.73	14.60	A'bad	Hingoli	Ondha	Shiradshahapur	Jalaldabha	603B	N 19.551872	E 77.116346
	Total Fodder SYO Hingoli	**40**		**29.20**								
	Grand Total SYO	**360**		**262.80**								
	Grand Total Fodder Development	**440**		**445.20**								
5(2)(d)	**Protection of plantations and forests**											
ii	Survey, Demarcation & Fencing of Sensitive forest areas	25		68.90	A.bad	A.bad	Khultabad	Doltabad	Jatwada	Com.no 201/Gat no.108	N19.5822	E 75.1846
	Survey, Demarcation & Fencing of Sensitive forest areas	2000		30	Abd	Beed	Parali V	Ambejogai	shepwadi	425	N187390	E 764082
	Survey, Demarcation & Fencing of Sensitive forest areas Van vasahat Fencing work	1		30.00	Abad	Nanded	Hadgaon	Hadgaon	Palsa	493/2	N 19.509209	E77.624446
v (b)	Construction of Van Custody	1	23.00	23.00	A'bad	Hingoli	Hingoli	Hingoli	Hingoli	51, 52	N 19.4232	E 77.941
v (c)	Labour Shed	1	6	6.00	Abad	Nanded	Bhokar	Bhokar	Bhokar	268	N 19 1243	E 77 40 07
v (c)	Labour Shed	1	6	6.00	Abad	Nanded	Appraopate	shivni	shivni	501	N 19 32 1926	E 078107887
v (c)	Labour Shed	1	6	6.00	Abad	Nanded	Nanded	Adhapur	Lahan	600	N 19.27 6535	E 77.373572
vii	Improving mobility of frontline staff for forest protection & patrolling.	LS		2.00	Abad	Abad						
		LS		2.00	Abad	Nanded						
		LS		2.00	Abad	Parbhani						
		LS		2.00	Abad	Beed						
		LS		2.00	Abad	Usmanabad						
		LS		2.00	Abad	Hingoli						
	Total 5 (2) (d)			**181.90**								

Works proposed					Location of work						Latlong	
Rule No.	Item of work	Quantity /Area	Rate	Amount (Rs. in Lakhs	Circle	Division	Range	Round	Beat	Compartment No	Latitude	Longitude
1	2	3	4	5	6	7	8	9	10	11	12	13
5(2)(g)	**Soil and moisture conservation works in the forest**											
i	Gabiyan	1.00	1.00	1.00	Aur'bd	Aur'bd	Abad	Karmad	Karmad	284	N19.88925	E75.53235
	Gabiyan	1.00	1.00	1.00	Aur'bd	Aur'bd	Abad	Karmad	Karmad	243	N19.89646	E75.53603
	Gabiyan	1.00	1.00	1.00	Aur'bd	Aur'bd	Abad	Karmad	Karmad	244	N19.9323	E75.58941
	Gabiyan	1.00	1.00	1.00	Aur'bd	Aur'bd	Abad	Karmad	Karmad	244	N19.93302	E75.58432
	Gabiyan	1.00	1.00	1.00	Aur'bd	Aur'bd	Abad	Karmad	Karmad	284	N19.88993	E75.53254
	Gabiyan	1.00	1.00	1.00	Aur'bd	Aur'bd	Abad	Karmad	Karmad	243	N19.89626	E75.53569
	Gabiyan	1.00	1.00	1.00	Aur'bd	Aur'bd	Abad	Karmad	Golatgaon	278	N19.84541	E75.59276
	Gabiyan	1.00	1.00	1.00	Aur'bd	Aur'bd	Abad	Karmad	Golatgaon	279	N19.83442	E75.57226
	Gabiyan	1.00	1.00	1.00	Aur'bd	Aur'bd	Abad	Karmad	Golatgaon	280	N19.82691	E75.58452
	Gabiyan	1.00	1.00	1.00	Aur'bd	Aur'bd	Abad	Karmad	Golatgaon	280	N19.82616	E75.58177
	Gabiyan	1.00	1.00	1.00	Aur'bd	Aur'bd	Abad	Karmad	Golatgaon	278	N19.84513	E75.59168
	Gabiyan	1.00	1.00	1.00	Aur'bd	Aur'bd	Abad	Karmad	Konewadi	248	N19.93295	E75.59604
	Gabiyan	1.00	1.00	1.00	Aur'bd	Aur'bd	Abad	Karmad	Konewadi	247	N19.9303	E75.59208
	Gabiyan	1.00	1.00	1.00	Aur'bd	Aur'bd	Abad	Karmad	Konewadi	247	N19.94166	E75.63224
	Gabiyan	1.00	1.00	1.00	Aur'bd	Aur'bd	Abad	Karmad	Konewadi	248	N19.93583	E75.60424
	Gabiyan	1.00	1.00	1.00	Aur'bd	Aur'bd	Abad	Karmad	Gadhejalgaon	282	N19.84015	E75.56489
	Gabiyan	1.00	1.00	1.00	Aur'bd	Aur'bd	Abad	Karmad	Peerwadi	216	N19.93052	E75.46034
	Gabiyan	1.00	1.00	1.00	Aur'bd	Aur'bd	Abad	Karmad	Peerwadi	217	N19.92487	E75.45102
	Gabiyan	1.00	1.00	1.00	Aur'bd	Aur'bd	Abad	Karmad	Peerwadi	218	N19.91278	E75.49051
	Gabiyan	1.00	1.00	1.00	Aur'bd	Aur'bd	Abad	Adul	Adul	310	N19.4154	E75.301
	Gabiyan	1.00	1.00	1.00	Aur'bd	Aur'bd	Abad	Adul	Adul	310	N19.4144	E75.3017
	Gabiyan	1.00	1.00	1.00	Aur'bd	Aur'bd	Abad	Adul	Adul	316	N19.4641	E75.3016
	Gabiyan	1.00	1.00	1.00	Aur'bd	Aur'bd	Abad	Adul	Adul	316	N19.464	E75.3019
	Gabiyan	1.00	1.00	1.00	Aur'bd	Aur'bd	Abad	Adul	Nijalgaon	292	N19.4647	E75.301
	Gabiyan	1.00	1.00	1.00	Aur'bd	Aur'bd	Abad	Adul	Nijalgaon	292	N19.4607	E75.3017
	Gabiyan	1.00	1.00	1.00	Aur'bd	Aur'bd	Abad	Adul	Nijalgaon	296	N19.4614	E75.2155
	Gabiyan	1.00	1.00	1.00	Aur'bd	Aur'bd	Abad	Adul	Nijalgaon	297	N19.453	E75.2245
	Gabiyan	1.00	1.00	1.00	Aur'bd	Aur'bd	Abad	Adul	Nijalgaon	295	N19.4606	E75.2217
	Gabiyan	1.00	1.00	1.00	Aur'bd	Aur'bd	Abad	Adul	Nijalgaon	299	N19.455	E75.2417
	Gabiyan	1.00	1.00	1.00	Aur'bd	Aur'bd	Abad	Adul	Nijalgaon	299	N19.4554	E75.2319
	Gabiyan	1.00	1.00	1.00	Aur'bd	Aur'bd	Abad	Adul	Nijalgaon	299	N19.4537	E75.2417
	Gabiyan	1.00	1.00	1.00	Aur'bd	Aur'bd	Abad	Adul	Nijalgaon	300	N19.4509	E75.2407
	Gabiyan	1.00	1.00	1.00	Aur'bd	Aur'bd	Abad	Adul	Nijalgaon	300	N19.3946	E75.2419
	Gabiyan	1.00	1.00	1.00	Aur'bd	Aur'bd	Abad	Adul	Nijalgaon	305	N19.374	E75.2512
	Gabiyan	1.00	1.00	1.00	Aur'bd	Aur'bd	Abad	Adul	Nijalgaon	305	N 19.3969	E75.2413
	Total A'bad Gabian	**35.00**		**35.00**								

Works proposed					Location of work						Latlong	
Rule No.	Item of work	Quantity /Area	Rate	Amount (Rs. in Lakhs	Circle	Division	Range	Round	Beat	Compartment No	Latitude	Longitude
1	2	3	4	5	6	7	8	9	10	11	12	13
i	Gabian Strcture	1	0.50	0.50	Abad	Nanded	Appraopate	appraopate	appraopate	283	N 19. 24 56 54	E 78 14 07 06
	Gabian Strcture	1	0.50	0.50	Abad	Nanded	Appraopate	appraopate	appraopate	283	N 19. 25 20 05	E 78 14 35 67
	Gabian Strcture	1	0.50	0.50	Abad	Nanded	Appraopate	appraopate	appraopate	284	N 19. 23 96 37	E 78 14 08 59
	Gabian Strcture	1	0.50	0.50	Abad	Nanded	Appraopate	appraopate	appraopate	284	N 19. 23 96 0	E 78 14 08 72
	Gabian Strcture	1	0.50	0.50	Abad	Nanded	Appraopate	appraopate	appraopate	284	N 19. 23 8785	E 78 14 80 53
	Gabian Strcture	1	0.50	0.50	Abad	Nanded	Appraopate	appraopate	Malakjam	288	N 19. 15005	E 78 15 6604
	Gabian Strcture	1	0.50	0.50	Abad	Nanded	Appraopate	appraopate	Malakjam	288	N 19. 15544	E 78 657800
	Gabian Strcture	1	0.50	0.50	Abad	Nanded	Appraopate	appraopate	Malakjam	288	N 19. 15358	E 78 06661
	Gabian Strcture	1	0.50	0.50	Abad	Nanded	Appraopate	appraopate	Pangarpahad	290	N 19. 15025	E 78 06 518
	Gabian Strcture	1	0.50	0.50	Abad	Nanded	Appraopate	appraopate	Pangarpahad	290	N 19. 15009	E 78 06 363
	Gabian Strcture	1	0.50	0.50	Abad	Nanded	Appraopate	appraopate	Pangarpahad	290	N 19. 15365	E 78 06 465
	Gabian Strcture	1	0.50	0.50	Abad	Nanded	Appraopate	appraopate	Malakjam N	277 A	N 19. 29163	E 78 12 14 39
	Gabian Strcture	1	0.50	0.50	Abad	Nanded	Appraopate	appraopate	Malakjam N	277 A	N 19. 293286	E 78 12 4592
	Gabian Strcture	1	0.50	0.50	Abad	Nanded	Appraopate	appraopate	Malakjam N	277 A	N 19. 293292	E 78 12 6393
	Gabian Strcture	1	0.50	0.50	Abad	Nanded	Appraopate	appraopate	Malakjam N	277 A	N 19. 292643	E 78 12 3725
	Gabian Strcture	1	0.50	0.50	Abad	Nanded	Appraopate	appraopate	Malakjam N	277 A	N 19. 298817	E 78 12 0134
	Gabian Strcture	1	0.50	0.50	Abad	Nanded	Appraopate	appraopate	Malakjam N	277 A	N 19. 299227	E 78 12 119
	Gabian Strcture	1	0.50	0.50	Abad	Nanded	Appraopate	appraopate	Malakjam N	277 A	N 19. 298992	E 78 12 2273
	Gabian Strcture	1	0.50	0.50	Abad	Nanded	Appraopate	appraopate	Malakjam N	277 A	N 19. 298636	E 78 12 3192
	Gabian Strcture	1	0.50	0.50	Abad	Nanded	Appraopate	appraopate	Malakjam N	277 A	N 19. 298057	E 78 12 4857
	Gabian Strcture	1	0.50	0.50	Abad	Nanded	Appraopate	appraopate	Malakjam N	277 A	N 19. 297924	E 78 12 4927
	Gabian Strcture	1	0.50	0.50	Abad	Nanded	Appraopate	appraopate	Malakjam N	277 A	N 19. 297807	E 78 12 637
	Gabian Strcture	1	0.50	0.50	Abad	Nanded	Appraopate	appraopate	Malakjam N	277 A	N 19. 282024	E 78 131076
	Gabian Strcture	1	0.50	0.50	Abad	Nanded	Appraopate	appraopate	Malakjam N	277 A	N 19. 280553	E 78 13175
	Gabian Strcture	1	0.50	0.50	Abad	Nanded	Appraopate	appraopate	Malakjam N	277 A	N 19. 283619	E 78 131407
	Gabian Strcture	1	0.50	0.50	Abad	Nanded	Appraopate	appraopate	Malakjam N	277 A	N 19. 292873	E 78 120432
	Gabian Strcture	1	0.50	0.50	Abad	Nanded	Appraopate	appraopate	Malakjam N	277 A	N 19. 29219	E 78 122765
	Gabian Strcture	1	0.50	0.50	Abad	Nanded	Appraopate	Shivni	Kancheli	299	N 19. 29916	E 78 .08993
	Gabian Strcture	1	0.50	0.50	Abad	Nanded	Appraopate	Shivni	Kancheli	299	N 19. 298995	E 78 .09208
	Gabian Strcture	1	0.50	0.50	Abad	Nanded	Appraopate	Shivni	Kancheli	299	N 19. 29689	E 78 .09670
	Gabian Strcture	1	0.50	0.50	Abad	Nanded	Appraopate	Shivni	Kancheli	296c	N 19. 27492	E 78 .07712
	Gabian Strcture	1	0.50	0.50	Abad	Nanded	Appraopate	Shivni	Kancheli	296c	N 19. 27010	E 78 .07225
	Gabian Strcture	1	0.50	0.50	Abad	Nanded	Appraopate	Shivni	tallari	264	N 19. 342833	E 78 .034252
	Gabian Strcture	1	0.50	0.50	Abad	Nanded	Appraopate	Shivni	Sevadas tanda	303	N 19. 192700	E 78 .034800
	Gabian Strcture	1	0.50	0.50	Abad	Nanded	Appraopate	Shivni	Wagdhari A	763	N 19.233600	E 78 .095800
	Gabian Strcture	1	0.50	0.50	Abad	Nanded	Appraopate	Shivni	Wagdhari B	762	N 19.421593	E 78 .101382
	Gabiyan Bandhare	1	0.50	0.50	A'bad	Hingoli	Sengaon	Sengaon	Sengaon	654 A	N 19.8017	E 76.9486
	Total Gabian Nanded	**37.00**		**18.50**								
	Total Overall Gabian Works	**72.00**		**53.50**								

Works proposed					Location of work						Latlong	
Rule No.	Item of work	Quantity /Area	Rate	Amount (Rs. in Lakhs	Circle	Division	Range	Round	Beat	Compartment No	Latitude	Longitude
1	2	3	4	5	6	7	8	9	10	11	12	13
iv	**Cration of forest Vantale**											
	Vantale	1	3	3.00	Abd	Beed	Parali V	Ambejogai	mandva	426a	N 18821485	E7691401
	Vantale	1	3	3.00	Abd	Beed	Parali V	Parali V	Daunapur	480	N 18948491	E 76407676
	Vantale	1	3	3.00	Abd	Beed	Parali V	Parali V	Daunapur	429a	N18818732	E 76439863
	Total Beed Vantale	**3.00**		**9.00**								
	Vantale	1	3	3.00	A'bad	Hingoli	Aundha	Shiradshahapur	Jalaldhaba	603B	N 19.55 14 66	E77.11 76 53
	Vantale	1	3	3.00	A'bad	Hingoli	Aundha	Shiradshahapur	Jalaldhaba	603A	N 19.75 05 12	E 77.11 17 53
	Vantale	1	3	3.00	A'bad	Hingoli	Aundha	Shiradshahapur	Jalaldhaba	604A2	N 19.55.5711	E 77.15 4015
	Vantale	1	3	3.00	A'bad	Hingoli	Aundha	Shiradshahapur	Jalaldhaba	605F	N 19.58 59 61	E 77.128845
	Vantale	1	3	3.00	A'bad	Hingoli	Aundha	Shiradshahapur	Shiradshahapur	598	N 19 30 43	E 77 636
	Vantale	1	3	3.00	A'bad	Hingoli	Aundha	Shiradshahapur	Shiradshahapur	597	N 19 3041	E 77 634
	Vantale	1	3	3.00	A'bad	Hingoli	Aundha	Aundha	Anjanwadaa	615C	N 19.599767	E 77.016899
	Vantale	1	3	3.00	A'bad	Hingoli	Aundha	Aundha	Anjanwadaa	616	N 19.594895	E 77.026477
	Vantale	1	3	3.00	A'bad	Hingoli	Aundha	Aundha	Nageshwadi	600A	N 19.495159	E 77.055756
	Vantale	1	3	3.00	A'bad	Hingoli	Aundha	Aundha	Nageshwadi	600A	N 19.415084	E 77.058758
	Vantale	1	3	3.00	A'bad	Hingoli	Aundha	Shiddheshwar	Dhegaj	638B	N 19.665349	E 76.942186
	Vantale	1	3	3.00	A'bad	Hingoli	Aundha	Shiddheshwar	Dhegaj	638B	N 19.665238	E 76.94888
	Vantale	1	3	3.00	A'bad	Hingoli	Aundha	Aundha	Sukapur	760	N 19.571117	E 77.00805
	Vantale	1	3	3.00	A'bad	Hingoli	Aundha	Aundha	Sukapur	760	N 19.574058	E 77.007282
	Vantale	1	3	3.00	A'bad	Hingoli	Hingoli	Waranga	Bhategaon	475 A	N 19.413149	E 77.401578
	Vantale	1	3	3.00	A'bad	Hingoli	Hingoli	Waranga	Bhategaon	475 A	N 19.41315	E 77.401961
	Vantale	1	3	3.00	A'bad	Hingoli	Hingoli	Waranga	Waranga	475 B	N 19.41653	E 77.40645
	Vantale	1	3	3.00	A'bad	Hingoli	Hingoli	Waranga	Waranga	475 B	N 19.41659	E 77.40625
	Vantale	1	3	3.00	A'bad	Hingoli	Sengaon	Yeldari	Bhandari	726	N 19'75'67.72	E 76'76'532
	Vantale	1	3	3.00	A'bad	Hingoli	Sengaon	Yeldari	Bhandari	726	N 19'75'67.72	E 76'76'532
	Total Vantale Hingoli Div.	**20.00**		**60.00**								
	Total Overall Vantale	**23.00**		**69.00**								
v	**Deep CCT**											

Works proposed					Location of work						Latlong	
Rule No.	Item of work	Quantity /Area	Rate	Amount (Rs. in Lakhs	Circle	Division	Range	Round	Beat	Compartment No	Latitude	Longitude
1	2	3	4	5	6	7	8	9	10	11	12	13
	DEEP CCT	5	--	2.90	A'bad	Hingoli	Aundha	Aundha	Nageshwadi	600A	N 19.50145	E 77.065179
	DEEP CCT	5	--	2.90	A'bad	Hingoli	Aundha	Aundha	Nageshwadi	600D	N 19.494432	E 77.03101
	Total CCT & Deep CCT Hingoli Div.	**10.00**		**5.80**								
	Deep CCT	1	-	3.00	Abd	Beed	Parali V	Ambejogai	Ambalwadi	432	N 18792346	E76481326
	Deep CCT part I	1	-	3.00	Abd	Beed	Parali V	Ambejogai	mandva i	426a	N 18821485	E76391401
	Deep CCT part II	1	-	3.00	Abd	Beed	Parali V	Ambejogai	mandva II	426a	N 18821485	E76391401
	Deep CCT	1	-	3.00	Abd	Beed	Parali V	Parali V	Daunapur	429a	N 18818732	E76439863
	Deep CCT	1	-	3.00	Abd	Beed	Parali V	Parali V	Daunapur	429a	N 18818732	E76439863
	Deep CCT	1	-	3.00	Abd	Beed	Parali V	Parali V	Parali V	435	N 18827458	E76555131
	Deep CCT	1	-	3.00	Abd	Beed	Parali V	Parali V	Parali V	435	N 18818186	E76565008
	Deep CCT	1	-	3.00	Abd	Beed	Parali V	Am.jogai	Am.jogai	419	N 18758461	E76388937
	Deep CCT	1	-	3.00	Abd	Beed	Parali V	Am.jogai	Am.jogai	425	N 18743846	E76405888
	Total Beed DCCT	**9.00**		**27.00**								
	Total Overall DCCT	**19.00**		**32.80**								
vi	**Earthan/ Mati Nala Bumds**											
vi	MNB	1.00	3.00	3.00	Aur'bd	Aur'bd	Abad	Karmad	Karmad	284A	N 19.8885	E75.53249
	MNB	1.00	3.00	3.00	Aur'bd	Aur'bd	Abad	Karmad	Golatgaon	278	N 19.84462	E75.59173
	MNB	1.00	3.00	3.00	Aur'bd	Aur'bd	Abad	Adul	Adul	310	N 19.4114	E75.2948
	MNB	1.00	3.00	3.00	Aur'bd	Aur'bd	Abad	Adul	Nijalgaon	294	N 19..4609	E75.2102
	MNB	1.00	3.00	3.00	Aur'bd	Aur'bd	Ajintha	Savaldabara	Teetvi	529B	N 20.5462	E75.968
	MNB	1.00	3.00	3.00	Aur'bd	Aur'bd	Ajintha	Saavaldabara	Palsoda	526A	N 20.34113	E75.5604
	MNB	1.00	3.00	3.00	Aur'bd	Aur'bd	Ajintha	Jamthi	Vadali	514	N 20.54917	E75.858343
	MNB	1	3.00	3.00	Aur'bd	Aur'bd	Kannad	Jamdi	Jamdi	Comp No.138, Cut No. 95	N 20 14'35"	E75 02'28"
	MNB	1	3.00	3.00	Aur'bd	Aur'bd	Kannad	Jamdi	Chapaner	Comp No.134, Cut No. 407	N 20 13'38"	E76 03'04"
	MNB	1	3.00	3.00	Aur'bd	Aur'bd	Kannad	Kalanki	Kalanki E	Comp No.123, Cut no 164	N 20.15'58"	E75.00'1"
	MNB	1	3.00	3.00	Aur'bd	Aur'bd	Kannad	Kalanki	Kalanki W	Comp No.121, Cut no 162	N 20 14'35"	E74 58'49"
	MNB	1	3.00	3.00	Aur'bd	Aur'bd	Kannad	Chikalthan	Jaitkheda	Comp No.172, Cut No. 132	N 20.180651	E75.257203
	MNB	1	3.00	3.00	Aur'bd	Aur'bd	Kannad	Chikalthan	Salegaon	Comp No.174, Cut No. 47	N 20.220302	E75.293413
	MNB	1	3.00	3.00	Aur'bd	Aur'bd	Kannad	Chikalthan	Wadali	Comp No.169, Cut No. 52	N 20.222442	E75.234437
	MNB	1.00	3.00	3.00	Aur'bd	Aur'bd	Vaijapur	Parla	Parla	Comp No.563, Cut no 252	N 20.01119	E74.43235
	Total MNB A'bad	**15.00**	**45.00**	**45.00**								

Works proposed					Location of work						Latlong	
Rule No.	Item of work	Quantity /Area	Rate	Amount (Rs. in Lakhs	Circle	Division	Range	Round	Beat	Compartment No	Latitude	Longitude
1	2	3	4	5	6	7	8	9	10	11	12	13
	MNB	1	3.00	3.00	A'bad	Hingoli	Aundha	Aundha	Anjanwada	615	N 19.606395	E 77.00866
	MNB	1	3.00	3.00	A'bad	Hingoli	Aundha	Aundha	Nageshwadi	600D	N 19.488062	E 77.071791
	MNB	1	3.00	3.00	A'bad	Hingoli	Aundha	Aundha	Nageshwadi	600D	N 19.487852	E 77.071871
	Total MNB Hingoli	**3.00**		**9.00**								
	MNB	1	3.00	3.00	Abd	Beed	Parali V	Parali V	Daunapur	429a	N18818732	E76439863
	MNB	1	3.00	3.00	Abd	Beed	Parali V	Am.jogai	Am.jogai	418	N 18774056	E76369336
	MNB	1	3.00	3.00	Abd	Beed	Parali V	Am.jogai	Am.jogai	418	N 18740067	E76391401
	Total MNB Beed	**3.00**		**9.00**								
	Total Overall MNB	**21.00**		**63.00**								
	Grand Total SMS Works	**135.00**		**218.30**								
	Grand Total for Activities under not less than 80% component			**955.20**								
5 (3)	**Works under not more than 20 % component (Rule 5 (3))**											
5(3)(d)	**Construction, up-gradation and maintenance of inspection paths, forest roads in forest area, fire lines, watch towers, check posts and timber depots**											
	Watch tower	1	10	10.00	Abad	Nanded	Hadgaon	loha	Palsa	436	N 19 17 45	E 077.36 10
	Total Nanded Watch tower	**1.00**		**10.00**								
	Construction of Watch Tower	1	10	10.00	A'bad	Hingoli	Hingoli	Kalamnuri	Shindgi	510 A	N 19.673	E 77.3184
	Construction of Watch Tower	1	10	10.00	A'bad	Hingoli	Aundha	Shiradshahapur	Shiradshahapur	598	N 19.30 49	E 77.5 59
	Total Hingoli Watch Towers	**2**		**20.00**								
	Construction of Checkpost	1	8.50	8.50	A'bad	Hingoli	Hingoli	Waranga	Waranga	475	N 19.4164	E 77.4014
	Total Hingoli Checkpost	**1**		**8.5**								
	Total 5 (3) (d)	**4.00**		**38.50**								

Works proposed					Location of work						Latlong	
Rule No.	Item of work	Quantity /Area	Rate	Amount (Rs. in Lakhs	Circle	Division	Range	Round	Beat	Compartment No	Latitude	Longitude
1	2	3	4	5	6	7	8	9	10	11	12	13
5 (3) (e)	**Construction of residential and official buildings in forests for front line staffs deployed for protection of forest and wildlife**											
i	**Construction of Type I Quarters**	1.00	22.00	22.00	Abad	Abad	Khultabad	Chouka	Chouka	Survey. No.495/Com	N 20.32002	E75.093281
		1.00	22.00	22.00	Abad	Abad	Khultabad	Ganori	Ganori	Survey. No.495/Com	N 20.10202	E75.13358
	Total Aur'bd Div Type I Quarters	**2.00**		**44.00**								
i	**Construction of Type I Quarters**	1	22.00	22.00	Abad	Nanded	Nanded	Adhapur	Lahan	600	N 19.27 6535	E 77.373572
		1	22.00	22.00	Abad	Nanded	Hadgaon	Hadgaon	Niwgha	498B	N 19.3543	E 77.3257
	Total Nanded Type I Quarters	**2.00**		**44.00**								
i	**Construction of Type I Quarters**	1	22.00	22.00	A'bad	Hingoli	Aundha	Aundha	Aundha	--	N 19.32 20	E 77. 2 18
		1	22.00	22.00	A'bad	Hingoli	Sengaon	Sengaon	Lingdari	655 b	N 19.7552	E 76.8817
	Total Hingoli Type I Quarters	**2.00**		**44.00**								
	Total Type I Quarters	**6.00**		**132.00**								
ii	**Construction of Type II Quarters**	1.00	26.00	26.00	Abad	Abad	Khultabad	Chouka	Ganori	Survey. No.495/Com	N 20.10202	E75.133581
		1	26.00	26.00	Abad	Nanded	Hadgaon	Hadgaon	Palsa	493B	N 19.50 .618	E 077 36 470
		1	26.00	26.00	A'bad	Hingoli	Hingoli	Kalamnuri	Hingoli	81, 82	N 19.673	E 77.3184
	Total Construction Type II Quarters	**3.00**		**78.00**								
iii	**Construction of Type iii Quarters**	1	36	36.00	A'bad	A'bad	Khultabad	Khultabad	Khultabad	Survey. No.2/Com no	N 20.00402	E75.112481
		1	36	36.00	Abad	Nanded	Hadgaon	Hadgaon	Palsa	493B	N 19 50 275	E 077.62 09
	Total Construction Type III Quarters	**2**		**72.00**								
iv	**Construction of Range office**	1	45	45.00	Abad	A]bd	Aurngabad	Aurangbad-2	Satara	City survey no. 18040	N19.8700321	E75.3249834
		1	45	45.00	Abad	Nanded	Hadgaon	Hadgaon	Palsa	493B	N 19 50 209	E 077 62 44
		1	45	45.00	A'bad	Hingoli	Hingoli	Hingoli	Hingoli	51, 52	N 19.4232	E 77.94
	Total Range offices	**3**		**135.00**								

Works proposed					Location of work						Latlong	
Rule No.	**Item of work**	**Quantity /Area**	**Rate**	**Amount (Rs. in Lakhs**	**Circle**	**Division**	**Range**	**Round**	**Beat**	**Compartment No**	**Latitude**	**Longitude**
1	**2**	**3**	**4**	**5**	**6**	**7**	**8**	**9**	**10**	**11**	**12**	**13**
v	**Amenities for Woman Front line staff**											
	Amenities for Woman Front line staff	1	14.00	14.00	Abad	Abad	Khultabad	Khultabad	Khultabad	Survey. No.2/Com no	N20.00402	E75.11364
		1	14.00	14.00	Abad	Nanded	Hadgaon	Hadgaon	Palsa	493/2	N 19.509209	E77.624446
		1	14.00	14.00	A'bad	Hingoli	Hingoli	Hingoli	Hingoli	51, 52	N 19.4227	E 77.936
	Total Amenities for Woman Front line staff	**3**		**42.00**								
	Total 5(3) (e)	**17.00**		**459.00**								
5(3)(i)	Publicity-cum-awareness programme and exhibition on the various schemes being implemented by the State Authority from State Fund	LS		2.00	Abad	Abad						
		LS		2.00	Abad	Nanded						
		LS		2.00	Abad	Parbhani						
		LS		2.00	Abad	Beed						
		LS		2.00	Abad	Usmanabad						
		LS		2.00	Abad	Hingoli						
	Total 5 (2) (d)			**12.00**								
	Total for works under not more than 20% component			**509.50**								
	Total Overall Grand Total NPV			**1464.70**								

ANNUAL PLAN OF OPERATIONS 2022-23

FORMAT VII A---- Forestry and other activities proposed under Net Present Value amount (Please see Rule no. 5(2), 5(3), and proviso under Rule 5(3) (NPV - 04)

Chandrapur Territorial Circle

Works proposed					Location of work						Latlong	
Rule No.	**Item of work**	**Quantity**	**Rate**	**Amount (Rs. in Lakhs**	**Circle**	**Division**	**Range**	**Round**	**Beat**	**Compartment No**	**Latitude**	**Longitude**
1	**2**	**3**	**4**	**5**	**6**	**7**	**8**	**9**	**10**	**11**	**12**	**13**
5 (2)	**Works under Not less than 80 % component (Rule 5 (2))**											
5(2)(b)	**Artificial Regeneration**											
i	Artificial Regeneration 4th YO Works	40	0.18	7.20	Chandrapur	Chandrapur	Chandrapur	Morawa	Morawa	518	N19.9505461	E79.2954094
		25	0.18	4.50	Chandrapur	Chandrapur	Warora	Rampur	Rampur	7B	N20.25182	E79.00395
		10	0.18	1.80	Chandrapur	Chandrapur	Warora	Salori	Salori	926	N20.15419	E79.50544
		25	0.18	4.50	Chandrapur	Chandrapur	Warora	Salori	Salori	14A	N20.17648	E79.03772
		5	0.18	0.90	Chandrapur	Chandrapur	Warora	Chinora	Chinora	59	N20.16659	E79.01392
		105.00		**18.90**	Chandrapur							
		8.00	0.18	1.44	Chandrapur	Central Chanda	Ballarshah	Ballarshah	Visapur 1	578	N19 52 30.5"	E79 21 35.8"
		5.00	0.18	0.90	Chandrapur	Central Chanda	Ballarshah	Ballarshah	Ballarshah	494	N19 52 02.9 "	E79 22 08.3"
		6.00	0.18	1.08	Chandrapur	Central Chanda	Ballarshah	Manora	Vishanunagr	448	N19 51 399"	E79 30.903"
		8.00	0.18	1.44	Chandrapur	Central Chanda	Ballarshah	Manora	Vishanunagr	448	N19 50.817"	E79 31.791"
		15.00	0.18	2.70	Chandrapur	Central Chanda	Kothari	Karanji	Karanji	126	N19 43.56"	E79 37.31"
		15.00	0.18	2.70	Chandrapur	Central Chanda	Kothari	Karanji	Karanji	127	N19 44.11"	E79 38.12"
		30.00	0.18	5.40	Chandrapur	Central Chanda	Pombhurna	Ghosari	Pipari Dixit	544 Bembal	N19 55 53.3"	E79 42 22.6"
		30.00	0.18	5.40	Chandrapur	Central Chanda	Pombhurna	Ghosari	Pipari Dixit	544 Bembal	N19 56 10.1"	E79 41 53.5"
		30.00	0.18	5.40	Chandrapur	Central Chanda	Pombhurna	Ghosari	Pipari Dixit	544 Bembal	N19 55 55.4"	E79 41 48.2"
		8.00	0.18	1.44	Chandrapur	Central Chanda	Pombhurna	Pombhurna	Dewada	673 Jamkhurd	N19 55 34.9"	E79 39.00.0"
		25.00	0.18	4.50	Chandrapur	Central Chanda	Ballarshah	Umri	Satara Bhosle	441	N19 54.973"	E79 31.931"
		180.00		**32.40**								

Works proposed					Location of work						Latlong	
Rule No.	**Item of work**	**Quantity**	**Rate**	**Amount (Rs. in Lakhs**	**Circle**	**Division**	**Range**	**Round**	**Beat**	**Compartment No**	**Latitude**	**Longitude**
1	**2**	**3**	**4**	**5**	**6**	**7**	**8**	**9**	**10**	**11**	**12**	**13**
i	Artificial Regeneration 4th YO Works	25.00	0.18	4.50	Chandrapur	Bramhapuri	Sindewahi	Navargaon	Navargaon-1	234	N 20^0 22' 33.3"	E 0790 33' 12.9"
		25.00	0.18	4.50	Chandrapur	Bramhapuri	Sindewahi	Navargaon	Navargaon-2	238	N 20^0 19' 33.9"	E 0790 39' 00.9"
		15.00	0.18	2.70	Chandrapur	Bramhapuri	North Bramhapuri	Bramhapuri	Khedmakta	849	N 20^0 36' 27.1"	E 0790 49' 37.6"
		15.00	0.18	2.70	Chandrapur	Bramhapuri	North Bramhapuri	Bramhapuri	Torgaon	815	N 20^0 40' 31.2" N 20 40' 30.5"	E79 47 49.8
		40.00	0.18	7.20	Chandrapur	Bramhapuri	South Bramhapuri	Awargaon	Halda	1146	N 20^0 20' 41.3"	E 0790 56' 53.2"
		20.00	0.18	3.60	Chandrapur	Bramhapuri	Chimur	Bhisi	Gadpipari	405	N 20 38 18 N20 37 54.3	E079 28 18 E079 29 38.1
		20.00	0.18	3.60	Chandrapur	Bramhapuri	Nagbhid	Mindhala	Kosambi Gawali	757	N 20^0 33' 0.21"	E 0790 44' 0.68"
		15.00	0.18	2.70	Chandrapur	Bramhapuri	Nagbhid	Mindhala	Kosambi Gawali	758	N 20^0 32' 0.97"	E 0790 45' 0.12"
		15.00	0.18	2.70	Chandrapur	Bramhapuri	Talodhi	Talodhi	Aalewahi	91	N 20^0 21' 36.8"	E 0790 41' 31.9"
		10.00	0.18	1.80	Chandrapur	Bramhapuri	Talodhi	Talodhi	Gangasagar Heti	90	N 20^0 24' 32.29"	E 0790 43' 10.53"
		200.00		**36.00**								
	Total:-	**485.00**		**87.30**								
	Total for Artificial Regeneration	**485.00**		**87.30**								
5(2)(c)	**Silvicultural operations in forests**											
iii	Fodder Development (FYO Works)	15.00	1.08	16.20	Chandrapur	Central Chanda	Dhaba	Dhaba	Dhaba	587 C	N190 36.346"	E79 36.269"
		20.00	1.08	21.60	Chandrapur	Central Chanda	Dhaba	Dhaba	Dhaba	587 B	N19 36.421"	E79 36.89"
		15.00	1.08	16.20	Chandrapur	Central Chanda	Rajura	Vihirgaon	Murti	590	N19 42.519"	E79 26 32.5"
		5.00	1.08	5.40	Chandrapur	Central Chanda	Ballarshah	Manora	Itoli 1	521	N19 52.611"	E79 28.244"
		5.00	1.08	5.40	Chandrapur	Central Chanda	Ballarshah	Umari	Umari 1	446	N19 53.113"	E79 31.919"
		15.00	1.08	16.20	Chandrapur	Central Chanda	Pombhurna	Ghosari	Navegaon Bhu.	586	N19 55 54.1"	E79 76.04.7"
		20.00	1.08	21.60	Chandrapur	Central Chanda	Wansadi	Pardi	Pardi	182	N19 44.019"	E79 56.810"
	Total:-	**95.00**		**102.60**								
iv	Fodder Development (SYO Works)	25.00	**0.73**	18.25	Chandrapur	Chandrapur	Warora	Tembhurda	Temburda	8	N200 21' 46.03"	E790 00' 53.3"
	Total for Silvicultural operations in forests	**120.00**		**120.85**								

Works proposed					Location of work						Latlong	
Rule No.	**Item of work**	**Quantity**	**Rate**	**Amount (Rs. in Lakhs**	**Circle**	**Division**	**Range**	**Round**	**Beat**	**Compartment No**	**Latitude**	**Longitude**
1	**2**	**3**	**4**	**5**	**6**	**7**	**8**	**9**	**10**	**11**	**12**	**13**
	Forest Protection											
5(2)(d)	**Protection of plantations and forests**											
i	Encroachment removal & Forest Protection	100	0.369	36.91	Chandrapur	Central Chanda	Ballarshah ,	Umari	Satara Bho.		N 19^0 55 15.981	E79^0 32 34.484
					Chandrapur	Central Chanda	Ballarshah ,	Manora	Manora		N 19^0 53 40.734	E79^0 29 30.697
					Chandrapur	Central Chanda	Ballarshah ,	Karwa	Karwa		N $19^0$54.12.930	E79^0 23 49.954
					Chandrapur	Central Chanda	Ballarshah ,	Kalamna	Kem		N $19^0$51 48.047	E79^0 23 48.612
					Chandrapur	Central Chanda	Kothari	Parsodi	Parsodi		N $19^0$43 38.396	E$79^0$30 51.187
					Chandrapur	Central Chanda	Kothari	Karnji	Chiwanda		N $19^0$41 49.734	E$79^0$37 17.542
					Chandrapur	Central Chanda	Jiwati	Patan	Kolandi		N $19^0$33 21.302	E$79^0$13 22.127
					Chandrapur	Central Chanda	Jiwati	Bhari	Shedwahi		N $19^0$28 32.877	E$79^0$11 30.782
					Chandrapur	Central Chanda	Wirur	Antargaon	Antargaon 1		N $19^0$32 45.081	E$79^0$28 46.427
					Chandrapur	Central Chanda	Wirur	Koshtala	Koshtala		N $19^0$32 15.568	E$79^0$25 21.786
					Chandrapur	Central Chanda	Wansadi	Pardi	Durgadi		N $19^0$42 13.881	E$78^0$52 19.767
					Chandrapur	Central Chanda	Wansadi	Pardi	Jambhuldhara		N $19^0$40 23.877	E$78^0$55 26.237
					Chandrapur	Central Chanda	Pombhurna	Pombhurana	Kemara		N $19^0$49 09.749	E$79^0$35 58.393
					Chandrapur	Central Chanda	Pombhurna	Pombhurana	Ghanoti		N $19^0$49 59.385	E$79^0$34 21 21.804
					Chandrapur	Central Chanda	Pombhurna	Pombhurana	Pombhurana		N $19^0$50 34.264	E$79^0$37 02.786
					Chandrapur	Central Chanda	Pombhurna	Pombhurana	Chintaldhaba		N $19^0$48 54.982	E$79^0$38.24.618
					Chandrapur	Central Chanda	Rajura	Rajura	Sumthana		N $19^0$44 24.004	E$79^0$19 39.091
					Chandrapur	Central Chanda	Rajura	Tembhurwahi	Tulana		N $19^0$43 34.372	E$79^0$23 32.514
					Chandrapur	Central Chanda	Rajura	Vihirgaon	Vihirgaon		N $19^0$44 25.349	E$79^0$28 19.597
					Chandrapur	Central Chanda	Dhaba	Dhaba	Wedgaon		N $19^0$33 53.498	E$79^0$34 49.976
					Chandrapur	Central Chanda	Dhaba	Gondpipari	Gojoli		N $19^0$40 26.560	E$79^0$39 29.010
	Total:-	**100**		**36.91**								

Works proposed					Location of work						Latlong	
Rule No.	**Item of work**	**Quantity**	**Rate**	**Amount (Rs. in Lakhs**	**Circle**	**Division**	**Range**	**Round**	**Beat**	**Compartment No**	**Latitude**	**Longitude**
1	**2**	**3**	**4**	**5**	**6**	**7**	**8**	**9**	**10**	**11**	**12**	**13**
ii	Survey, Demarcation & Fencing of Sensitive forest areas	7000	0.01	70.00	Chandrapur	Central Chanda	wansadi	wansadi	Narnda	190	N19^{0}46 56.98	E 79^{0}3 45.13
		1	4.50	4.50	Chandrapur	Bramhapuri	South Bramhapuri	Ekara	Ekara	1104, 1105	N20 38 34.65	E079 80 9.45
		1	12.93	12.93	Chandrapur	Bramhapuri	North Bramhapuri	Mendki	Mendki	950	N20°28'30.0"	E079°50'04.0"
		1	24.85	24.85	Chandrapur	Bramhapuri	North Bramhapuri	Bramhapuri	Bramhapui	756/1820	N20 37 25.4	E079 50 43.7
		1	5.00	5.00	Chandrapur	Bramhapuri	Sindewahi	Sindewahi	Lonkhairi	19	N20 12 47.4	E079 44 01.1
		1	8.00	8.00	Chandrapur	Bramhapuri	Sindewahi	Tambegadi Mendh	Maregaon	107	N 20 16 07.3	E079 45 16.3
		1	22.00	22.00	Chandrapur	Bramhapuri	Sindewahi	Nawargaon	Ratnapur	1213	N 20 19 54.2	E079 33 02.8
		1	26.00	26.00	Chandrapur	Bramhapuri	Sindewahi	Gunjewahi	Pawanpar-2	282	N 20 18 11.8	E079 48 11.2
		7.00		**103.28**								
	Total:-	**7007.00**		**173.28**								
iii	Boundry Pillar Class I	34	0.08	2.72	Chandrapur	Chandrapur	Chandrapur	durgapur	durgapur	400	N 20 1.02.14	E 79 16.56.72
		38	0.08	3.04	Chandrapur	Chandrapur	Chandrapur	durgapur	N.Lohara	577	N 19.59.10	E 79.21.52
		28	0.08	2.24	Chandrapur	Chandrapur	Chandrapur	durgapur	Payali Bhatali	880	N 20.06.41.6	E 79.16.10.5
		100		**8.00**	Chandrapur							
		200	0.08	16.00	Chandrapur	Central Chanda	Jiwati	Shengaon	Shengaon Maraipatan	15,96	N19^0 31 32.009	E 79^0 07 17.43
		200	0.08	16.00	Chandrapur	Central Chanda	Jiwati	Shengaon	Nagapur Tekamandwa	256	N19^0 31 41.570	E 79^0 06 21.291
		200	0.08	16.00	Chandrapur	Central Chanda	Jiwati	Shengaon	Shengaon rahapalli	137	N19^0 32 27.842	E 79^0 07 41.714
		600		**48.00**								
	Total:-	**700**		**56.00**								

Works proposed					Location of work						Latlong	
Rule No.	**Item of work**	**Quantity**	**Rate**	**Amount (Rs. in Lakhs**	**Circle**	**Division**	**Range**	**Round**	**Beat**	**Compartment No**	**Latitude**	**Longitude**
1	**2**	**3**	**4**	**5**	**6**	**7**	**8**	**9**	**10**	**11**	**12**	**13**
iv	Boundry Pillar Class I I	34.00	0.04	1.36	Chandrapur	Chandrapur	Chandrapur	durgapur	durgapur	400	N 20 1.02.14	E 79 16.56.72
		5.00	0.04	0.20	Chandrapur	Chandrapur	Chandrapur	durgapur	N.Lohara	576	N 19.59.10	E 79.21.52
		48.00	0.04	1.92	Chandrapur	Chandrapur	Chandrapur	durgapur	Payali Bhatali	877	N 20.06.41.6	E 79.16.10.5
		87.00		**3.48**	Chandrapur							
		100	0.04	4.00	Chandrapur	Central Chanda	Jiwati	Shengaon	Shengaon Maraipatan	15,96	$N19^0$ 31 32.009	E 79^0 07 17.43
		100	0.04	4.00	Chandrapur	Central Chanda	Jiwati	Shengaon	Nagapur Tekamandwa	256	$N19^0$ 31 41.570	E 79^0 06 21.291
		100	0.04	4.00	Chandrapur	Central Chanda	Jiwati	Shengaon	Shengaon rahapalli	137	$N19^0$ 32 27.842	E 79^0 07 41.714
		300.00		**12.00**								
	Total:-	**387.00**		**15.48**								
v	Construction, upgradation and maintenance of Protection camps/Protection Huts/Forest Custody/Labour Shed etc.											
	Protection Huts	1	20.00	20.00	Chandrapur	Central Chanda	Wansadi	Korpana	Mandawa	0	$N19^0$ 44 19	E 79^0 59 32
	Protection Huts	1	20	20.00	Chandrapur	Bramhapuri	Chimur	Shankarpur	Shankarpur	485	N2037.34	E079 33 02
	Protection Huts	1	20	20.00	Chandrapur	Bramhapuri	Chimur	Shankarpur	Doma	470	N20 34.23	E079 31 30
	Protection Huts	1	20	20.00	Chandrapur	Bramhapuri	Chimur	Khadsangi	Khadsangi	15	N20 31 8	E079 18 7
	Protection Huts	1	20	20.00	Chandrapur	Bramhapuri	Chimur	Bhisi	Gadpipari	401	N20 37 47	E079 26 11
	Protection Huts	1	20	20.00	Chandrapur	Bramhapuri	Sindewahi	Sindewahi	Dongergaon	258	N20 20 10.7	E079 4 21.3
		6.00		**120.00**								
	Labour Shed No 2	2	6.00	12.00	Chandrapur	Central Chanda	Kothari	Kothari	Kothari		N 19^0 47 25.36	E079^0 29 28.59
	Labour Shed Zaran Nursary	1	6.00	6.00	Chandrapur	Central Chanda	Kothari	Kothari	Kothari		N 19^0 47 25.31	E079^0 29 28.31
	Labour Shed Karanji	1	6.00	6.00	Chandrapur	Central Chanda	Kothari	Karanji	Karanji		N 19^0 44 10.5	E079^0 38 09.2
		4.00		**24.00**	Chandrapur							
	Total:-	**10.00**		**144.00**								

Works proposed					Location of work						Latlong	
Rule No.	**Item of work**	**Quantity**	**Rate**	**Amount (Rs. in Lakhs**	**Circle**	**Division**	**Range**	**Round**	**Beat**	**Compartment No**	**Latitude**	**Longitude**
1	**2**	**3**	**4**	**5**	**6**	**7**	**8**	**9**	**10**	**11**	**12**	**13**
vi	Establishment and maintenance of wireless networks	1	1.00	1.00	Chandrapur	C'pur	Chichpalli	Chichpalli	Chichpalli	528	N20^{0} 00' 05"	E790 28' 44"
		1	1.00	1.00	Chandrapur	C'pur	Chichpalli	Kelzar	Sandala	559	N19^{0} 51' 01"	E790 34' 05"
		2.00		**2.00**								
vii	Improving mobility of frontline staff for forest protection & patrolling.	LS		2.00	Chandrapur	Chandrapur						
		LS	..	2.00	Chandrapur	Central Chanda						
		LS		2.00	Chandrapur	Bramhapuri						
	Total:-	**0.00**	**0.00**	**6.00**								
	Total for Protection of plantations and forests	**8206.0**		**433.67**								
5(2)(e)	**Pest and disease control in forest**											
5(2)(f)	**Forest fire prevention and control operations**											
i	Cutting and burning of fire lines	1368.902	0.03	40.16	Chandrapur	Central Chanda	Ballarshah ,	Umari	Satara Bho.		N 19^{0} 55 15.981	E79^{0} 32 34.484
					Chandrapur	Central Chanda	Ballarshah ,	Manora	Manora		N 19^{0} 53 40.734	E79^{0} 29 30.697
					Chandrapur	Central Chanda	Ballarshah ,	Karwa	Karwa		N 19^{0}54.12.930	E79^{0} 23 49.954
					Chandrapur	Central Chanda	Ballarshah ,	Kalamna	Kem		N 19^{0}51 48.047	E79^{0} 23 48.612
					Chandrapur	Central Chanda	Kothari	Parsodi	Parsodi		N 19^{0}43 38.396	E79^{0}30 51.187
					Chandrapur	Central Chanda	Kothari	Karnji	Chiwanda		N 19^{0}41 49.734	E79^{0}37 17.542
					Chandrapur	Central Chanda	Jiwati	Patan	Kolandi		N 19^{0}33 21.302	E79^{0}13 22.127
		147.098	0.03	4.41	Chandrapur	Central Chanda	Jiwati	Bhari	Shedwahi		N 19^{0}28 32.877	E79^{0}11 30.782
					Chandrapur	Central Chanda	Wirur	Antargaon	Antargaon 1		N 19^{0}32 45.081	E79^{0}28 46.427
					Chandrapur	Central Chanda	Wirur	Koshtala	Koshtala		N 19^{0}32 15.568	E79^{0}25 21.786
		1331.664	0.03	39.94	Chandrapur	Central Chanda	Wansadi	Pardi	Durgadi		N 19^{0}42 13.881	E78^{0}52 19.767
					Chandrapur	Central Chanda	Wansadi	Pardi	Jambhuldhara		N 19^{0}40 23.877	E78^{0}55 26.237
		2847.66		**84.51**								

Works proposed					Location of work						Latlong	
Rule No.	Item of work	Quantity	Rate	Amount (Rs. in Lakhs	Circle	Division	Range	Round	Beat	Compartment No	Latitude	Longitude
1	2	3	4	5	6	7	8	9	10	11	12	13
i	Cutting and burning of fire lines	12	0.21	0.21	Chandrapur	Bramhapuri	North Bramhapuri	Navegaon	Rampuri	153	N20 26 25.8	E079 47 15.5
		12	0.21	0.21	Chandrapur	Bramhapuri	North Bramhapuri	Navegaon	Rampuri	154	N20 25 14.7	E079 47 41.6
		12	0.21	0.21	Chandrapur	Bramhapuri	North Bramhapuri	Navegaon	Rampuri		N20 27 41.6	E079 48 26.9
		12	0.21	0.21	Chandrapur	Bramhapuri	North Bramhapuri	Navegaon	Navegaon	161	N20 26 21.9	E079 50 22.2
		12	0.21	0.21	Chandrapur	Bramhapuri	North Bramhapuri	Navegaon	Navegaon	178	N20 25 04.3	E079 50 44.3
		12	0.21	0.21	Chandrapur	Bramhapuri	North Bramhapuri	Navegaon	Navegaon		N20 26 16.9	E079 49 47.2
		12	0.21	0.21	Chandrapur	Bramhapuri	North Bramhapuri	Navegaon	Kalamgaon	163	N20 25 51.5	E079 51 41.2
		12	0.21	0.21	Chandrapur	Bramhapuri	North Bramhapuri	Navegaon	Murpar	164	N20 24 23.8	E079 51 08.7
		12	0.21	0.21	Chandrapur	Bramhapuri	North Bramhapuri	Navegaon	Murpar	207	N20 24 48.3	E079 51 51.2
		12	0.21	0.21	Chandrapur	Bramhapuri	North Bramhapuri	Navegaon	Koregaon Rith	157	N20 26 05.5	E079 49 06.1
		12	0.21	0.21	Chandrapur	Bramhapuri	North Bramhapuri	Navegaon	Koregaon Rith	158	N20 25 52.4	E079 49 28.7
		12	0.21	0.21	Chandrapur	Bramhapuri	Chimur	Shankarpur	Shankarpur	485	N20 37 43	E079 33 07
		12	0.21	0.21	Chandrapur	Bramhapuri	Chimur	Shankarpur	Shankarpur	486	N20 37 26	E079 34 10
		12	0.21	0.21	Chandrapur	Bramhapuri	Chimur	Shankarpur	Shankarpur	487	N20 38 24	E079 35 11
		12	0.21	0.21	Chandrapur	Bramhapuri	Chimur	Shankarpur	Doma	474	N20 35 15	E079 32 19
		12	0.21	0.21	Chandrapur	Bramhapuri	Chimur	Shankarpur	Doma	470	N20 35 08	E079 32 19
		12	0.21	0.21	Chandrapur	Bramhapuri	Chimur	Shankarpur	Navtala	468	N20 32 50	E079 31 35
		12	0.21	0.21	Chandrapur	Bramhapuri	Chimur	Shankarpur	Navtala	475, 476, 477	N20 32 11	E079 32 17
		12	0.21	0.21	Chandrapur	Bramhapuri	Chimur	Shankarpur	Doma	482	N20 36 41	E079 31 54
		12	0.21	0.21	Chandrapur	Bramhapuri	Chimur	Shankarpur	Doma	483	N20 36 53 E079 31 37	E079 31 37
		12	0.21	0.21	Chandrapur	Bramhapuri	Chimur	Shankarpur	Shankarpur		N20 37 00	E079 32 13
		12	0.21	0.21	Chandrapur	Bramhapuri	Chimur	Shankarpur	Doma		N20 32 26	E079 30 51
		12	0.21	0.21	Chandrapur	Bramhapuri	Chimur	Shankarpur	Navtala		N20 32 24	E079 27 00
		12	0.21	0.21	Chandrapur	Bramhapuri	Chimur	Shankarpur	Doma		N20 32 24	E079 31 19
		12	0.21	0.21	Chandrapur	Bramhapuri	Chimur	Shankarpur	Doma		N20 33 26	E079 30 55
		12	0.21	0.21	Chandrapur	Bramhapuri	Chimur	Shankarpur	Doma		N20 35 27	E079 31 56
		12	0.21	0.21	Chandrapur	Bramhapuri	Chimur	Shankarpur	Doma		N20 35 17	E079 30 03
		12	0.21	0.21	Chandrapur	Bramhapuri	Chimur	Shankarpur	Shankarpur		N20 37 39	E079 32 05

Works proposed					Location of work						Latlong	
Rule No.	Item of work	Quantity	Rate	Amount (Rs. in Lakhs	Circle	Division	Range	Round	Beat	Compartment No	Latitude	Longitude
1	2	3	4	5	6	7	8	9	10	11	12	13
i	Cutting and burning of fire lines	12	0.21	0.21	Chandrapur	Bramhapuri	Chimur	Shankarpur	Doma	459, 461, 474	N20 34 42	E079 31 50
		12	0.21	0.21	Chandrapur	Bramhapuri	Chimur	Bhisi	Bhisi	378	N20 22 40	E079 18 17
		12	0.21	0.21	Chandrapur	Bramhapuri	Chimur	Bhisi	Gadpipari	404, 405	N20 38 32	E079 27 43
		12	0.21	0.21	Chandrapur	Bramhapuri	Chimur	Bhisi	Gadpipari	412	N20 38 57	E079 29 39
		12	0.21	0.21	Chandrapur	Bramhapuri	Chimur	Bhisi	Gadpipari	401	N20 29 40	E079 37 58.21
		12	0.21	0.21	Chandrapur	Bramhapuri	Chimur	Bhisi	Bhisi	378	N20 37 43	E079 33 07
		12	0.21	0.21	Chandrapur	Bramhapuri	Chimur	Bhisi	Bhisi	377	N20 38 46	E079 21 55
		12	0.21	0.21	Chandrapur	Bramhapuri	Chimur	Bhisi	Bhisi	12(RF)	N20 34 39	E079 19 21
		6	0.15	0.15	Chandrapur	Bramhapuri	Chimur	Bhisi	Bhisi	374	N20 36 6	E079 20 8
		6	0.15	0.15	Chandrapur	Bramhapuri	Chimur	Bhisi	Bhisi	377	N20 38 25.09	E079 22 14.07
		6	0.15	0.15	Chandrapur	Bramhapuri	Chimur	Bhisi	Gadpipari	404	N20 38 16.05	E079 27 35.5
		6	0.15	0.15	Chandrapur	Bramhapuri	Chimur	Bhisi	Gadpipari	412	N20 37 20.5 E079 29 39.1	E079 29 39.1
		6	0.15	0.15	Chandrapur	Bramhapuri	Chimur	Bhisi	Gadpipari	412	N20 37 28.0	E079 29 30.7
		6	0.15	0.15	Chandrapur	Bramhapuri	Chimur	Bhisi	Bhisi	378	N20 38 23.6	E079 21 49.8
		20	0.35	0.35	Chandrapur	Bramhapuri	Chimur	Bhisi	Navegaon	12(PF)	N20 34 40	E079 19 22
		20	0.35	0.35	Chandrapur	Bramhapuri	Chimur	Bhisi	Navegaon	12(PF)	N20 34 41	E079 19 23
		20	0.35	0.35	Chandrapur	Bramhapuri	Chimur	Bhisi	Bhisi	29(PF)	N20 37 50	E079 21 38
		20	0.35	0.35	Chandrapur	Bramhapuri	Chimur	Bhisi	Bhisi	377(PF)	N20 38 25	E079 22 29
		20	0.35	0.35	Chandrapur	Bramhapuri	Chimur	Bhisi	Bhisi	374(PF)	N20 36 00	E079 19 48
		20	0.35	0.35	Chandrapur	Bramhapuri	Chimur	Bhisi	Bhisi	378(PF)	N20 38 22	E079 21 35
		20	0.35	0.35	Chandrapur	Bramhapuri	Chimur	Bhisi	Gadpipari	401	N20 37 59	E079 25 54
		20	0.35	0.35	Chandrapur	Bramhapuri	Chimur	Bhisi	Gadpipari	403	N20 38 18	E079 26 36
		20	0.35	0.35	Chandrapur	Bramhapuri	Chimur	Bhisi	Gadpipari	404	N20 37 56	E079 27 11
		20	0.35	0.35	Chandrapur	Bramhapuri	Chimur	Bhisi	Gadpipari	408	N20 37 39	E079 29 20
		20	0.35	0.35	Chandrapur	Bramhapuri	Chimur	Bhisi	Gadpipari	412	N20 37 46	E079 30 01
		20	0.35	0.35	Chandrapur	Bramhapuri	Chimur	Bhisi	Gadpipari	30(PF)	N20 37 30 E	E079 26 34
		20	0.35	0.35	Chandrapur	Bramhapuri	Chimur	Bhisi	Gadpipari	31(PF)	N20 37 30	E079 27 05
		728		**13.01**								
	Total:-	**3576**		**97.52**								

Works proposed					Location of work						Latlong	
Rule No.	**Item of work**	**Quantity**	**Rate**	**Amount (Rs. in Lakhs**	**Circle**	**Division**	**Range**	**Round**	**Beat**	**Compartment No**	**Latitude**	**Longitude**
1	**2**	**3**	**4**	**5**	**6**	**7**	**8**	**9**	**10**	**11**	**12**	**13**
ii	Fire watchers	2340	0.004	10.460	Chandrapur	Central Chanda	Wansadi	Pardi	Durgadi		N $19^0$42 13.881	E$78^0$52 19.767
					Chandrapur	Central Chanda	Wansadi	Pardi	Jambhuldhara		N $19^0$40 23.877	E$78^0$55 26.237
					Chandrapur	Central Chanda	Pombhurna	Pombhurana	Kemara		N $19^0$49 09.749	E$79^0$35 58.393
					Chandrapur	Central Chanda	Pombhurna	Pombhurana	Ghanoti		N $19^0$49 59.385	E$79^0$34 21 21.804
					Chandrapur	Central Chanda	Pombhurna	Pombhurana	Pombhurana		N $19^0$50 34.264	E$79^0$37 02.786
					Chandrapur	Central Chanda	Pombhurna	Pombhurana	Chintaldhaba		N $19^0$48 54.982	E$79^0$38.24.618
					Chandrapur	Central Chanda	Rajura	Rajura	Sumthana		N $19^0$44 24.004	E$79^0$19 39.091
					Chandrapur	Central Chanda	Rajura	Tembhurwahi	Tulana		N $19^0$43 34.372	E$79^0$23 32.514
					Chandrapur	Central Chanda	Rajura	Vihirgaon	Vihirgaon		N $19^0$44 25.349	E$79^0$28 19.597
					Chandrapur	Central Chanda	Dhaba	Dhaba	Wedgaon		N $19^0$33 53.498	E$79^0$34 49.976
					Chandrapur	Central Chanda	Dhaba	Gondpipari	Gojoli		N $19^0$40 26.560	E$79^0$39 29.010
		92	0.42	38.25	Chandrapur	Bramhapuri						
	Total:-	**2432**		**48.71**								
	Total for Forest fire prevention and control operations	**6008**		**146.23**								
	Total for Forest Protection	**14214**		**579.90**								
5(2)(g)	Soil and moisture conservation works in the forest											
ii	Construction of Cement Bandhare	1	15.00	15.00	Chandrapur	Bramhapuri	Talodhi	Neri	Gondoda	27	N20.386985	E079.476405
iv	Creation of Forest ponds/Vantale/Khodtadi	1	3.00	3.00	Chandrapur	Bramhapuri	Nagbhid	Mindhala	Mindala		N20 38 51.4	E079 45 19.8
		1	3.00	3.00	Chandrapur	Bramhapuri	Nagbhid	Mindhala	Mindala		N20 28 35.2	E079 25 35.2
		1	3.00	3.00	Chandrapur	Bramhapuri	Nagbhid	Mindhala	Mindala		N20 34 51.4	E079 36 42.5
		1	3.00	3.00	Chandrapur	Bramhapuri	Nagbhid	Mindala	Masli		N20 39 42.7	E079 31 34.7
		1	3.00	3.00	Chandrapur	Bramhapuri	Nagbhid	Mindala	Paharni		N20 30 42.8	E079 36 45.7
		1	3.00	3.00	Chandrapur	Bramhapuri	Nagbhid	Mindala	Paharni		N20 38.2	E079 41 31.4

Works proposed					Location of work						Latlong	
Rule No.	**Item of work**	**Quantity**	**Rate**	**Amount (Rs. in Lakhs**	**Circle**	**Division**	**Range**	**Round**	**Beat**	**Compartment No**	**Latitude**	**Longitude**
1	**2**	**3**	**4**	**5**	**6**	**7**	**8**	**9**	**10**	**11**	**12**	**13**
iv	Creation of Forest ponds/Vantale/Khodtadi	1	3.00	3.00	Chandrapur	Bramhapuri	Nagbhid	Mindala	Paharni		N20 32 34.6	E079 39 55.7
		1	3.00	3.00	Chandrapur	Bramhapuri	Nagbhid	Mindala	Paharni		N20 39 46.7	E079 36 50.1
		1	3.00	3.00	Chandrapur	Bramhapuri	Chimur	Shankarpur	Shankarpur	486	N20 37.27	E079 34 36
		1	3.00	3.00	Chandrapur	Bramhapuri	Chimur	Shankarpur	Doma	474	N20 35.08	E079 32 16
		1	3.00	3.00	Chandrapur	Bramhapuri	Chimur	Bhisi	Navegaon	12 (RF)	N20 34 41	E079 18 04
		1	3.00	3.00	Chandrapur	Bramhapuri	Chimur	Bhisi	Navegaon	12 (RF)	N20 34 24	E079 18 33
		1	3.00	3.00	Chandrapur	Bramhapuri	Chimur	Bhisi	Navegaon	12 (RF)	N20 34 39	E079 19 02
		1	3.00	3.00	Chandrapur	Bramhapuri	Sindewahi	Navargaon	Pendhari	229/575	N20 22 54.93	E079 31 30.45
		1	3.00	3.00	Chandrapur	Bramhapuri	Sindewahi	Navargaon	Navargaon-2	239	N20 21 23.0	E079 31 00.0
		1	3.00	3.00	Chandrapur	Bramhapuri	Sindewahi	Navargaon	Navargaon-2	239	N20 23 16.0	E079 31 42.0
		1	3.00	3.00	Chandrapur	Bramhapuri	Sindewahi	Navargaon	Navargaon-2	228	N20 23 17.00	E079 31 52.00
		1	3.00	3.00	Chandrapur	Bramhapuri	Sindewahi	Navargaon	Ratnapur	1208	N20 21 09.3	E079 32 22.5
		1	3.00	3.00	Chandrapur	Bramhapuri	Sindewahi	Navargaon	Ratnapur	1191	N20 21 20.8	E079 30 04.0
		1	3.00	3.00	Chandrapur	Bramhapuri	Sindewahi	Navargaon	Nachanbhatti	1227	N20 19 15.9	E079 34 15.0
		1	3.00	3.00	Chandrapur	Bramhapuri	Sindewahi	Navargaon	Nachanbhatti	1224	N20 19 29.1	E079 34 40.3
		1	3.00	3.00	Chandrapur	Bramhapuri	Sindewahi	Navargaon	Nachanbhatti	1244	N20 16 45.8	E079 35 58.3
		1	3.00	3.00	Chandrapur	Bramhapuri	Sindewahi	Tambegadi Mendha	Chikmara	1835	N20 13 38.6	E079 46 54.2
		1	3.00	3.00	Chandrapur	Bramhapuri	Sindewahi	Tambegadi Mendha	Murpar	1326P	N20 14 57.8	E079 43 17.1
		1	3.00	3.00	Chandrapur	Bramhapuri	Sindewahi	Sindewahi	Lonkhairi	247	N20 21 34.1	E079 67 52.3
		20	3.00	60.00	Chandrapur	Central Chanda						
		45		**135.00**								
	Total for SMC works	**46**		**150.00**	**0.00**							

Works proposed					Location of work						Latlong	
Rule No.	**Item of work**	**Quantity**	**Rate**	**Amount (Rs. in Lakhs**	**Circle**	**Division**	**Range**	**Round**	**Beat**	**Compartment No**	**Latitude**	**Longitude**
1	**2**	**3**	**4**	**5**	**6**	**7**	**8**	**9**	**10**	**11**	**12**	**13**
	Wildlife Management & Man-animal conflict mitigation											
5(2)(k)	**Establishment, operation and maintenance of animal rescue centre and veterinary treatment facilities for wild animals**											
iii	Animal seizing & capturing devices	5	0.50	2.50	Chandrapur	Central Chanda	Dn.Office				N $19^0$58 2.67	E$79^0$18 8.30
iv	Rescue emergency operations	LS		5.00	Chandrapur	Central Chanda	Dn.Office				N $19^0$58 2.67	E$79^0$18 8.30
v	Strengthening of Rapid rescue teams	1	1.00	1.00	Chandrapur	Central Chanda	Kothari	Kothari	Kothari		N 19^0 47 25.31	E079^0 29 28.31
		0.00	LS	10.00	Chandrapur	Bramhapuri						
	Total			**18.50**								
	Total for Wildlife Management & Man-animal conflict mitigation	**0.00**		**18.50**								
	Grand Total for Activities under not less than 80% component	**14864.66**		**956.55**								
5 (3)	**Works under not more than 20 % component (Rule 5 (3))**											
5(3)(d)	**Construction, up-gradation and maintenance of inspection paths, forest roads in forest area, fire lines, watch towers, check posts and timber depots**											
	watch towers,	1	10.00	10.00	Chandrapur	Bramhpauri	Talodhi	Talodhi	Gangasagar Heti	90	N20 24 29.0	E079 42 49.2
		1	10.00	10.00	Chandrapur	Bramhpauri	Chimur	Shankarpur	Shankarpur	485	N20 37.30	E 079 33 07
		2.00		**20.00**								
	Foret Road (Mendki to Gaidongari)	5		3.00	Chandrapur	Bramhpauri	North Bramhapuri	Mendki	Mendki	950	N20 29 31.0	E079 50 00.0
	Total:-	**7.00**		**23.00**								
5(3)(e)	**Construction of residential and official buildings in forests for front line staffs deployed for protection of forest and wildlife**											
i	Construction of Type I Quarters	1	22.00	22.00	Chandrapur	Chandrapur	Saoli	Vyahad	samda		N20 06' 2.25"	E 079' 56' 5.95"
		1	22.00	22.00	Chandrapur	Chandrapur	Chichpalli	Chichpalli	Chichpalli		N20^0 00'04.1"	E79028'38.8"
		2.00		**44.00**								

Works proposed					Location of work						Latlong	
Rule No.	**Item of work**	**Quantity**	**Rate**	**Amount (Rs. in Lakhs**	**Circle**	**Division**	**Range**	**Round**	**Beat**	**Compartment No**	**Latitude**	**Longitude**
1	**2**	**3**	**4**	**5**	**6**	**7**	**8**	**9**	**10**	**11**	**12**	**13**
i	Construction of Type I Quarters	1	22	22.00	Chandrapur	Bramhapuri	Talodhi	Govindpur	Yenoli (Mal)		N20 28 08.0	E079 35 43.0
		1	22	22.00	Chandrapur	Bramhapuri	Nagbhid	Dongergaon	Dongergaon	250	N20 36 10.1	E079 39 16.8
		2.00		**44.00**								
		1	22.00	22.00	Chandrapur	Central Chanda	Wansadi	Korpana	Mandawa		$N19^0$ 41 48.869"	$E79^0$ 57 01.364"
		1	22.00	22.00	Chandrapur	Central Chanda	Wirur	Dewada	Dewada		$N19^0$ 37 05.035"	$E79^0$ 18 00.963"
		2		**44.00**								
	Total:-	**6**		**132.00**								
ii	Construction of Type II Quarters	1	26.00	26.00	Chandrapur	Chandrapur	Chichpalli	Kelzer	Kelzer		$N19^0$ 58'51.3"	E79034'06.6"
		1	26	26.00	Chandrapur	Bramhapuri	Talodhi	Talodhi	Talodhi		N20.43964	E079.66487
		1	26.00	26.00	Chandrapur	Central Chanda	Dhaba	Tohgaon	Lathi		N19 33.33"	E79 30.25"
	Total:-	**3**		**78.00**								
v	Amenities for Woman Front line staff	1	14.00	14.00	Chandrapur	Bramhapuri	Sindewahi	Sindewahi	Lonwahi	Abadi	N20 17 39.3	E079 40 09.0
	Total New Constructions	**10**		**224.00**	**0.00**							
5(3)(i)	Publicity-cum-awareness programme and exhibition on the various schemes being implemented by the State Authority from State Fund (including Nature Awareness Program conduct by METDB)	LS		2.00	Chandrapur	Chandrapur						
		LS		2.00	Chandrapur	Central Chanda						
		LS	0	2.00	Chandrapur	Bramhapuri						
	Total:-	**0.00**	**0.00**	**6.00**								
	Total for works under not more than 20% component			**253.00**								
	Grand Total for NPV			**1209.55**								

ANNUAL PLAN OF OPERATIONS 2022-23

FORMAT VII A---- Forestry and other activities proposed under Net Present Value amount (Please see Rule no. 5(2), 5(3), and proviso under Rule 5(3) (NPV - 04)

Dhule Territorial Circle

Works proposed					Location of work						Latlong	
Rule No.	**Item of work**	**Quantity**	**Rate**	**Amount (Rs. in Lakhs**	**Circle**	**Division**	**Range**	**Round**	**Beat**	**Compartment No**	**Latitude**	**Longitude**
1	**2**	**3**	**4**	**5**	**6**	**7**	**8**	**9**	**10**	**11**	**12**	**13**
5 (2)	**Works under Not less than 80 % component (Rule 5 (2))**	--	--	--	--	--	--	--	--	--	--	--
5(2)(b)	**Artificial Regeneration**	--	--	--	--	--	--	--	--	--	--	--
ii	4th YO Works	55.00	0.18	9.90	Dhule	Dhule	Dhule	Arvi	Purmepada	336	N20.686504	E74.718216
		25.00	0.18	4.50	Dhule	Dhule	Dhule	Borvihir	Shirud	Gat No.149	N20.72237	E74.94296
		15.00	0.18	2.70	Dhule	Dhule	Shindkheda	Shindkheda	Shindkheda	19, 34, 463	N 21.15362	E74.4958
		20.00	0.18	3.60	Dhule	Dhule	Shindkheda	Shindkheda	Shindkheda	272	N 21.153	E74.44652
		30.00	0.18	5.40	Dhule	Dhule	Sakri	Mhasale	Ghanegaon	348	N 21 109 607	E074 461 672
		30.00	0.18	5.40	Dhule	Dhule	Sakri	Mhasale	Ghanegaon	348	N21 084 113	E074 457 503
		25.00	0.18	4.50	Dhule	Dhule	Pimpalner	Dang shirvade	Dhamandhar	212	N20 51.618	E74 03.096
		200.00		**36.00**								
		25	0.18	4.50	Dhule	Nandurbar	Navapur	Khekada	Thuwa	48	N 21 06 750	E 73 42 210
		20	0.18	3.60	Dhule	Nandurbar	Bilgaon	Mal	Bori	2,20,221	N 21 52 282	E 74 18 035
		20	0.18	3.60	Dhule	Nandurbar	Bilgaon	Bhushya	Savrya	44	N 21 55 851	E 74 18 714
		25	0.18	4.50	Dhule	Nandurbar	Nandurbar	Nandarkhe	Thanpada 2	138	N 21 14 748	E 74 14 507
		20	0.18	3.60	Dhule	Nandurbar	Nandurbar	Nandarkhe	Thanpada 1	139	N 21 14 277	E 74 15 059
		20	0.18	3.60	Dhule	Nandurbar	Chinchpada	Sonkhamb	Sonkhamb	1	N 21 07 315	E 74 05 654
		25	0.18	4.50	Dhule	Nandurbar	Chinchpada	Khandbara	Devalipada	110	N 21 11 992	E 74 04 276
		25	0.18	4.50	Dhule	Nandurbar	Shahada	Mandana	Dudhakheda	586	N 21 33 292	E 74 38 321
		20	0.18	3.60	Dhule	Nandurbar	Kakrada	Kakrada	Khambala	310	N 21 46 404	E 74 21 744
		200		**36**								

Works proposed					Location of work						Latlong	
Rule No.	Item of work	Quantity	Rate	Amount (Rs. in Lakhs	Circle	Division	Range	Round	Beat	Compartment No	Latitude	Longitude
1	2	3	4	5	6	7	8	9	10	11	12	13
ii	4th YO Works	25	0.18	4.50	Dhule	Mewasi	Akkalkuwa	Amli	Iichhagavan	403	N21.3815.09	E74.0403.4
		25	0.18	4.50	Dhule	Mewasi	Akkalkuwa	Amli	Kundwa	401	N21.38.11.1	E74.0318.3
		25	0.18	4.50	Dhule	Mewasi	Akkalkuwa	Amlibari	Kankalamal	181	N21.4100.6	E74.0518.6
		10	0.18	1.80	Dhule	Mewasi	Akkalkuwa	Ankushvihir	Kolvimal	153	N21.3601.8	E73.5805.4
		15	0.18	2.70	Dhule	Mewasi	Akkalkuwa	Sojdan	Mal	177	N21.3746.6	E74.0707.7
		10	0.18	1.80	Dhule	Mewasi	Khapar	Raishingpur	Chikhli	81	N21.3936.5	E73.5405.4
		12	0.18	2.16	Dhule	Mewasi	Khapar	Raishingpur	Gojrabari	161	N21.3731.9	E73.5586.6
		20	0.18	3.60	Dhule	Mewasi	Khapar	Kothali	Oghani	80	N21.4107.2	E74.5535.3
		15	0.18	2.70	Dhule	Mewasi	Molgi	Molgi	Bardi	55	N21.4526.4	E73.5618.2
		20	0.18	3.60	Dhule	Mewasi	Molgi	Jamana	Saalibar	109	N21.4351.6	E74.0514.07
		10	0.18	1.80	Dhule	Mewasi	Molgi	Molgi	Vehagi	86	N21.4349.5	E73.5635.4
		15	0.18	2.70	Dhule	Mewasi	Molgi	Molgi	Khodsbar	47	N21.4640.9	E73.5813.3
		202		**36.36**								
		25	0.18	4.50	Dhule	Jalgaon	Vadoda	Dolarkheda	Pimpri puncham	536	N21 06.304	E76 06.557
		25	0.18	4.50	Dhule	Jalgaon	M.nagar	Ruikheda	Amadgaon	523/15	N20 57 51.9	E76 01 35.0
		25	0.18	4.50	Dhule	Jalgaon	Jalgaon	Vitner	Vitner	441/22	N20 49 08.7	E75 34 31.8
		25	0.18	4.50	Dhule	Jalgaon	Erandol	Padmalay	S.Padmalay	394/3,4	N20 51 48.6	E75 21 56.7
		15	0.18	2.70	Dhule	Jalgaon	Erandol	Padmalay	S.Padmalay	398/17	N20 53 29.7	E75 22 54.9
		10	0.18	1.80	Dhule	Jalgaon	Erandol	Rajwad	Rajwad	385/13	N20 55 03.6	E75 11 24.5
		25	0.18	4.50	Dhule	Jalgaon	Parola	Amalner	Mahindale	355	N20 57 12.2	E74 58 02.5
		25	0.18	4.50	Dhule	Jalgaon	Parola	Amalner	Mahindale	355	N20 56 59.0	E74 57 43.5
		15	0.18	2.70	Dhule	Jalgaon	Chalisgaon	Juwardi	Kunzar	337/5	N20 42 36.8	E75 02 06.0
		10	0.18	1.80	Dhule	Jalgaon	Chalisgaon	Ghodegaon	Upkhed	318/2	N20 34 37.1	E74 50 40.6
		200		**36.00**								

Works proposed					Location of work						Latlong	
Rule No.	**Item of work**	**Quantity**	**Rate**	**Amount (Rs. in Lakhs**	**Circle**	**Division**	**Range**	**Round**	**Beat**	**Compartment No**	**Latitude**	**Longitude**
1	**2**	**3**	**4**	**5**	**6**	**7**	**8**	**9**	**10**	**11**	**12**	**13**
ii	4th YO Works	25.00	0.18	4.50	Dhule	Yawal	Chopda	Lasur	Lasur	286	N21.31681	E75.17988
		25.00	0.18	4.50	Dhule	Yawal	Vaijapur	Kharyapadav	Gauryapadav	245	N21.40422	E75.26881
		25.00	0.18	4.50	Dhule	Yawal	Vaijapur	Kharyapadav	Kharyapadav West	244-2	N21.40719	E75.29538
		25.00	0.18	4.50	Dhule	Yawal	Vaijapur	Kharyapadav	Kharyapadav West	244-1	N21.40885	E75.29031
		25.00	0.18	4.50	Dhule	Yawal	Adawad	Bormali	Ghodachapar	204	N21.33833	E75.44643
		25.00	0.18	4.50	Dhule	Yawal	Raver	Ahirwadi	Gangapuri	1	N21.36384	E76.09839
		25.00	0.18	4.50	Dhule	Yawal	Yawal East	Faijpur	Borkheda Bk	35	N21.25227	E75.84131
		25.00	0.18	4.50	Dhule	Yawal	Yawal West	Jamnya	North Ghodapani	96	N21.35254	E75.72992
	Total	**200**		**36.00**								
	Total 4th Y.O.	**1002**		**180.36**								
	Total Artificail reg.	**1002**		**180.36**								
ii	Plantation along rever banks (as per ICFRE DPR) (National Authority Scheme)	LS	--	30.00	Dhule	Nandurbar	--	--	--	--	--	--
		LS		30.00	Dhule	Mewasi	--	--	--	--	--	--
	Total			60.00								
iv	**Gramvan Plantation (Manitainance)**											
	4th YO	20	18200.00	3.64	Dhule	Jalgaon	Jalgaon	Subhashwadi	Subhashwadi	437/2	N20 47 51.3	E75 32 33.9
		30	18200.00	5.46	Dhule	Jalgaon	Parola	Tarwade	Tarwade	362	N20 44 12.9	E75 07 18.9
	Total	**50.00**	**36400.00**	**9.10**								
	Total for Artificial Regeneration	**1052.00**		**249.46**								
5(2)(c)	**Silvicultural operations in forests**	0	--	0.00	--	--	--	--	--	--	--	--
i	**Fodder Development (PPO Works)**	20	2.28	45.60	Dhule	Jalgaon	Vadoda	Kurha	Morzira	567	N21 03 .39	E 76 17 .615

Works proposed					Location of work						Latlong	
Rule No.	Item of work	Quantity	Rate	Amount (Rs. in Lakhs	Circle	Division	Range	Round	Beat	Compartment No	Latitude	Longitude
1	2	3	4	5	6	7	8	9	10	11	12	13
ii	**Fodder Development (SYO Works)**	25	0.73	18.25	Dhule	Jalgaon	Parola	Chorwad	Chorwad	373/A/II	N20 48.124	E75 12.112
		25	0.73	18.25	Dhule	Jalgaon	Parola	Amalner	Mahindale	356/II	N20 57.57	E74 57.26
		15	0.73	10.95	Dhule	Jalgaon	Chaligaon	Juwardi	Shivare	339/II	N20 42 23.8	E75 02 18.3
		10	0.73	7.30	Dhule	Jalgaon	Jamner	Fattepur	Nandra Haveli	478/I	N20 43 44.1	E75 54 08.4
		10	0.73	7.30	Dhule	Jalgaon	Pachora	Bhadgaon	Palaskheda	365/II	N20 44 37.1	E75 11 19.9
		25	0.73	18.25	Dhule	Jalgaon	Muktainagar	Kurha	Kurha East	496/II	N20.5595	E75.4511
		25	0.73	18.25	Dhule	Jalgaon	Muktainagar	Kurha	Kurha East	497/I	N20.9284	E75.7788
		25	0.73	18.25	Dhule	Jalgaon	Jalgaon	Jalgaon	Shirsoli	412/II	N20 53 38.4	N20 53 38.4
		25	0.73	18.25	Dhule	Jalgaon	Parola	Chorwad	Chorwad	373/A/I,II	N20 48.124	N20 48.124
		25	0.73	18.25	Dhule	Jalgaon	Parola	Mondhala	Dalvel	342/II	N20 48 10.7	N20 48 10.7
		20	0.73	14.60	Dhule	Jalgaon	Vadoda	Kurha	Vadoda East	563	N21 02.282	N21 02.282
		20	0.73	14.60	Dhule	Jalgaon	Vadoda	Kurha	Rajura	558	N21 03.125	N21 03.125
		20	0.73	14.60	Dhule	Jalgaon	Vadoda	Charthana	Charthana	554	N21 03.520	N21 03.520
		20	0.73	14.60	Dhule	Jalgaon	Vadoda	Charthana	Wayala	549	N21 03.350	N21 03.350
		20	0.73	14.60	Dhule	Jalgaon	Vadoda	Dolarkheda	Dolarkheda	544	N21 04 04.4	N21 04 04.4
	Total SYO	**310**		**226.30**								
	Total Foder	**330**		**271.90**								
--	**Forest Protection**	--	--	--	--	--	--	--	--	--	--	--
5(2)(d)	**Protection of plantations and forests**	0	--	0.00	--	--	--	--	--	--	--	--
i	**Encroachment removal & Forest Protection**	25	25000	6.25	Dhule	Nandurbar	Shahada	Shahana	Langdibhani	5,72,573	N 21 63 13	E 74 75 41
		25	25000	6.25	Dhule	Nandurbar	Nandurbar egs	Khandbara	Devmogra	16,18	N 21 30 82	E 73 96 54
		25	25000	6.25	Dhule	Nandurbar	Nandurbar egs	Khandbara	Borchak	36	N 21 43 99	E 74 01 58
		25	25000	6.25	Dhule	Nandurbar	Nandurbar egs	Khandbara	Sonpada	26,29	N 21 39 84	E 74 02 57
		25	25000	6.25	Dhule	Nandurbar	Nandurbar egs	Bhangada	Chimanipada	4,6	N 21 34 02	E 74 04 14
		25	25000	6.25	Dhule	Nandurbar	Nandurbar egs	Bhangada	Vasalai	3	N 21 34 01	E 74 04 18
		25	25000	6.25	Dhule	Nandurbar	Nandurbar egs	Bhangada	Bhangada	30,31,32	N 21 43 93	E 74 01 44
		175		**43.75**								
		20	0.60	12.00	Dhule	Jalgaon	Jamner	Palskheda	Palaskheda	469	20 41 55 .11 N	E75 59 11 .82
	Total Encrochmet remove	**195**		**55.75**								

Works proposed					Location of work						Latlong	
Rule No.	Item of work	Quantity	Rate	Amount (Rs. in Lakhs	Circle	Division	Range	Round	Beat	Compartment No	Latitude	Longitude
1	2	3	4	5	6	7	8	9	10	11	12	13
ii	**Survey, Demarcation & Fencing of Sensitive forest areas**											
		1000	1000 rmt	23.00	Dhule	Nandurbar	Nandurbar egs	Khandbara	Bardipada	19/A	N 21 17 53	E 73 2 45
		1000	1000 rmt	23.00	Dhule	Nandurbar	Chinchpada	Kamod	Chinchpada	73/1	N 21 11 29	E 73 54 55
		1500	1500 rmt	34.50	Dhule	Nandurbar	Nandurbar egs	Khandbara	Khandbara	-	N 23 30 87	E 74 04 04
	Total S& D	**3500**		**80.50**								
iii	**Boundry Pillar Class I**											
		1830	0.08	146.40	Dhule	Nandurbar	9 Range	31 Round	110 Beat	567	N21 257.99	E 76 16 44.22
		920	0.08	73.60	Dhule	Nandurbar	9 Range	31 Round	110 Beat	512	N20 54 07.84	E 75 56 29.99
		300	0.08	24.00	Dhule	Jalgaon	Muktainagar & Vadoda	All	All	508, 590 H	N20 55 22.87	E75 53 46.58
										511, 510 pt	N20 5512.14	E75 55 33.49
										549 , 566	N21 34.92	E 76.12.35
										567	N21 257.99	E 76 16 44.22
	Total Pillar	**3050**		**244.00**								
iv	**Boundry Pillar Class I I**	1210	0.04	48.40	Dhule	Nandurbar	9 Range	31 Round	110 Beat	567	N 21 257.99	E76 16 44.22
		590	0.04	23.60	Dhule	Nandurbar	9 Range	31 Round	110 Beat	512	N20 54 07.84	E 75 56 29.99
		300	0.04	12.00	Dhule	Jalgaon	Muktainagar & Vadoda	All	All	510	N 54 02 70	E 75 55 16.87
										509, 506	N 20 54 16.18	E 75 54 19.15
										569	N21 02 27.33	E 76 13 48.93
	Total Pillar	**2100**		**84.00**								
v	**Construction, upgradation and maintenance of**											
v	**Protection Hut**	1	20.00	20.00	Dhule	Dhule	Shindkheda	Shindkheda	Shindkheda		N21.15578	E74.44846
		1	20.00	20.00	Dhule	Dhule	Sakri	Sakri	Sakri		N20.59492	E74.16841
		1	20.00	20.00	Dhule	Dhule	Sangvi	Sangvi	Sangvi		N21.474545	E74.997392
		1	20	20.00	Dhule	Nandurbar	Shahada	Shahada	Shahada	129	N 21 31 35	E 74 28 33
	Construction of Labour Shed / Protection Camps	1	6.00	6.00	Dhule	Dhule	Shirpur	Wadi	Chandsurya		N21.29325	E74.52186
		1	6.00	6.00	Dhule	Dhule	Boradi	Boradi	Boradi		N21.52522	E74.90363
--	**Total**	**6**		**92.00**	--	--	--	--	--	--	--	--

Works proposed					Location of work						Latlong	
Rule No.	Item of work	Quantity	Rate	Amount (Rs. in Lakhs	Circle	Division	Range	Round	Beat	Compartment No	Latitude	Longitude
1	2	3	4	5	6	7	8	9	10	11	12	13
vi	**Establishment and maintenance of wireless networks**											
		1	50000	0.50	Dhule	Nandurbar	Toranmal	Toranmal	Toranmal west	S.No 3		
		1	50000	0.50	Dhule	Nandurbar	Toranmal	Ranipur	Ranipur	517		
		1	50000	0.50	Dhule	Nandurbar	Navapur	Vadkalmbi	Karanji	G.No 283		
		1	50000	0.50	Dhule	Nandurbar	Navapur	Borzar	Borzar	G.No 222		
		1	50000	0.50	Dhule	Nandurbar	Shahada	Dara	Dara	525		
		1	50000	0.50	Dhule	Nandurbar	Shahada	Mandana	Mandana	G.No 42		
		1	50000	0.50	Dhule	Nandurbar	Shahada	Dara	Dara	Div. Office		
		1	50000	0.50	Dhule	Nandurbar	Shahada	Shahana	Shahana	554		
		1	50000	0.50	Dhule	Nandurbar	Chinchpada	Kamod	Chinchpada	G.No 73		
		1	50000	0.50	Dhule	Nandurbar	Chinchpada	Kholvihir	Kholvihir	121		
		1	50000	0.50	Dhule	Nandurbar	Nandurbar	Nandhrkhe	Chakale	S. No 420		
		11		**5.50**								
		1	0.25	0.25	Dhule	Mewasi	-	-	-			
		1	0.25	0.25	Dhule	Mewasi	Taloda	Rajvihir	Kothar		N 21 39 56	E 74 13 26
		1	0.25	0.25	Dhule	Mewasi	Wadfali	Wadfali	Wadfali		N 21 74 0195	E 73 85 3204
		1	0.25	0.25	Dhule	Mewasi	Khapar	Gavhali	Gavhali		N 21529308	N 73847723
		1	0.25	0.25	Dhule	Mewasi	Khapar	Khapar	Khapar		N 21535 125	E 739332485
		1	0.25	0.25	Dhule	Mewasi	Akkalkuwa	Aamlibari	Aamlibari			
		6		**1.50**	**0**							
	Total	**17.00**		**7.00**								
vii	Improving mobility of frontline staff for forest protection & patrolling.	LS		2.00	Dhule	Dhule						
		LS		2.00	Dhule	Nandurbar						
		LS		2.00	Dhule	Mewasi						
		LS		2.00	Dhule	Jalgaon						
		LS		2.00	Dhule	Yawal						
	Total			**10.00**								
	Total Forest Protection	8868.00	0.00	573.25								

Works proposed					Location of work						Latlong	
Rule No.	Item of work	Quantity	Rate	Amount (Rs. in Lakhs	Circle	Division	Range	Round	Beat	Compartment No	Latitude	Longitude
1	2	3	4	5	6	7	8	9	10	11	12	13
5(2)(f)	Forest fire prevention and control operations											
i	Cutting and burning of fire lines	8	400.00	20.00	Dhule	Dhule	Dhule	Borvihir	Shirud	312	N20.47438	E74.52277
						Dhule	Dhule	Borvihir	Shirud	313	N20.48246	E74.52227
						Dhule	Dhule	Borvihir	Borvihir	309	N20.625083	E74.804576
						Dhule	Dhule	Borvihir	Borvihir	310	N20.48099	E74.49473
						Dhule	Dhule	Borvihir	Kalkheda	323	N20.815313	E74.905274
						Dhule	Dhule	Borvihir	Kalkheda	324	N20.835915	E74.95621
						Dhule	Dhule	Aarvi	Horpada	341	N20.659272	E74.812855
						Dhule	Dhule	Aarvi	Horpada	343	N20.641821	E74.818977
						Dhule	Dhule	Aarvi	Horpada	344	N20.641821	E74.818977
						Dhule	Dhule	Aarvi	Hendrun	305	N 20.465	E74.4633
						Dhule	Shindkheda	Lamkani	Lamkani	446	N21.05998	E74.57375
						Dhule	Shindkheda	Lamkani	Lamkani	447	N21.07077	E74.56063
						Dhule	Shindkheda	Lamkani	Nimdale	450	N21.02523	E74.672368
						Dhule	Shindkheda	Lamkani	Nimdale	449	N21.02711	E74.676823
						Dhule	Shindkheda	Lamkani	Mehergaon	Gat.No 59	N21.48059	E74.347121
						Dhule	Shindkheda	Lamkani	Mehergaon	Gat. No 263	N20.45715	E74.59789
						Dhule	Shindkheda	Lamkani	Mehergaon	Gat No. 124	N20.45718	E74.58979
						Dhule	Sakri	Vardhana	Ubhand	408	N21.00139	E74.27136
						Dhule	Sakri	Vardhana	Ubhand	410	N21.10155 N21.10152	E074.26102 E07426106
						Dhule	Sakri	Vardhana	Ubhand	411	N21.00146 N21.00147	E074.26137 E074.26134
						Dhule	Sakri	Vardhana	Mahir	398	N21.00121	E74.24133
						Dhule	Sakri	Vardhana	Vardhana	412	N20.54401	E74.4515
						Dhule	Pimpalner	Dighave	Dighave	220	N20.52028 N20.52124	E074.08330 E074.08464

Works proposed					Location of work						Latlong	
Rule No.	Item of work	Quantity	Rate	Amount (Rs. in Lakhs	Circle	Division	Range	Round	Beat	Compartment No	Latitude	Longitude
1	2	3	4	5	6	7	8	9	10	11	12	13
i	Cutting and burning of fire lines					Dhule	Pimpalner	Dighave	Dighave	227	N20.52082 N20.51444	E074.103208 E074.11596
						Dhule	Pimpalner	Dighave	Dighave	228	N20.51509 N20.50443	E074.12068 E074.13501
						Dhule	Kondaibari	Dhaner	Dhaner	176	N21.0677	E74.06096
						Dhule	Kondaibari	Dhaner	Dhaner	177	N21.07136	E74.04031
						Dhule	Kondaibari	Dhaner	Dhaner	178	N21.1156	E74.05636
						Dhule	Kondaibari	Dhaner	Dhaner	179	N21.0748	E74.01965
						Dhule	Kondaibari	Dhaner	Dhaner	180	N21.09467	E74.01574
						Dhule	Kondaibari	Brahmanvel	Pachamauli	164	N21.16905	E74.12384
						Dhule	Kondaibari	Brahmanvel	Pachamauli	165	N21.16135	E74.13132
						Dhule	Kondaibari	Kondaibari	Kondaibari	175	N21.10867	E74.13811
						Dhule	Kondaibari	Dhaner	Choupala	182	N21.06395	E74.00457
						Dhule	Kondaibari	Dhaner	Choupala	184	N21.044835	E73.57031
						Dhule	Kondaibari	Dhaner	Choupala	185	N21.04253	E73.54519
						Dhule	Kondaibari	Dhaner	Choupala	186	N21.03695	E73.57086
						Dhule	Shirpur	Sule	Dahivad	985	N21.36673	E74.96623
						Dhule	Shirpur	Sule	Dahivad	984	N21.37633	E74.94918
						Dhule	Sangvi	Palasner	Bijasani	750	N21.56155	E75.01168
						Dhule	Boradi	Boradi	Boradi	774	N21.51456	E74.92213
						Dhule	Boradi	Boradi	Boradi	717	N21.57178	E74.91936
						Dhule	Boradi	Kodid	Mendhabardi	667	N21.36088	E74.53459
						Dhule	Boradi	Kodid	Dhanwadi	658	N21.36952	E74.50103
		265.2	3035	8.05	Dhule	Nandurbar	9 Range	31 Round	110 Beat			
		210.9	6164	13.01	Dhule	Nandurbar	9 Range	31 Round	110 Beat			
		137.5	9273	12.75	Dhule	Nandurbar	9 Range	31 Round	110 Beat			
		621.60		**53.81**								

Works proposed					Location of work						Latlong	
Rule No.	Item of work	Quantity	Rate	Amount (Rs. in Lakhs	Circle	Division	Range	Round	Beat	Compartment No	Latitude	Longitude
1	2	3	4	5	6	7	8	9	10	11	12	13
ii	**Fire watchers (119 Beat) For 45 Days**	4	400.00	10.00		Dhule	Dhule	Borvihir	Shirud	312	N20.47438	E74.52277
						Dhule	Dhule	Borvihir	Shirud	313	N20.48246	E74.52227
						Dhule	Dhule	Borvihir	Borvihir	309	N20.625083	E74.804576
						Dhule	Dhule	Borvihir	Borvihir	310	N20.48099	E74.49473
						Dhule	Dhule	Borvihir	Kalkheda	323	N20.815313	E74.905274
						Dhule	Dhule	Borvihir	Kalkheda	324	N20.835915	E74.95621
						Dhule	Dhule	Aarvi	Horpada	341	N20.659272	E74.812855
						Dhule	Dhule	Aarvi	Horpada	343	N20.641821	E74.818977
						Dhule	Dhule	Aarvi	Horpada	344	N20.641821	E74.818977
						Dhule	Dhule	Aarvi	Hendrun	305	N20.465	E74.4633
						Dhule	Shindkheda	Lamkani	Lamkani	446	N21.05998	E74.57375
						Dhule	Shindkheda	Lamkani	Lamkani	447	N21.07077	E74.56063
						Dhule	Shindkheda	Lamkani	Nimdale	450	N21.02523	E74.672368
						Dhule	Shindkheda	Lamkani	Nimdale	449	N21.02711	E74.676823
						Dhule	Shindkheda	Lamkani	Mehergaon	Gat.No 59	N21.48059	E74.347121
						Dhule	Shindkheda	Lamkani	Mehergaon	Gat. No 263	N20.45715	E74.59789
						Dhule	Shindkheda	Lamkani	Mehergaon	Gat No. 124	N20.45718	E74.58979
						Dhule	Sakri	Vardhana	Ubhand	408	N21.00139	E74.27136
						Dhule	Sakri	Vardhana	Ubhand	410	N21.10155 N21.10152	E074.26102 E07426106
						Dhule	Sakri	Vardhana	Ubhand	411	N21.00146 N21.00147	E074.26137 E074.26134
						Dhule	Sakri	Vardhana	Mahir	398	N21.00121	E74.24133
						Dhule	Sakri	Vardhana	Vardhana	412	N20.54401	E74.4515
						Dhule	Pimpalner	Dighave	Dighave	220	N20.52028 N20.52124	E074.08330 E074.08464

Works proposed					Location of work						Latlong	
Rule No.	Item of work	Quantity	Rate	Amount (Rs. in Lakhs	Circle	Division	Range	Round	Beat	Compartment No	Latitude	Longitude
1	2	3	4	5	6	7	8	9	10	11	12	13
ii	**Fire watchers (119 Beat) For 45 Days**	4	400.00	10.00		Dhule	Pimpalner	Dighave	Dighave	227	N20.52082 N20.51444	E074.103208 E074.11596
						Dhule	Pimpalner	Dighave	Dighave	228	N20.51509 N20.50443	E074.12068 E074.13501
						Dhule	Kondaibari	Dhaner	Dhaner	176	N21.0677	E74.06096
						Dhule	Kondaibari	Dhaner	Dhaner	177	N21.07136	E74.04031
						Dhule	Kondaibari	Dhaner	Dhaner	178	N21.1156	E74.05636
						Dhule	Kondaibari	Dhaner	Dhaner	179	N21.0748	E74.01965
						Dhule	Kondaibari	Dhaner	Dhaner	180	N21.09467	E74.01574
						Dhule	Kondaibari	Brahmanvel	Pachamauli	164	N21.16905	E74.12384
						Dhule	Kondaibari	Brahmanvel	Pachamauli	165	N21.16135	E74.13132
						Dhule	Kondaibari	Kondaibari	Kondaibari	175	N21.10867	E74.13811
						Dhule	Kondaibari	Dhaner	Choupala	182	N21.06395	E74.00457
						Dhule	Kondaibari	Dhaner	Choupala	184	N21.044835	E73.57031
						Dhule	Kondaibari	Dhaner	Choupala	185	N21.04253	E73.54519
						Dhule	Kondaibari	Dhaner	Choupala	186	N21.03695	E73.57086
						Dhule	Shirpur	Sule	Dahivad	985	N21.36673	E74.96623
						Dhule	Shirpur	Sule	Dahivad	984	N21.37633	E74.94918
						Dhule	Sangvi	Palasner	Bijasani	750	N21.56155	E75.01168
						Dhule	Boradi	Boradi	Boradi	774	N21.51456	E74.92213
						Dhule	Boradi	Boradi	Boradi	717	N21.57178	E74.91936
						Dhule	Boradi	Kodid	Mendhabardi	667	N21.36088	E74.53459
						Dhule	Boradi	Kodid	Dhanwadi	658	N21.36952	E74.50103
		110	52080	57.29	Dhule	Nandurbar	9 Range	31 Round	110 Beat			
		1	3.00	3.00	Dhule	Yawal	Raver	Raver	LOHARA	24, 31	N21 18.349 N21 16.101	--

Works proposed					Location of work						Latlong	
Rule No.	Item of work	Quantity	Rate	Amount (Rs. in Lakhs	Circle	Division	Range	Round	Beat	Compartment No	Latitude	Longitude
1	2	3	4	5	6	7	8	9	10	11	12	13
ii	**Fire watchers (119 Beat) For 45 Days**	1	3.00	3.00	Dhule	Yawal	Raver	Raver	GARBARDI	25, 26,	N21 17.44 N21 17.44	--
		1	3.00	3.00	Dhule	Yawal	Raver	Pal	Pal	55, 59	N21 21.700 N21 21.645	E75 58.358 E 75 54.946
		1	3.00	3.00	Dhule	Yawal	Raver	Pal	Nimdya	56, 57	N21 21.513 N21 22.022	E75 55.57 E75 54.13
		1	3.00	3.00	Dhule	Yawal	Raver	Pal	Garkheda	58, 60	N21 22.520 N21 23.185	E 75 54.047 E75 53.916
		1	3.00	3.00	Dhule	Yawal	Raver	Sashraling	Lalmati	15,16, 17	N21 16.84 N21 18.17	E 75 50.848 E 75 51.033
		1	3.00	3.00	Dhule	Yawal	Raver	Sashraling	Sashraling	14, 18,27	N21 20.496 N21 19.692	E75 50.776 E75 53.999
		8	0.08	0.64	Dhule	Yawal	Raver	Ahirwadi	Padale kh	1, 2,3	N21 21.693 N21 21.134	E 75 54.367 E 75 55.408
		8	0.08	0.64	Dhule	Yawal	Raver	Ahirwadi	Ahirwadi	4, 5,	N21 19.376 N21 13.420	--
		8	0.08	0.64	Dhule	Yawal	Raver	Ahirwadi	Junona	7, 8	N21 21.008 N21 19.054	E76 06.102 E76 05.287
		8	0.08	0.64	Dhule	Yawal	Raver	Ahirwadi	Jinsi	9, 10	N21 22.024 N21 21.488	E 76 00.484 E 76 03.062
		8	0.08	0.64	Dhule	Yawal	Raver	Sahraling	Morhawal	11,12,13 G.N.288	N21 21.539 N21 20.965	E76 02.352 E76 00.752
		8	0.08	0.64	Dhule	Yawal	Raver	Sahraling	Lalmati	15, 16,	N21 16.84 N21 18.17	E 76 00.112 E 75 58.074
		8	0.08	0.64	Dhule	Yawal	Raver	Sahraling	Sahraling	14, 18,	N21 20.496 N21 19.692	E 75 58.179 E 75 57.603
		8	0.08	0.64	Dhule	Yawal	Raver	Sahraling	Lalmati west	19, 21	N21 18.40 N21 17.54	E 76 7.735 E76 0.643
		8	0.08	0.64	Dhule	Yawal	Raver	Raver	Garbardi	25,26, 30	N21 17.44 N21 17.44	E 75 54.367 E 75 55.408
		8	0.08	0.64	Dhule	Yawal	Raver	Raver	Lohara	24, 31	N21 18.349 N21 16.101	E75.58.35 E76.0.26
		8	0.08	0.64	Dhule	Yawal	Raver	Raver	Kusumba	20, 22,	N21.17'16" N21.17.481'	E75 55.8 E75 55.57
		8	0.08	0.64	Dhule	Yawal	Raver	Pal	Pal	55, 59	N21 21.700 N21 21.645	E75 58.358 E 75 54.946
		8	0.08	0.64	Dhule	Yawal	Raver	Pal	Garkheda	58, 60	N21 22.520 N21 23.185	E75.57'37" E75.59.055'
		8	0.08	0.64	Dhule	Yawal	Raver	Pal	Nimdya	56, 57	N21 21.513 N21 22.022	E 75 54.047 E75 53.916
ii	**Total**	**237**	**--**	**107.25**	--	--	--	--	--	--	--	
--	**Total for Forest fire prevention and control operations**	**858.60**		**161.06**	--	--	--	--	--	--	--	
--	**Total for Forest Protection**			**734.31**	--	--	--	--	--	--	--	--

Works proposed					Location of work						Latlong	
Rule No.	Item of work	Quantity	Rate	Amount (Rs. in Lakhs	Circle	Division	Range	Round	Beat	Compartment No	Latitude	Longitude
1	2	3	4	5	6	7	8	9	10	11	12	13
5(2)(g)	Soil and moisture conservation works in the forest	--	--	--	--	--	--	--	--	--	--	--
i	Construction of Gabiyan Bandhara											
		1	0.50	0.50	Dhule	Nandurbar	Toranmal	Khadki	Sindhi	90	N 21 90 85	E 74 48 10
		1	0.50	0.50	Dhule	Nandurbar	Toranmal	Kotbandhani	Kotbandhani	295	N 21 81 21	E 74 47 66
		1	0.50	0.50	Dhule	Nandurbar	Toranmal	Kotbandhani	Kotbandhani	304	N 21 79 36	E 74 42 38
		1	0.50	0.50	Dhule	Nandurbar	Toranmal	Kotbandhani	Modalgaon	257	N 21 83 40	E 74 41 37
		1	0.50	0.50	Dhule	Nandurbar	Toranmal	Ranipur	Ranipur	516	N 21 54 12	E 74 29 40
		1	0.50	0.50	Dhule	Nandurbar	Toranmal	Ranipur	Nagziri East	508	N 21 45 56	E 74 29 55
		1	0.50	0.50	Dhule	Nandurbar	Toranmal	Ranipur	Nagziri West	325	N 21 46 23	E 74 27 57
		1	0.50	0.50	Dhule	Nandurbar	Kakrda	Ghatali	Kamod	329	N 21 44 56	E 74 24 56
		1	0.50	0.50	Dhule	Nandurbar	Kakrda	Ghatali	Kamod	331	N 21 44 18	E 74 25 10
		1	0.50	0.50	Dhule	Nandurbar	Kakrda	Ghatali	Walval	289	N 21 48 20	E 74 23 6
		1	0.50	0.50	Dhule	Nandurbar	Kakrda	Ghatali	Walval	290	N 21 47 35	E 74 23 33
		1	0.50	0.50	Dhule	Nandurbar	Kakrda	Nigadi	Nigadi	280	N 21 47 51	E 74 19 68
		1	0.50	0.50	Dhule	Nandurbar	Kakrda	Nigadi	Nigadi	281	N 21 48 44	E 74 17 48
		1	0.50	0.50	Dhule	Nandurbar	Kakrda	Nigadi	Jugani	274	N 21 82 25	E 74 38 08
		1	0.50	0.50	Dhule	Nandurbar	Kakrda	Nigadi	Jugani	275	N 21 81 76	E 74 36 27
		1	0.50	0.50	Dhule	Nandurbar	Kakrda	Nigadi	Mojara	251	N 21 47 52	E 74 20 29
		1	0.50	0.50	Dhule	Nandurbar	Kakrda	Nigadi	Mojara	277	N 21 47 48	E 74 20 50
		1	0.50	0.50	Dhule	Nandurbar	Kakrda	Mandavi	Mandavi	347	N 21 46 65	E 74 18 30
		1	0.50	0.50	Dhule	Nandurbar	Kakrda	Mandavi	Mandavi	312	N 21 46 49	E 74 19 82
		1	0.50	0.50	Dhule	Nandurbar	Kakrda	Mandavi	Tembhurni	339	N 21 46 32	E 74 15 60
		1	0.50	0.50	Dhule	Nandurbar	Kakrda	Mandavi	Tembhurni	346	N 21 46 50	E 74 17 42
		1	0.50	0.50	Dhule	Nandurbar	Kakrda	Mandavi	Zummat	380	N 21 74 52	E 74 30 08
		1	0.50	0.50	Dhule	Nandurbar	Kakrda	Mandavi	Zummat	351	N 21 45 17	E 74 22 78
		1	0.50	0.50	Dhule	Nandurbar	Kakrda	Kakrda	Khamla	287	N 21 29 54	E 74 12 13

Works proposed					Location of work						Latlong	
Rule No.	Item of work	Quantity	Rate	Amount (Rs. in Lakhs	Circle	Division	Range	Round	Beat	Compartment No	Latitude	Longitude
1	2	3	4	5	6	7	8	9	10	11	12	13
i	**Construction of Gabiyan Bandhara**	1	0.50	0.50	Dhule	Nandurbar	Kakrda	Kakrda	Kakrda	390	N 21 73 49	E 74 35 64
		1	0.50	0.50	Dhule	Nandurbar	Kakrda	Kakrda	Kakrda	389	N 21 73 79	E 74 35 73
		1	0.50	0.50	Dhule	Nandurbar	Kakrda	Kakrda	Kansai	533	N 21 82 44	E 74 28 14
		1	0.50	0.50	Dhule	Nandurbar	Bilgaon	Bhadhal	Udadya	16	N 21 58 53	E 74 22 33
		1	0.50	0.50	Dhule	Nandurbar	Bilgaon	Bhadhal	Bhadhal	2	N 22 00 52	E 74 23 51
		1	0.50	0.50	Dhule	Nandurbar	Bilgaon	Bhadhal	Bhabhri	33	N 21 57 81	E 74 25 8
		1	0.50	0.50	Dhule	Nandurbar	Bilgaon	Bhushya	Savarya	45	N 21 55 50	E 74 21 00
		1	0.50	0.50	Dhule	Nandurbar	Bilgaon	Bhushya	Savarya	37	N 21 56 49	E 74 21 41
		1	0.50	0.50	Dhule	Nandurbar	Bilgaon	Bhushya	Palaszadi	50	N 21 55 12	E 74 23 19
		1	0.50	0.50	Dhule	Nandurbar	Bilgaon	Bilgaon	Bilgaon	109	N 21 52 13	E 74 20 57
		1	0.50	0.50	Dhule	Nandurbar	Bilgaon	Bilgaon	Trishul	230	N 21 51 16	E 74 21 4
		1	0.50	0.50	Dhule	Nandurbar	Bilgaon	Bilgaon	Welkhedi	103	N 21 52 28	E 74 24 19
		1	0.50	0.50	Dhule	Nandurbar	Bilgaon	Mal	Mal	149	N 21 24 31	E 74 17 16
		1	0.50	0.50	Dhule	Nandurbar	Bilgaon	Mal	Mal	150	N 21 54 28	E 74 16 56
		1	0.50	0.50	Dhule	Nandurbar	Bilgaon	Mal	Bori	219	N 21 53 16	E 74 18 7
		1	0.50	0.50	Dhule	Nandurbar	Akrani	Makadkund	Goradi	185	N 21 52 52	E 74 44 90
		1	0.50	0.50	Dhule	Nandurbar	Akrani	Makadkund	Goradi	171	N 21 53 57	E 74 61 13
		1	0.50	0.50	Dhule	Nandurbar	Akrani	Makadkund	Makadkund	127	N 21 54 25	E 74 23 77
		1	0.50	0.50	Dhule	Nandurbar	Akrani	Dhadgaon	Pimpri	202	N 21 53 25	E 74 11 57
		1	0.50	0.50	Dhule	Nandurbar	Akrani	Dhadgaon	Pimpri	212	N 21 51 42	E 74 13 52
		1	0.50	0.50	Dhule	Nandurbar	Akrani	Dhadgaon	Rajbardi	2,37,238	N 21 49 53	E 74 19 33
		1	0.50	0.50	Dhule	Nandurbar	Akrani	Dhadgaon	Dhadgaon	2	N 21 80 25	E 74 20 03
		1	0.50	0.50	Dhule	Nandurbar	Akrani	Asali	Astamba	365	N 21 41 11	E 74 75 15
		1	0.50	0.50	Dhule	Nandurbar	Akrani	Asali	Gourya	334	N 21 46 55	E 74 13 25
		1	0.50	0.50	Dhule	Nandurbar	Akrani	Roshmal	Roshmal	198	N 21 52 14	E 74 93 04
		1	0.50	0.50	Dhule	Nandurbar	Akrani	Roshmal	Aatti	161	N 21 54 11	E 74 51 63
	Total	**50.00**		**25.00**								

Works proposed					Location of work						Latlong	
Rule No.	Item of work	Quantity	Rate	Amount (Rs. in Lakhs	Circle	Division	Range	Round	Beat	Compartment No	Latitude	Longitude
1	2	3	4	5	6	7	8	9	10	11	12	13
iii	**Construction of Cement Bandhare**											
		1	15.00	15.00	Dhule	Nandurbar	Navapur	Khekada	Kareghat	42	N 21 08 30	E 73 38 25
		1	15.00	15.00	Dhule	Nandurbar	Navapur	Khekada	Bhavare	51	N 21 05 65	E 73 44 27
		1	15.00	15.00	Dhule	Nandurbar	Navapur	Wadkalambi	Bari	60	N 21 06 59	E 73 46 86
		1	15.00	15.00	Dhule	Nandurbar	Navapur	Borzar	Sari	55	N 21 03 65	E 73 49 13
		1	15.00	15.00	Dhule	Nandurbar	Navapur	Wadkalambi	Jamtalav	56	N 21 05 97	E 73 48 01
		1	15.00	15.00	Dhule	Nandurbar	Navapur	Borzar	Pratappur	66	N 21 02 30	E 73 51 77
		1	15.00	15.00	Dhule	Nandurbar	Navapur	Borzar	Borzar	64	N 21 01 53	E 73 48 76
		1	15.00	15.00	Dhule	Nandurbar	Nandurbar	Nandarkhe	Ranala	148	N 21 18 19	E 74 23 55
		1	15.00	15.00	Dhule	Nandurbar	Nandurbar	Ashta	Khokrale	437	N 21 18 10	E 74 28 06
		1	15.00	15.00	Dhule	Nandurbar	Nandurbar	Ashta	Khokrale	437	N 21 18 07	E 74 27 45
		10		**150.00**								
		1	15.00	15.00	Dhule	Yawal	Chopda	Lasur	Chougaon	260	N21 19 51.3	E75 13 35.5
		1	15.00	15.00	Dhule	Yawal	Chopda	Satrasen	Andharmali	262	N21 32 67.6	E75 13 59.7
		1	15.00	15.00	Dhule	Yawal	Chopda	Umarti	Umarti	254	N 21 23 03.6	E75 13 63.7
		1	15.00	15.00	Dhule	Yawal	Devziri	Devziri	Devari	170	N21.38361	E75 09 58.9
		1	15.00	15.00	Dhule	Yawal	Devziri	Bormali South	Kundyapani	190	N21.328617	E75.481809
		1	15.00	15.00	Dhule	Yawal	Vaijapur	Vaijapur	Mulyavatar	224 /1	N21'23'165	E75.495336
		1	15.00	15.00	Dhule	Yawal	Vaijapur	Kharyapadav	Mulyavatar East	225/1	N21'23'052	E.075'21'412
		1	15.00	15.00	Dhule	Yawal	Vaijapur	Kharyapadav	gavrypadav south	248/1	N21'36'7277	E075'21'913
		1	15.00	15.00	Dhule	Yawal	Yawal East	Faizapur	Borkheda Bk	34	N21'1610.79"	E075'17'395
		1	15.00	15.00	Dhule	Yawal	Yawal West	Haripura, waghzira,	Haripura East	90	N21'16'33.56"	E75'4545.94"
		10		**150.00**								
--	**Total**	**20.00**		**300.00**								

Works proposed					Location of work						Latlong	
Rule No.	Item of work	Quantity	Rate	Amount (Rs. in Lakhs	Circle	Division	Range	Round	Beat	Compartment No	Latitude	Longitude
1	2	3	4	5	6	7	8	9	10	11	12	13
iv	Creation of Forest ponds/Vantale/Khodtadi											
		1	3	3.00	Dhule	Nandurbar	Shahada	Jaynagar	Abhanpur South	641	N 21 28 29	E 74 41 12
		1	3	3.00	Dhule	Nandurbar	Shahada	Jaynagar	Khaparkheda	621	N 21 48 59	E 74 63 14
		1	3	3.00	Dhule	Nandurbar	Shahada	Dara	Nandya	532	N 21 42 17	E 74 22 87
		1	3	3.00	Dhule	Nandurbar	Shahada	Dara	Dara	526	N 21 43 04	E 74 22 59
		1	3	3.00	Dhule	Nandurbar	Kakrda	Ghatali	Kamod	328	N 21 44 52	E 74 25 47
		1	3	3.00	Dhule	Nandurbar	Kakrda	Ghatali	Walval	289	N 21 48 6	E 74 23 25
		1	3	3.00	Dhule	Nandurbar	Bilgaon	Bhadal	Udadya	9	N 21 59 1	E 74 23 48
		1	3	3.00	Dhule	Nandurbar	Bilgaon	Bhadal	Bhadal	13	N 21 58 19	E 74 25 12
		1	3	3.00	Dhule	Nandurbar	Bilgaon	Bhadal	Bhabari	28	N 21 57 45	E 74 24 46
		1	3	3.00	Dhule	Nandurbar	Bilgaon	Bilgaon	Welkhedi	110	N 21 52 09	E 74 21 50
		1	3	3.00	Dhule	Nandurbar	Bilgaon	Mal	Mal	149	N 21 54 94	E 74 17 11
		1	3	3.00	Dhule	Nandurbar	Bilgaon	Bhushya	Bhushya	40	N 21 54 41	E 74 20 15
		1	3	3.00	Dhule	Nandurbar	Bilgaon	Bhushya	Savarya	44	N 21 55 22	E 74 18 59
		1	3	3.00	Dhule	Nandurbar	Akrani	Makadkund	Akwani	196	N 21 86 37	E 74 12 85
		1	3	3.00	Dhule	Nandurbar	Akrani	Makadkund	Makadkund	129	N 21 54 43	E 74 43 43
		1	3	3.00	Dhule	Nandurbar	Akrani	Dhadgaon	Pimpri	212	N 21 51 45	E 74 14 65
		1	3	3.00	Dhule	Nandurbar	Akrani	Asali	Astamba	366	N 21 40 59	E 74 95 70
		1	3	3.00	Dhule	Nandurbar	Akrani	Asali	Gourya	300	N 21 72 37	E 74 20 34
		1	3	3.00	Dhule	Nandurbar	Akrani	Roshmal	Aatti	162	N 21 54 11	E 74 51 63
		1	3	3.00	Dhule	Nandurbar	Nandurbar	Ashta	Ashta	151	N 21 23 42	E 74 18 23
		20		**60.00**								

Works proposed					Location of work						Latlong	
Rule No.	Item of work	Quantity	Rate	Amount (Rs. in Lakhs	Circle	Division	Range	Round	Beat	Compartment No	Latitude	Longitude
1	2	3	4	5	6	7	8	9	10	11	12	13
v	**Deep CCT/ CCT**											
		20	82000	16.40	Dhule	Nandurbar	Nandurbar EGS	Bhangda	Bhangda	31	N 21 40 73	E 73 98 34
		20	82000	16.40	Dhule	Nandurbar	Nandurbar	Nandarkhe	Ranala	148	N 21 18 19	E 74 23 55
		20	82000	16.40	Dhule	Nandurbar	Nandurbar	Nandarkhe	Chakale	31/06	N 21 20 04	E 74 19 02
--		**60.00**		**49.20**	--	--	--	--	--	--	--	--
vi	**Earthan/Mati Nala Bumds**	--	--	--	--	--	--	--	--	--	--	
		1	3	3.00	Dhule	Nandurbar	Shahada	Dara	Dara	525	N 21 43 12	E 74 25 12
		1	3	3.00	Dhule	Nandurbar	Shahada	Dara	Nandya	532	N 21 42 43	E 74 23 11
		1	3	3.00	Dhule	Nandurbar	Shahada	Shahana	Langadibhavani	572	N 21 57 93	E 74 75 70
		1	3	3.00	Dhule	Nandurbar	Shahada	Shahana	Langadibhavani	573	N 21 58 08	E 74 75 27
		1	3	3.00	Dhule	Nandurbar	Shahada	Mandana	Manmodya west	605	N 21 60 26	E 74 74 20
		1	3	3.00	Dhule	Nandurbar	Shahada	Jaynagar	Khaparkheda	621	N 21 54 18	E 74 66 33
		1	3	3.00	Dhule	Nandurbar	Shahada	Jaynagar	Kondhaval	618	N 21 46 03	E 74 50 69
		1	3	3.00	Dhule	Nandurbar	Akrnai	Makadkund	Mundwad	114	N 21 51 08	E 74 73 75
		1	3	3.00	Dhule	Nandurbar	Akrnai	Dhadgaon	Dhadgaon	2	N 21 15 46	E 74 00 51
		1	3	3.00	Dhule	Nandurbar	Akrnai	Asali	Asali	95	N 21 12 36	E 74 08 94
		1	3	3.00	Dhule	Nandurbar	Chinchpada	Sonkhamb	Visarvadi	101	N 21 14 19.7	E 74 7 559
		1	3	3.00	Dhule	Nandurbar	Chinchpada	Sonkhamb	Sonkhamb	104	N 21 07 95	E 73 41 48
		1	3	3.00	Dhule	Nandurbar	Chinchpada	Kholvihir	Mograni	118	N 21 03 62	E 73 48 96
		1	3	3.00	Dhule	Nandurbar	Navapur	Khekada	Khekada	47	N 21 02 41	E 7351 78
		1	3	3.00	Dhule	Nandurbar	Navapur	Wadkalambi	Bari	55	N 21 03 48	E 73 48 96
		15.00		**45.00**								
--	**Total for SMC works**	**165.00**		**479.20**	--	--	--	--	--	--	--	--

Works proposed					Location of work						Latlong	
Rule No.	Item of work	Quantity	Rate	Amount (Rs. in Lakhs	Circle	Division	Range	Round	Beat	Compartment No	Latitude	Longitude
1	2	3	4	5	6	7	8	9	10	11	12	13
--	**Wildlife Management & Man-animal conflict mitigation**											
5(2)(i)	**Improvement of wildlife habitat as provided in the approved wildlife management plan or working plan**											
i	**All wildlife Management works like Rejuvenation of lakes & rivers, Medow development, Creation & maintenance of water sources/water holes for wildlife, Eradication of invasive species etc. will be carried out as per approved Management plan**											
ii	**SMC Works in Meadow**	1	8.00	8.00	Dhule	Yawal	Yawal East	Dongarkathora/ Faizapur/Moha mandali	Vadri Khu.	81	N21.16'06.24"	--
		1	8.00	8.00	Dhule	Yawal	Yawal East	--	Vadri Khu.	82	N21.16'48.41"	--
		1	8.00	8.00	Dhule	Yawal	Yawal East	--	Charmali	84	N21.19'01.24"	E75.43'33.57"
		1	8.00	8.00	Dhule	Yawal	Yawal East	--	Janori	37	N21.17'49.14"	E75.42'51.15"
		1	8.00	8.00	Dhule	Yawal	Yawal East	--	Andharmali	47	N21.18'46.20"	E75.45'51.66"
		1	8.00	8.00	Dhule	Yawal	Yawal East	--	Ruikheda	85	N21.19'21.57"	E75.52'47.79"
		1	9.00	9.00	Dhule	Yawal	Yawal West	Haripura, waghzira,Jamn	Haripura	91	N21.16'16.34"	E75.50'11.76"
		1	9.00	9.00	Dhule	Yawal	Yawal West	--	Haripura East	90	N21.16'27.94"	E75.45'54.32"
		1	9.00	9.00	Dhule	Yawal	Yawal West	--	Nimbadevi	144	N21.16'54.35"	E75.40'45.55"
		1	9.00	9.00	Dhule	Yawal	Yawal West	--	Waghzira	147	N21.16'16.89"	E75.42'20.99"
		1	9.00	9.00	Dhule	Yawal	Yawal West	--	Ambapani	99	N21.19'55.31"	E75.36'06.44"
		1	9.00	9.00	Dhule	Yawal	Yawal West	--	Ambapani West	104	N21.19'29.55"	E75.36'01.04"
--	**Total**	**12.00**	**--**	**102.00**	--	--	--	--	--	--	--	
i	**Establishment, operation and maintenance of animal rescue centre/ Transit treatment Centre**	0.00	--	0.00	--	--	--	--	--	--	--	--
ii	**Veterinary treatment facilities for wild animals**	1	1.00	1.00	Dhule	Nandurbar	Shahada	Dara	Dara			
		1	1.00	1.00	Dhule	Nandurbar	Toranmal	Ranipur	Ranipur			
		1	1.00	1.00	Dhule	Nandurbar	Nandurbar	Ashata	Ranala			
		3		**3.00**								

Works proposed					Location of work						Latlong	
Rule No.	Item of work	Quantity	Rate	Amount (Rs. in Lakhs	Circle	Division	Range	Round	Beat	Compartment No	Latitude	Longitude
1	2	3	4	5	6	7	8	9	10	11	12	13
iii	Animal seizing & capturing devices	8	0.00	8.00	Dhule	Dhule						
		1	3.00	3.00	Dhule	Nandurbar	Nandurbar	Ashata	Ranala			
		1	3.00	3.00	Dhule	Nandurbar	Shahada	Dara	Dara			
		1	3.00	3.00	Dhule	Nandurbar	Toranmal	Ranipur	Ranipur			
		1	3.00	3.00	Dhule	Nandurbar	Navapur	Wadkalambi	Karanji			
	Total	**12**		**20.00**								
iv	Rescue emergency operations	1.00		5.00	Dhule	Dhule						
		1	1.00	1.00	Dhule	Nandurbar	Nandurbar	Ashata	Ranala			
		1	1.00	1.00	Dhule	Nandurbar	Shahada	Dara	Dara			
		1	1.00	1.00	Dhule	Nandurbar	Toranmal	Ranipur	Ranipur			
		1	1.00	1.00	Dhule	Nandurbar	Navapur	Wadkalambi	Karanji			
	Total	**5.00**		**9.00**								
	Total	**20.00**	**--**	**32.00**	**--**	**--**	**--**	**--**	**--**	**--**	**--**	**--**
--	**Total for Wildlife Management & Man-animal conflict mitigation**			**134.00**	--	--	--	--	--	--	--	--
--	**Grand Total for Activities under not less than 80% component**			**1868.87**		--	--	--	--	--	--	--
5 (3)	**Works under not more than 20 % component (Rule 5 (3))**											
5(3)(a)	**Establishment, up-gradation and maintenance of modern nurseries and other planting stock production facilities for production of quality planting materials**	1		10	Dhule	Nandurbar	Navapur	Wadkalambi	Karanji	G.No 286,287		
		1		10	Dhule	Nandurbar	Nandurbar	Nandarkheda	Thanepada 1	139		
		1		10	Dhule	Nandurbar	Shahada	Mandana	Dudhkheda	587		
		1		10	Dhule	Nandurbar	Chinchpada	Chinchpada	Chinchpada			
		1		10	Dhule	Nandurbar	Kakarda	Mandavi	Mandavi	347		
				50.00								
5(3)(d)	**Construction, up-gradation and maintenance of inspection paths, forest roads in forest area, fire lines, watch towers, check posts and timber depots**											
	Construction of watch Tower	1	10.000	10.000	Dhule	Mewsasi	Taloda	Ranipur	Kardi	477	N 21 44 22 62	E 74 15 234
	Total			**10.00**								

Works proposed					Location of work						Latlong	
Rule No.	Item of work	Quantity	Rate	Amount (Rs. in Lakhs	Circle	Division	Range	Round	Beat	Compartment No	Latitude	Longitude
1	2	3	4	5	6	7	8	9	10	11	12	13
5(3)(e)	**Construction of residential and official buildings in forests for front line staffs deployed for protection of forest and wildlife**											
i	**Construction of Type I Quarters**	1	22.00	22.00	Dhule	Dhule	Shirpur	Sule	Sule	966	21.24267	74.58878
		1	22.00	22.00	Dhule	Dhule	Sangvi	Sangvi	Sangvi	Vanrakshak Qtr.	21.474545	74.997392
		2	22.00	44.00	Dhule	Jalgaon	Chalisgaon	Chalisgaon	Chalisgaon	Surve No.40/1	N20.66 64	E75 33 60
		1	22.00	22.00	Dhule	Yawal	Chopda	Umarti	Umarti	254	N 21 23 03.6	E75 13 35.5
		1	22.00	22.00	Dhule	Yawal	Devziri	Devziri	Devziri	171	N21.22.632	E75 13 06.4
--	**Total**	**6.00**	**--**	**132.00**	--	--	--	--	--	--	--	E075'29'8032
ii	**Construction of Type II Quarters**											
		1	26.00	26.00	Dhule	Dhule	Sakri	vardhana	vardhana		N21.02408	E74.24158
		1	26	26.00	Dhule	Nandurbar	Akrani	Dhadgaon	Dhadgaon	S. No. 205	N 21 49 26	E 74 12 53
		1	26.000	26.00	Dhule	Mewasi	Molgi	-	-	96		
--		1	26.00	26.00	Dhule	Yawal	Chopda	Lasur	Lasur	286	N21 11 32.1	E075'29'8032
--	**Total**	**4.00**	**--**	**104.00**	--	--	--	--	--	--		
iii	**Construction of Type III Quarters**											
		1	36	36.00	Dhule	Nandurbar	Akrani	Dhadgaon	Dhadgaon	S. No. 205	N 21 49 26	E 74 12 53
		1	36	36.00	Dhule	Jalgaon	Pachora	Pachora	Pachora	Surve No. 87/B	N 20 39 59.36	E 75 33 01.60
		1	36	36.00	Dhule	Yawal	Chopda	Chopda	Mamlda	259	N21 23 01 .0	E075'15'48
		3		**108.00**	--	--	--	--	--	--		
iv	**Construction of Range office**											
		1	45.00	45.00	Dhule	Dhule	Dhule	Dhule	-		N20.53816	E74.46565
		1	45.00	45.00	Dhule	Nandurbar	Akrani	Dhadgaon	Dhadgaon	S. No. 205	N 21 49 29	E 74 12 52
		1	45.00	45.00	Dhule	Mewasi	Wadfali	Wadfali			N 21 74 01 95	E 73 85 32 04
		1	45.00	45.00	Dhule	Jalgaon	Pachora	Pachora	Pachora	Surve No. 87/B	N20.6664	E75.3360
		1	45.00	45.00	Dhule	Yawal	Adawad	Adawad	Adawad	831	N21.13.116	E75 09 33.01
--	**Total**	**5**	**--**	**225.00**	--	--	--	--	--	--	--	

Works proposed					Location of work						Latlong	
Rule No.	Item of work	Quantity	Rate	Amount (Rs. in Lakhs	Circle	Division	Range	Round	Beat	Compartment No	Latitude	Longitude
1	2	3	4	5	6	7	8	9	10	11	12	13
v	**Amenities for Woman Front line staff**											
		1	14	14.00	Dhule	Nandurbar	Shahada	Shahada	Shahada	S. No. 129/ 130/135/3	N 21 31 35	E 74 28 33
		1	14.00	14.00	Dhule	Jalgaon	Parola	Chorwad	Chorwad	375	N 20 48 16.55	E75 85 04.87
	Total	**2**		**28.00**								
--	**Total New Constructions**	**20.00**	**--**	**597.00**	--	--	--	--	--	--	--	--
5(3)(i)	**Publicity-cum-awareness programme and exhibition on the various schemes being implemented by the State Authority from State Fund (including Nature Awareness Program conduct by METDB)**	--	--	--	--	--	--	--	--	--	--	--
		LS		2.00	Dhule	Dhule						
		LS		2.00	Dhule	Nandurbar						
		LS		2.00	Dhule	Mewasi						
		LS		2.00	Dhule	Jalgaon						
		LS		2.00	Dhule	Yawal						
				10.00								
--	**Total for works under not more than 20% component**			**667.00**	--	--	--	--	--	--	--	--
--	**Grand Total for NPV**	**0.00**	**--**	**2535.87**	--	--	--	--	--	--	--	--

ANNUAL PLAN OF OPERATIONS 2022-23

FORMAT VII A---- Forestry and other activities proposed under Net Present Value amount (Please see Rule no. 5(2), 5(3), and proviso under Rule 5(3) (NPV - 04)

Gadchiroli Territorial Circle

Works proposed					Location of work						Latlong	
Rule No.	Item of work	Quantity	Rate	Amount (Rs. in Lakhs	Circle	Division	Range	Round	Beat	Compartment No	Lattitude	Longitude
1	2	3	4	5	6	7	8	9	10	11	12	13
5 (2)	**Works under Not less than 80 % component (Rule 5 (2))**											
5(2)(a)	**Assisted Natural Regeneration (PPO Works)**											
i	New works (PPO) AR Mix Plantation --2022 --23 (PPO)	20.000	1.69	33.80	Gadchiroli	Allapalli	Ghot	Vikaspalli	Vikaspalli	429	N 19◦791'713"	E 80◦141'379"
		20.000	1.69	33.80	Gadchiroli	Allapalli	Ghot	Vikaspalli	Madeamgaon -	412	N 19◦48'50"	E 80◦07'56"
		25.000	1.69	42.25	Gadchiroli	Allapalli	Ghot	Regadi	Regadi	467	N 19◦44'41"	E 80◦07'24"
		20.000	1.69	33.80	Gadchiroli	Allapalli	Ghot	Regadi	Wangnur	432	N 19◦46'14"	E 80◦10'18"
		20.000	1.69	33.80	Gadchiroli	Allapalli	Ghot	Regadi	Adangepalli	447	N 19◦75'702"	E 80◦149'139"
		105.000		**177.45**								
		30.00	1.69	50.70	Gadchiroli	Wadsa	Porla	Shirshi	Shirshi	48	N 20 24 3	E 80 3 13
		30.00	1.69	50.70	Gadchiroli	Wadsa	Porla	Maregaon	Maushikhamb	20	N 20 18 52	E 80 09 9
		20.00	1.69	33.80	Gadchiroli	Wadsa	Wadsa	Shankarpur	Rawanwadi	101	N 20 40 822	E 80 05 063
		50.00	1.69	84.50	Gadchiroli	Wadsa	Wadsa	Shankarpur	Boldha	102	N20 42 56.1	E 80 04 077
		20.00	1.69	33.80	Gadchiroli	Wadsa	Kurkheda	Gothangaon	Khairi	961	N 20.30.33	E 80.09.55
		20.00	1.69	33.80	Gadchiroli	Wadsa	Kurkheda	Gothangaon	Ghati	1136	N 20.32.38	E 80.10.12
		30.00	1.69	50.70	Gadchiroli	Wadsa	Armori	Armori	Ramala	41	N20 27 46	E 80 01 01
		25.00	1.69	42.25	Gadchiroli	Wadsa	Armori	Vairagad	Pisewadadha	670	N20 24 10	E 80 12 24
		225.00		**380.25**								
		20.00	1.69	33.80	Gadchrioli	Gadchrioli	N. Dhanora	Rangi	N.Rangi	605	N 20 21' 58"	E 80 12'18624"
		20.00	1.69	33.80	Gadchiroli	Gadchrioli	N. Dhanora	Rangi	N.Rangi	441	N 20 21' 49"	E 80 11'0"
		20.00	1.69	33.80	Gadchiroli	Gadchrioli	N. Dhanora	Rangi	N.Rangi	444	N 20 21' 10"	E 80 12' 29"
		20.00	1.69	33.80	Gadchiroli	Gadchiroli	Kunghada	Jogna	Murmuri	36	N 19 57' 567"	E 80 02'186"
		25.00	1.69	42.25	Gadchiroli	Gadchiroli	Kunghada	Jogna	Yedanur	8	N 19 56' 749"	E 80 03'310"
		15.00	1.69	25.35	Gadchiroli	Gadchiroli	Kunghada	Jogna	Yedanur	9	N 19 55' 847"	E 80 02'341"
		20.00	1.69	33.80	Gadchiroli	Gadchiroli	Kunghada	Jogna	Kurud	2	N 19 56' 576"	E 79 56'130"
		140.00		**236.60**								
		20.00	1.69	33.80	Gadchiroli	Bhamragad	Etapalli	Geda	Geda	352	N 19 70 20	E 80 19 42
		20.00	1.69	33.80	Gadchiroli	Bhamragad	Etapalli	Geda	Ekansur	264	N 19 41 49	E 80 14 21
		20.00	1.69	33.80	Gadchiroli	Bhamragad	Etapalli	Geda	Geda	353	N 19 70 26	E 80 19 51
		10.00	1.69	16.90	Gadchiroli	Bhamragad	Etapalli	Geda	Ekansur	264	N 19 41 49	E 80 14 21
		70.00		**118.30**								
	Total	**540.00**		**912.60**								

Works proposed					Location of work						Latlong	
Rule No.	**Item of work**	**Quantity**	**Rate**	**Amount (Rs. in Lakhs**	**Circle**	**Division**	**Range**	**Round**	**Beat**	**Compartment No**	**Lattitude**	**Longitude**
5(2)(a)	**Assisted Natural Regeneration (FYO Works)**	25.00	0.94	23.50	Gadchiroli	wadsa	Purada	Purada	Purada	222	N 20 38 52	E 80 22 60
		20.00	0.94	18.80	Gadchiroli	wadsa	Purada	Purada	Dongargaon	240	N 20 37 35.73	E 80 22 23.17
		20.00	0.94	18.80	Gadchiroli	wadsa	Purada	Ramgad	Chipari	250	N 20 33 41	E 80 21 02
		10.00	0.94	9.40	Gadchiroli	wadsa	Purada	Ramgad	Chipari	251	N 20 33 44	E 80 21 06
		10.00	0.94	9.40	Gadchiroli	wadsa	Purada	Ramgad	Kurandi	248	N 20 34 7.0	E 80 21 29.95
		20.00	0.94	18.80	Gadchiroli	wadsa	Bedgaon	Korchi	Dawandi	1344	N 20º40'39"	E 80º30'13"
		40.00	0.94	37.60	Gadchiroli	wadsa	Kurkheda	Palasgad	Charbhatti	173	N 20 41.120	E 80 17.268
		40.00	0.94	37.60	Gadchiroli	wadsa	Kurkheda	Kurkheda	Kurkheda	166	N 20 39.021	E 80 14.158
		20.00	0.94	18.80	Gadchiroli	wadsa	Kurkheda	Kurkheda	Kurkheda	166	N 20 39.185	E80 13.598
		25.00	0.94	23.50	Gadchiroli	wadsa	Kurkheda	Kurkheda	Kurkheda	161	N 20 36.441	E 80 14.02
		25.00	0.94	23.50	Gadchiroli	wadsa	Kurkheda	Kurkheda	Kurkheda	161	N 20 36.515	E 80 14.452
		30.00	0.94	28.20	Gadchiroli	wadsa	wadsa	Vihirgaon	Vihirgaon	82	N 20°34'32"	E 80°03'40"
		20.00	0.94	18.80	Gadchiroli	wadsa	wadsa	Shirpur	Shirpur	78	N 20°32'92"	E 80°07'85"
		25.00	0.94	23.50	Gadchiroli	wadsa	wadsa	Shirpur	Arattondi	124	N 20°34'34"	E 80°07'34"
	Total	**330.00**		**310.20**								
	Total	**870.00**		**1222.80**								
5(2)(b)	**Artificial Regeneration**											
iii	Artificial Regeneration 4th YO	17.600	0.18	3.17	Gadchiroli	Allapalli	Allapalli	Allapalli	Nender	12/I	N 19◦23'239"	E 80◦06'819"
		30.000	0.18	5.40	Gadchiroli	Allapalli	Allapalli	Allapalli	Zamela	50/I	N 19◦19'361"	E 80◦05'112"
		18.145	0.18	3.27	Gadchiroli	Allapalli	Allapalli	Allapalli	Talwada -I	66/I	N 19◦24'254"	E 80◦07'437"
		30.225	0.18	5.44	Gadchiroli	Allapalli	Allapalli	Allapalli	Talwada -II	62/I	N 19◦22'891"	E 80◦07'725"
		43.383	0.18	7.81	Gadchiroli	Allapalli	Allapalli	Allapalli	Mirkal	77/I	N 19◦23'339"	E 80◦10'743"
		14.100	0.18	2.54	Gadchiroli	Allapalli	Allapalli	Allapalli	Karampani	58/I	N 19◦20'673"	E 80◦07'055"
		25.000	0.18	4.50	Gadchiroli	Allapalli	Chamorshi	Bhadbhidi	Bhadbhidi	376	N 19◦53'239"	E 79◦59'081"
		178.453		**32.12**								
		20.00	0.18	3.60	Gadchiroli	Wadsa	Porla	Porla	Sakhara	568	N20.14.21.25	E79.59.50.28
		20.00	0.18	3.60	Gadchiroli	Wadsa	Porla	Maregaon	Moushikhamb	20	N20.18.40.02	E80.8.12.96
		30.00	0.18	5.40	Gadchiroli	Wadsa	Porla	Churchura	Churchura	566-1	N20.14.7.53	E80.1.8.34
		10.00	0.18	1.80	Gadchiroli	Wadsa	Porla	Churchura	Churchura	566 -2	N20.14.5.08	E80.0.49.87
		20.00	0.18	3.60	Gadchiroli	Wadsa	Porla	Churchura	Mahadwadi	566 -3	N20.14.20.50	E80.1.25.48
		10.00	0.18	1.80	Gadchiroli	Wadsa	Wadsa	Shankarpur	Ravanwadi	892	N20.19.12.10	E80.07.36.19
		30.00	0.18	5.40	Gadchiroli	Wadsa	Armori	Armori	Armori	41	N 20 28 21.90	E80 03 26.50
		30.00	0.18	5.40	Gadchiroli	Wadsa	Armori	Armori	Armori	67	N 20 29 59.20	E 79 58 72.08
		170.00		**30.60**								

Works proposed					Location of work						Latlong	
Rule No.	**Item of work**	**Quantity**	**Rate**	**Amount (Rs. in Lakhs**	**Circle**	**Division**	**Range**	**Round**	**Beat**	**Compartment No**	**Lattitude**	**Longitude**
iii	Artificial Regeneration 4th YO	15.00	0.18	2.70	Gadchiroli	Sironcha	Sironcha	Karaspalli	Rangayyapalli	10B	N 18 52 50	E 80 00 10
		20.00	0.18	3.60	Gadchiroli	Sironcha	Sironcha	Karaspalli	Karaspalli	12B	N 18 51 49	E 80 00 51
		15.00	0.18	2.70	Gadchiroli	Sironcha	Sironcha	Wardham	Wardham	262	N 18 44 07	E 80 05 24
		25.00	0.18	4.50	Gadchiroli	Sironcha	Asaralli	Asaralli	Laxmideopetha	7 PF	N 18 45 38	E 80 06 44
		25.00	0.18	4.50	Gadchiroli	Sironcha	Asaralli	Asaralli	Asaralli	302	N 18 44 29	E 80 11 28
		20.00	0.18	3.60	Gadchiroli	Sironcha	Bamni	Tekda	Kambalpetha	37	N 19 00 01	E 80 00 23
		30.00	0.18	5.40	Gadchiroli	Sironcha	Kamlapur	Rajaram	Rajaram 2	142	N 19 15 34	E 80 08 57
		150.00		**27.00**								
		20.00	0.18	3.60	Gadchiroli	Gadchiroli	Gadchiroli	Gurwala	W.Gurwala	150	N 20 6' 16"	E 80 4' 3"
		15.00	0.18	2.70	Gadchiroli	Gadchiroli	Gadchiroli	Maroda	Kosamghat	134	N 20,070551	E 80,116018
		20.00	0.18	3.60	Gadchiroli	Gadchiroli	Kunghada	Jogna	Murmuri	4	N 19,962714	E 79,981492
		20.00	0.18	3.60	Gadchiroli	Gadchiroli	Potegaon	Potegaon	Potegaon	50	N 19 58' 3"	E 80 7'52"
		20.00	0.18	3.60	Gadchiroli	Gadchiroli	N.Dhanora	Muska	Toyagondhi	581	N 20 22' 25"	E 80 21'1"
		20.00	0.18	3.60	Gadchiroli	Gadchiroli	N.Dhanora	Rangi	S.Rangi	432	N 20 18' 21"	E 80 12'12"
		20.00	0.18	3.60	Gadchiroli	Gadchiroli	N.Dhanora	Rangi	Narchuli	438	N 20 21' 2"	E 80 8'59"
		25.00	0.18	4.50	Gadchiroli	Gadchiroli	Chatgaon	Ambhirza	Michgaon	426	N 20,285588	E 80 19 22 77
		25.00	0.18	4.50	Gadchiroli	Gadchiroli	Chatgaon	Chatgaon	Chatgaon	409	N 20 13' 8"	E 80 8'58"
		25.00	0.18	4.50	Gadchiroli	Gadchiroli	W.Murumgaon	Aampayali	Aampayali	530	N 20 20' 17"	E 80 25'42"
		25.00	0.18	4.50	Gadchiroli	Gadchiroli	W.Murumgaon	Murumgaon	Khedegaon	636	N 20 20' 20"	E 80 25'43"
		235.00		**42.30**								
	Total for Artificial Regeneration	**733.45**		**132.02**								
5(2)(c)	**Silvicultural operations in forests**											
(i)	Fodder development - (PPO)	1.00	2.28	2.28	Gadchiroli	Allapalli	Aheri	Lagam	Bori	592	N 19◦321'701"	E 79◦564'409"
		10.00	2.28	22.80	Gadchiroli	Allapalli	Ghot	Vikaspalli	Vikaspalli	428	N 19◦792'635"	E 80◦15'498"
		10.00	2.28	22.80	Gadchiroli	Allapalli	Chamorshi	Jamgiri	Narayanpur -I	534	N 19◦47'37"	E 79◦55'32"
		1.00	2.28	2.28	Gadchiroli	Allapalli	Pirmilli	Medpalli	Kasampalli	103	N 19◦428'896"	E 80◦184'593"
	Total	**22.00**		**50.16**								

Works proposed					Location of work						Latlong	
Rule No.	**Item of work**	**Quantity**	**Rate**	**Amount (Rs. in Lakhs**	**Circle**	**Division**	**Range**	**Round**	**Beat**	**Compartment No**	**Lattitude**	**Longitude**
(ii)	**Fodder development -- (FYO)**	10.00	1.08	10.80	Gadchiroli	Gadchiroli	Kunghada	Kunghada	Ganpur	139	$N20^0$ 02 18	$E80^0$ 02 44
		10.00	1.08	10.80	Gadchiroli	Gadchiroli	Kunghada	Kunghada	Navegaon	140	$N20^0$ 03 18	$E80^0$ 01 09
		10.00	1.08	10.80	Gadchiroli	Gadchiroli	Kunghada	Kunghada	Navegaon	144	$N20^0$ 03 51	$E80^0$ 02 40
		10.00	1.08	10.80	Gadchiroli	Gadchiroli	Kunghada	Jogna	Yedanur	34	$N19^0$ 56 49	$E80^0$ 03 18
		40.00		**43.20**								
		10.00	1.08	10.80	Gadchiroli	Wadsa	Armori	Armori	Ravi	55	N 20 30 42.08	E 79 58 28.80
		5.00	1.08	5.40	Gadchiroli	Wadsa	Armori	Armori	Injewari	49	N 20 22 51.04	E 80 02 16.72
		5.00	1.08	5.40	Gadchiroli	Wadsa	Wadsa	Wadsa	Kondhala	58	N -- 20°32'18"	E 79°59'37"
		5.00	1.08	5.40	Gadchiroli	Wadsa	Wadsa	Wadsa	Usegaon	91	N 20°33'22"	E 79°59'38"
		25.00		**27.00**								
	Total	**65.00**	**0.00**	**70.20**								
(iii)	**Fodder development -- (SYO)**	1.00	0.73	0.73	Gadchiroli	Allapalli	Aheri	Lagam	Bori	592	N 19◦53'53"	E 79◦94'84"
		2.00	0.73	1.46	Gadchiroli	Allapalli	Aheri	Lagam	Singanpeth	597	N 19◦32'74"	E 79◦57'71"
		10.00	0.73	7.30	Gadchiroli	Allapalli	Ghot	Deoda	Deoda -I	480	N 19◦745'964"	E 80◦090'864"
		5.00	0.73	3.65	Gadchiroli	Allapalli	Ghot	Deoda	Pusguda -2	559	N 19◦46'63"	E 80◦06'635"
		10.00	0.73	7.30	Gadchiroli	Allapalli	Chamorshi	Bhadbhidi	Bhadbhidi	583	N 19◦54'23"	E 80◦01'38"
		10.00	0.73	7.30	Gadchiroli	Allapalli	Chamorshi	Jamgiri	Narayanpur -I	543	N 19◦48'59"	E 79◦57'58"
		2.00	0.73	1.46	Gadchiroli	Allapalli	Pirmilli	Medpalli	Kasampalli	103	N 19◦25'35"	E 80◦11'11"
		40.00		**29.20**								
		5.00	0.73	3.65	Gadchiroli	Sironcha	Kamlapur	Asha	Chitveli - 1	52	N 19 07 14	E 80 19 20
		5.00	0.73	3.65	Gadchiroli	Sironcha	Kamlapur	Asha	Chitveli - 2	54	N 19 08 31	E 80 19 28
		5.00	0.73	3.65	Gadchiroli	Sironcha	Kamlapur	Asha	Chitveli - 2	77	N 19 10 02	E 80 19 29
		5.00	0.73	3.65	Gadchiroli	Sironcha	Kamlapur	Asha	Chitveli - 2	78	N 19 09 25	E 80 19 51
		5.00	0.73	3.65	Gadchiroli	Sironcha	Kamlapur	Asha	Chitveli - 2	79	N 19 09 58	E 80 20 09
		5.00	0.73	3.65	Gadchiroli	Sironcha	Kamlapur	Asha	Asha II	97	N 19 13 57	E 80 58 53
		5.00	0.73	3.65	Gadchiroli	Sironcha	Kamlapur	Kamlapur	Kolamarka -II	68	N 19 09 21	E 80 18 46

Works proposed					Location of work						Latlong	
Rule No.	**Item of work**	**Quantity**	**Rate**	**Amount (Rs. in Lakhs**	**Circle**	**Division**	**Range**	**Round**	**Beat**	**Compartment No**	**Lattitude**	**Longitude**
(iii)	**Fodder development -- (SYO)**	5.00	0.73	3.65	Gadchiroli	Sironcha	Kamlapur	Kamlapur	Kolamarka -II	69	N 19 10 38	E 80 14 44
		5.00	0.73	3.65	Gadchiroli	Sironcha	Pranhita	Devalmari	Kolpalli	232	N 19 17 17	E 80 02 23
		5.00	0.73	3.65	Gadchiroli	Sironcha	Pranhita	Gudigudam	Nandigaon -2	233	N 19 17 15	E 80 02 19
		5.00	0.73	3.65	Gadchiroli	Sironcha	Pranhita	Devalmari	Kolpalli	234	N 19 18 01	E 80 02 24
		5.00	0.73	3.65	Gadchiroli	Sironcha	Pranhita	Devalmari	Kolpalli	235	N 19 18 05	E 80 02 28
		2.00	0.73	1.46	Gadchiroli	Sironcha	Pranhita	Devalmari	Kolpalli	237	N 19 18 05	E 80 01 58
		5.00	0.73	3.65	Gadchiroli	Sironcha	Pranhita	Gudigudam	Gudigudam 1	181	N 19 15 44	E 80 05 18
		5.00	0.73	3.65	Gadchiroli	Sironcha	Pranhita	Gudigudam	Gudigudam 1	183	N 19 14 49	E 80 06 05
		5.00	0.73	3.65	Gadchiroli	Sironcha	Pranhita	Gudigudam	Gudigudam 1	185	N 19 14 14	E 80 06 10
		5.00	0.73	3.65	Gadchiroli	Sironcha	Pranhita	Devalmari	Devalmari 2	261	N 19 16 54	E 79 58 52
		5.00	0.73	3.65	Gadchiroli	Sironcha	Pranhita	Venkatapur N	Watra khurd 1	272	N 19 13 23	E 79 58 39
		2.00	0.73	1.46	Gadchiroli	Sironcha	Pranhita	Venkatapur N	Watra khurd 1	273	N 19 13 36	E 79 57 53
		2.00	0.73	1.46	Gadchiroli	Sironcha	Pranhita	Venkatapur S	Lankachen 2	292	N 19 08 10	E 79 57 54
		5.00	0.73	3.65	Gadchiroli	Sironcha	Pranhita	Gudigudam	Gudigudam 1	187	N 19 13 16	E 80 07 26
		10.00	0.73	7.30	Gadchiroli	Sironcha	Bamni	Parsewada	Mudewahi	17	N 19 04 48	E 79 58 15
		10.00	0.73	7.30	Gadchiroli	Sironcha	Bamni	Bejurpalli	Bejurpalli 3	26	N 19 04 15	E 79 58 39
		116.00		**84.68**								
	Total	**156.00**		**113.88**								
	Total Silvicultural operations	**243.00**	**0.00**	**234.24**								
	Forest Protection											
5(2)(d)	**Protection of plantations and forests**											
i	Encroachment removal & Forest Protection	8000 Rmt	0.01	40.00	Gadchiroli	Wadsa	Porla	Churchura	Churchura	54	N 20 15 37	E 80 02 15
		5000 Rmt	0.01	25.00	Gadchiroli	Wadsa	Porla	Porla	Sakhara	67	N 20 16 51	E 80 0 59
		4000 Rmt	0.01	20.00	Gadchiroli	Wadsa	Wadsa	Shankarpur	Chop	104	N 20°40'42"	E 80°05'28'
		3600 Rmt	0.01	18.00	Gadchiroli	Wadsa	Wadsa	Wadsa	Shivrajpur	853	N 20°39'37"	E 80°00'27'
		3400 Rmt	0.01	17.00	Gadchiroli	Wadsa	Wadsa	Wadsa	Wadsa	866	N 20°59'06"	E 79°97'71'
		3600 Rmt	0.01	18.00	Gadchiroli	Wadsa	Wadsa	Vihirgaon	Vihirgaon	82	N 20°34'00"	E 80°05'02'
		3000 Rmt	0.01	15.00	Gadchiroli	Wadsa	Wadsa	Vihirgaon	Vihirgaon	111/2	N 20°36'28"	E 80°03'24'
		30600Rmt		**153.00**								

Works proposed					Location of work						Latlong	
Rule No.	**Item of work**	**Quantity**	**Rate**	**Amount (Rs. in Lakhs**	**Circle**	**Division**	**Range**	**Round**	**Beat**	**Compartment No**	**Lattitude**	**Longitude**
i	Encroachment removal & Forest Protection	20.00	0.20	4.00	Gadchiroli	Sironcha	Kamlapur	Kamlapur	Kamlapur	147	N 19 13 10	E 80 11 40
		10.00	0.20	2.00	Gadchiroli	Sironcha	Sironcha	Sironcha	Sironcha	63	N 18 50 54.8	E 79 57 59.3
		20.00	0.20	4.00	Gadchiroli	Sironcha	Pranhita	Gudigudam	Gudigudam	183	N 18 44 50	E 80 07 18
		20.00	0.20	4.00	Gadchiroli	Sironcha	Asaralli	Asaralli	Asaralli	302	N 18 44 29	E 80 11 28
		70.00		**14.00**								
	Total			**167.00**								
ii	Survey, Demarcation & Fencing of Sensitive forest areas	250 Rmt	5.00	5.00	Gadchiroli	Wadsa	Armori	Armori	Injewari	786 to 49	N20 59 28	E 80 02 19
		125 Rmt	2.50	2.50	Gadchiroli	Wadsa	Armori	Palasgaon	Palasgaon	818	N20 30 38	E 80 04 00
		325 Rmt	7.00	7.00	Gadchiroli	Wadsa	Armori	Palasgaon	Palasgaon	774	N20 30 58	E 80 04 32
		62.50 Rmt	1.25	1.25	Gadchiroli	Wadsa	Armori	Vairagad	Pisewadadha	670	N20 24 86	E 80 12 15
				15.75								
		205 Rmt	0.04	9.00	Gadchiroli	Gadchiroli	Gadchiroli	Maroda	Maroda	137	N 20°06'55"	E 80°08'85"
	Total			**24.75**								
	Boundry Pillar Class I	385	0.08	30.80	Gadchiroli	Wadsa	Porla	Porla	Sakhara	570	N 20 15 32	E 79 59 41
		525	0.08	42.00	Gadchiroli	Wadsa	Porla	Porla	Sakhara	569	N 20 15 06	E 79 59 42
		595	0.08	47.60	Gadchiroli	Wadsa	Porla	Churchura	Churchura	575	N 20 15 02	E 80 0 01
		140	0.08	11.20	Gadchiroli	Wadsa	Porla	Porla	Kitadi	794	N 20 21 23	E 79 59 31
		79	0.08	6.32	Gadchiroli	Wadsa	Porla	Porla	Kitadi	795	N20 21 10	E 79 59 24
		700	0.08	56.00	Gadchiroli	Wadsa	Porla	Porla	Kitadi	797	N 20 20 32	E 79 59 12
		1373	0.08	109.84	Gadchiroli	Wadsa	Porla	Churchura	Churchura	54	N 20 15 48	E 80 02 14
	Total	**3797**		**303.76**								
iii	Construction, upgradation and maintenance of Protection camps/ Forest Custody etc.	1	20.00	20.00	Gadchiroli	Wadsa	Porla	Churchura	Churchura	3	N 20 16 07	E 80 02 49
		1	20.00	20.00	Gadchiroli	Wadsa	Porla	Porla	Porla	12	N 20 19 10	E 79 59 55
		1	6.00	6.00	Gadchiroli	Wadsa	Porla	Churchura	Churchura	3	N 20 16 21	E 80 02 13
		1	6.00	6.00	Gadchiroli	Wadsa	Bedgaon	Bedgaon	Bedgaon	1323	N 20º41'1"	E 80º27'16"
	Total	**4**		**52.00**								

Works proposed					Location of work						Latlong	
Rule No.	**Item of work**	**Quantity**	**Rate**	**Amount (Rs. in Lakhs**	**Circle**	**Division**	**Range**	**Round**	**Beat**	**Compartment No**	**Lattitude**	**Longitude**
iv	**Improving mobility of frontline staff by providing vehicles for forest protection & patrolling.**	LS	2.00	2.00	Gadchiroli	Gadchiroli						
		LS	2.00	2.00	Gadchiroli	Wadsa						
		LS	2.00	2.00	Gadchiroli	Allapalli						
		LS	2.00	2.00	Gadchiroli	Bhamragd						
		LS	2.00	2.00	Gadchiroli	Sironcha						
		0.00		**10.00**								
Total for Protection of plantations and forests		**3801.00**		**557.51**								
5(2)(f)	**Forest fire prevention and control operations**											
ii	Cutting and burning of fire lines	345	0.03	11.73	Gadchiroli	Wadsa	Porla	Porla	Porla	64	N 20 18 50	E 79 59 00
		345		**11.73**								
		335.19	0.02	6.70	Gadchiroli	Sironcha	Kamlapur	Asha	Chitveli -- 2	79	N 19 09 58	E 80 20 09
		75.00	0.02	1.50	Gadchiroli	Sironcha	Sironcha	Sironcha	Sironcha	182, 183 356	N 18 63 57	E 80 54 42.5
		75.00	0.02	1.50	Gadchiroli	Sironcha	Jimalgatta	Marpalli	Umanur	331	N 19 04 94	E 80 05 40
		50.00	0.02	1.00	Gadchiroli	Sironcha	Zinganur	Sirkonda	Sirkonda A	78	N 18 58 24	E 80 06 24
		50.00	0.02	1.00	Gadchiroli	Sironcha	Zinganur	Sirkonda	Sirkonda C	106	N 18 56 32	E 80 07 25
		50.00	0.02	1.00	Gadchiroli	Sironcha	Zinganur	Yedsili	Karjeli	218	N 18 56 37	E 80 14 09
		50.00	0.02	1.00	Gadchiroli	Sironcha	Zinganur	Mangigudam	Sirkonda E 1	101	N 18 53 54	E 80 05 58
		50.00	0.02	1.00	Gadchiroli	Sironcha	Zinganur	Zinganur	Rameshgudam	216	N 18 56 09	E 80 14 11
		50.20	0.02	1.00	Gadchiroli	Sironcha	Dechali	Petha	Petha	361	N 18 57 56.78	E 80 13 45.95
		50.20	0.02	1.00	Gadchiroli	Sironcha	Pranhita	Devalmari	Devalmari 2	261	N 19 16 54	E 79 58 52
		375.67	0.02	7.51	Gadchiroli	Sironcha	Asaralli	Asaralli	Laxmideopetha	7 PF	N -- 18 45 38	E --80 06 44
		1211.26		**24.23**								
	Total	**1556.26**		**35.96**								

Works proposed					Location of work						Latlong	
Rule No.	**Item of work**	**Quantity**	**Rate**	**Amount (Rs. in Lakhs**	**Circle**	**Division**	**Range**	**Round**	**Beat**	**Compartment No**	**Lattitude**	**Longitude**
iii	Fire watchers	20	0.50	10.00	Gadchiroli	Sironcha	Kamlapur	Asha	Chitveli - 2	79	N 19 09 58	E 80 20 09
		5	0.50	2.50	Gadchiroli	Sironcha	Sironcha	Sironcha	Sironcha	182, 183 356	N 18 63 57	E 80 54 42.5
		5	0.50	2.50	Gadchiroli	Sironcha	Jimalgatta	Jimalgatta	Jimalgatta	38	--	--
		20	0.50	10.00	Gadchiroli	Sironcha	Pranhita	--	--	--	--	--
		20	0.50	10.00	Gadchiroli	Sironcha	Asaralli	--	--	--	--	--
		17	0.50	8.50	Gadchiroli	Sironcha	Bamni	--	--	--	--	--
		27	0.50	13.50	Gadchiroli	Sironcha	Zinganur	--	--	--	--	--
		13	0.50	6.50	Gadchiroli	Sironcha	Dechali	Dechali	Dechali	376	--	--
		127		**63.50**								
		1	0.004	0.50	Gadchiroli	Bhamragd	Etapalli	Etapalli	Tambada	SE 370	N19"39'15	E80"15'30'
		1	0.004	0.50	Gadchiroli	Bhamragd	Etapalli	Etapalli	Etapalli	SE 350	N19"36'29	E 80"12'51'
		1	0.004	0.50	Gadchiroli	Bhamragd	Etapalli	Etapalli	Todasa	SE 375	N19"37'03'	E80"14'40'
		1	0.004	0.50	Gadchiroli	Bhamragd	Etapalli	Geda	Geda	SE 360	N19"43'53'	E80"12'00'
		1	0.004	0.50	Gadchiroli	Bhamragd	Etapalli	Geda	Ekansur	SE 255	N19"43'11'	E 80"16 '11'
		1	0.004	0.50	Gadchiroli	Bhamragd	Etapalli	Geda	Chanweli	SE 354	N19"50'29'	E80"11 '00'
		1	0.004	0.50	Gadchiroli	Bhamragd	Etapalli	Doevada	Doevada	SE 238	N19"43'56'	E80"18'26'
		1	0.004	0.50	Gadchiroli	Bhamragd	Etapalli	Doevada	Gattepalli	SE 249	N19"47'05'	E80"13'53'
		1	0.004	0.50	Gadchiroli	Bhamragd	Etapalli	Doevada	Petha k	SE 246	N19"47'08'	E80"16'12'
		1	0.004	0.50	Gadchiroli	Bhamragd	Etapalli	Halevara	Kukeli	SE 098	N19"46'10'	E80"24'27'
		1	0.004	0.50	Gadchiroli	Bhamragd	Etapalli	Halevara	Halevara	SE 093	N19"45'26.9'	E80"18'53.3'
		1	0.004	0.50	Gadchiroli	Bhamragd	Etapalli	Halevara	Kamake	SE 089	N19"46'59.7'	E80"21'24'
		1	0.004	0.50	Gadchiroli	Bhamragd	Etapalli	Petha	lajji	SE 266	N19"41'12'	E80"15'49'
		1	0.004	0.50	Gadchiroli	Bhamragd	Etapalli	Petha	Naguvadi	SE 237	N19"43'11'	E 80"16 '11'
		1	0.004	0.50	Gadchiroli	Bhamragd	Etapalli	Petha	Petha	SE 269	N19"38'31'	E80"17'54'
		1	0.004	0.50	Gadchiroli	Bhamragd	Etapalli	Pursalgondi	Pursalgondi	SE 303	N19"36'46'	E80"24'51'
		1	0.004	0.50	Gadchiroli	Bhamragd	Etapalli	Pursalgondi	Titoda	SE 311	N19"37'57'	E80"26'25'
		1	0.004	0.50	Gadchiroli	Bhamragd	Etapalli	Pursalgondi	Surjagad	SE 200	N19"37'15'	E80"22'55'
		1	0.004	0.50	Gadchiroli	Bhamragd	Etapalli	Burgi	Javeli	SE 101	N19"46'37'	E80"26'12'
		1	0.004	0.50	Gadchiroli	Bhamragd	Etapalli	Burgi	Burgi	SE 211	N19"44'45.11'	E 80"27'30.10'
		1	0.004	0.50	Gadchiroli	Bhamragd	Etapalli	Burgi	Kachaler	SE 106	N19"44'45'	E80"24'30'
		1	0.004	0.50	Gadchiroli	Bhamragd	Etapalli	Mohurli	Mohurli	SE 224	N19"39'35'	E80"23'45'
		1	0.004	0.50	Gadchiroli	Bhamragd	Etapalli	Mohurli	Hetalkasa	SE 220	N19"41'16'	E80"23'51'
		1	0.004	0.50	Gadchiroli	Bhamragd	Etapalli	Mohurli	Kudhari	SE 114	N19"41'51'	E80"19'28'
		1	0.004	0.50	Gadchiroli	Bhamragd	Etapalli	Wateli	Wateli	SE 205	N19"41'23'	E 80"27'21'
		1	0.004	0.50	Gadchiroli	Bhamragd	Etapalli	Wateli	Nainavadi	SE 207	N19"43'58'	E80"28'51'
		1	0.004	0.50	Gadchiroli	Bhamragd	Etapalli	Wateli	Jambhiya	SE 321	N19"38'30'	E80"28'35'
		1	0.004	0.50	Gadchiroli	Bhamragd	Etapalli	Parsalgondi	Parsalgondi	SE 277	N19"35'36'	E 80"18'47'
		1	0.004	0.50	Gadchiroli	Bhamragd	Etapalli	Parsalgondi	Gundapuri	SE 205	N19"41'23'	E80"27'21'

Works proposed					Location of work						Latlong	
Rule No.	**Item of work**	**Quantity**	**Rate**	**Amount (Rs. in Lakhs**	**Circle**	**Division**	**Range**	**Round**	**Beat**	**Compartment No**	**Lattitude**	**Longitude**
iii	Fire watchers	1	0.004	0.50	Gadchiroli	Bhamragd	Etapalli	Parsalgondi	Bande	SE 275	N19"35'06'	E80"21'24'
		1	0.004	0.50	Gadchiroli	Bhamragd	Etapalli	Etapalli	Etapalli	SE 350	N19"36'29	E80"12'51'
		1	0.004	0.50	Gadchiroli	Bhamragd	Etapalli	Etapalli	Etapalli	SE 350	N19"36'29	E80"12'51'
		1	0.004	0.50	Gadchiroli	Bhamragd	Etapalli	Etapalli	Etapalli	SE 350	N19"36'29	E80"12'51'
		1	0.004	0.50	Gadchiroli	Bhamragd	Etapalli	Etapalli	Etapalli	SE 350	N19"36'29	E80"12'51'
		1	0.004	0.50	Gadchiroli	Bhamragd	kasansur	kasansur	kasansur	82	N19 50 19	E8019 10
		1	0.004	0.50	Gadchiroli	Bhamragd	kasansur	kasansur	Gardapalli	177	N19 52 25	E8018 20
		1	0.004	0.50	Gadchiroli	Bhamragd	kasansur	kasansur	Jaweli	52	N19 54 06	E80 24 39
		1	0.004	0.50	Gadchiroli	Bhamragd	kasansur	Waghezari	Waghezari	84	N19 47 58	E80 19 47
		1	0.004	0.50	Gadchiroli	Bhamragd	kasansur	Waghezari	Zuri	179	N1951 33	E80 16 29
		1	0.004	0.50	Gadchiroli	Bhamragd	kasansur	Waghezari	Sewari	180	N19 50 44	E80 16 20
		1	0.004	0.50	Gadchiroli	Bhamragd	kasansur	Ghotsur	Ghotsur	68	N 19 51 42	E80 24 21
		1	0.004	0.50	Gadchiroli	Bhamragd	kasansur	Ghotsur	Bhumkam	54	N 53 06	E80 26 50
		1	0.004	0.50	Gadchiroli	Bhamragd	kasansur	Ghotsur	Manewara	74	N 19 49 37	E80 26 47
		1	0.004	0.50	Gadchiroli	Bhamragd	kasansur	Reknar	Reknar	154	N19 56 00	E80 19 37
		1	0.004	0.50	Gadchiroli	Bhamragd	kasansur	Reknar	Mandoli	125	N19 55 46	E80 14 51
		1	0.004	0.50	Gadchiroli	Bhamragd	kasansur	Reknar	Teka	131	N19 58 39	E80 19 50
		1	0.004	0.50	Gadchiroli	Bhamragd	kasansur	Kotmi	Kotmi	173	N19 51 25	E80 15 36
		1	0.004	0.50	Gadchiroli	Bhamragd	kasansur	Kotmi	Paidy	122	N19 55 30	E80 12 51
		1	0.004	0.50	Gadchiroli	Bhamragd	kasansur	Kotmi	Kondawahi	181	N19 51 46	E80 15 17
		1	0.004	0.50	Gadchiroli	Bhamragd	kasansur	Jarawandi	Jarawandi	4	N20 01 17	E80 26 36
		1	0.004	0.50	Gadchiroli	Bhamragd	kasansur	Jarawandi	Wadasakala	1	N20 00 44	E80 28 26
		1	0.004	0.50	Gadchiroli	Bhamragd	kasansur	Jarawandi	Dolanda	6	N20 01 04	E80 28 26
		1	0.004	0.50	Gadchiroli	Bhamragd	kasansur	Bhapda	Bhapda	31	N19 57 02	E80 31 22
		1	0.004	0.50	Gadchiroli	Bhamragd	kasansur	Bhapda	Sohgaon	26	N20 00 25	E80 31 33
		1	0.004	0.50	Gadchiroli	Bhamragd	kasansur	Bhapda	Wedmagd	25	N20 00 25	E80 31 33
		1	0.004	0.50	Gadchiroli	Bhamragd	kasansur	Kasurwahi	Kasurwahi	39	N19 58 11	E80 24 03
		1	0.004	0.50	Gadchiroli	Bhamragd	kasansur	Kasurwahi	Ropi	49	N19 54 56	E80 22 54
		1	0.004	0.50	Gadchiroli	Bhamragd	kasansur	Kasurwahi	Morawahi	42	N19 57 19	E80 21 48
		1	0.004	0.50	Gadchiroli	Bhamragd	kasansur	Kotmi	Paidy	122	N19 55 30	E80 12 51
		1	0.004	0.50	Gadchiroli	Bhamragd	kasansur	Reknar	Reknar	154	N19 56 00	E80 19 37
		1	0.004	0.50	Gadchiroli	Bhamragd	kasansur	kasansur	kasansur	82	N19 50 19	E8019 10
		1	0.004	0.50	Gadchiroli	Bhamragd	kasansur	Jarawandi	Jarawandi	4	N20 01 17	E80 26 36
		62		**31.17**								
	Total	**189**	**0**	**94.67**								
	Total for fire prevention and control operations	**1745**		**130.63**								
	Total for Forest Protection	**5546.26**		**688.14**								

Works proposed					Location of work						Latlong	
Rule No.	**Item of work**	**Quantity**	**Rate**	**Amount (Rs. in Lakhs**	**Circle**	**Division**	**Range**	**Round**	**Beat**	**Compartment No**	**Lattitude**	**Longitude**
5(2)(g)	**Soil and moisture conservation works in the forest**											
(iii)	Construction of Gabian Badhara	20	0.50	10.00	Gadchiroli	Sironcha	Asaralli	--	--	--	--	
	Total	**20**		**10.00**								
(iv)	Construction of Cement Badhara	1	15.00	15.00	Gadchiroli	Sironcha	Asaralli	--	--	--	--	
	Total	**1**		**15.00**								
(i)	Khodatale Creation	1	3.00	3.00	Gadchiroli	Wadsa	Armori	Armori	Armori	42	N20 48 01	E80 04 22
		1	3.00	3.00	Gadchiroli	Wadsa	Armori	Armori	Injewari	791	N20 22 28	E80 00 59
		1	3.00	3.00	Gadchiroli	Wadsa	Armori	Armori	Ravi	55	N20 30 45	E79 58 06
		1	3.00	3.00	Gadchiroli	Wadsa	Armori	Palasgaon	Manjewada	33	N20 30 14	E79 59 74
		1	3.00	3.00	Gadchiroli	Wadsa	Armori	Vairagad	Sukala	45	N20 25 38	E80 06 41
		1	3.00	3.00	Gadchiroli	Wadsa	Porla	Porla	Porla	13	N 20 19 49	E 79 59 22
		1	3.00	3.00	Gadchiroli	Wadsa	Porla	Shirshi	Naroti	17	N 20 19 45	E 80 07 10
		1	3.00	3.00	Gadchiroli	Wadsa	Porla	Shirshi	Bori	50	N 20 22 29	E 80 01 43
		1	3.00	3.00	Gadchiroli	Wadsa	Wadsa	Wadsa	Shivrajpur	93	N 20°34'13"	E 80°00'21'
		1	3.00	3.00	Gadchiroli	Wadsa	Wadsa	Wadsa	Usegaon	90	N 20°32'18"	E 79°59'37'
		1	3.00	3.00	Gadchiroli	Wadsa	Wadsa	Shirpur	Bhagwanpur	75	N 20°33'02"	E 80°07'12'
		1	3.00	3.00	Gadchiroli	Wadsa	Wadsa	Shirpur	Shirpur	78	N 20°33'23"	E 80°08'07'
		1	3.00	3.00	Gadchiroli	Wadsa	Wadsa	Shankarpur	Ravanwadi	103	N 20°41'08"	E 80°06'02'
		1	3.00	3.00	Gadchiroli	Wadsa	Wadsa	Shankarpur	Boldha	102	N 20°41'55"	E 80°03'42'
		1	3.00	3.00	Gadchiroli	Wadsa	Kurkheda	Wadegaon	Dhamditola	149	N 20.39.52	E 80.12.4
		1	3.00	3.00	Gadchiroli	Wadsa	Kurkheda	Wadegaon	Anjantola	949	N 20.39.44	E 80.11.58
		1	3.00	3.00	Gadchiroli	Wadsa	Kurkheda	Palasgad	Dhanori	172	N 20.40.11	E 80.16.15
		1	3.00	3.00	Gadchiroli	Wadsa	Kurkheda	Palasgad	Palasgad	1013	N 20.38.29	E 80.17.34
		1	3.00	3.00	Gadchiroli	Wadsa	Delanwadi	Delanwadi	Sonsari	263	N 20° 50' 75"	E 80° 31 '18"
		1	3.00	3.00	Gadchiroli	Wadsa	Delanwadi	Delanwadi	Sonerangi	309	N 20° 26' 40"	E 80° 11 ' 9"
		20		**60.00**								

Works proposed					Location of work						Latlong	
Rule No.	**Item of work**	**Quantity**	**Rate**	**Amount (Rs. in Lakhs**	**Circle**	**Division**	**Range**	**Round**	**Beat**	**Compartment No**	**Lattitude**	**Longitude**
(i)	Khodatale Creation	1	3.00	3.00	Gadchiroli	Bhamragad	Bhamragad	Irapnar	Juvvi	809	N 19 22 50.90	E 080 38 48.60
		1	3.00	3.00	Gadchiroli	Bhamragad	Bhamragad	Irapnar	Dhodraj	793	N 19 24 64.6	E 80 39 27
		1	3.00	3.00	Gadchiroli	Bhamragad	Bhamragad	Irapnar	Dhodraj	792	N 19 24 75.0	E 80 39 18.8
		1	3.00	3.00	Gadchiroli	Bhamragad	Bhamragad	Laheri	Gundenur	765	N 19 26 08	E 80 45 59
		2	3.00	6.00	Gadchiroli	Bhamragad	Etapalli	Geda	Geda	259	N 19 67 60	E 80 21 54
		2	3.00	6.00	Gadchiroli	Bhamragad	Etapalli	Geda	Geda	353	N 19 70 26	E 80 19 51
		2	3.00	6.00	Gadchiroli	Bhamragad	Etapalli	Geda	Geda	352	N 19 70 20	E 80 19 42
		1	3.00	3.00	Gadchiroli	Bhamragad	Etapalli	Geda	Ekansur	264	N 19 41 28	E 80 15 00
		1	3.00	3.00	Gadchiroli	Bhamragad	Etapalli	Geda	Ekansur	255	N 19 43 35	E 80 14 12
		1	3.00	3.00	Gadchiroli	Bhamragad	Etapalli	Geda	Ekansur	261	N 19 43 02	E 80 14 06
		1	3.00	3.00	Gadchiroli	Bhamragad	Etapalli	Geda	Ekansur	263	N 19 42 40	E 80 15 02
		1	3.00	3.00	Gadchiroli	Bhamragad	Etapalli	Pursalbondi	Surjagad	296	N 19 33 40	E 80 24 20
		1	3.00	3.00	Gadchiroli	Bhamragad	Gatta	Gatta	Gatta	451	N 19 39 06	E 80 32 56
		1	3.00	3.00	Gadchiroli	Bhamragad	Gatta	Alenga	Alenga	496	N 19 34 27	E 80 27 30
		1	3.00	3.00	Gadchiroli	Bhamragad	Gatta	Kothi	Kothi	510	N 19 32 21	E 80 36 41
		1	3.00	3.00	Gadchiroli	Bhamragad	Gatta	Gardewada	Koinwarshi	431	N 19 39 35	E 80 37 29
		1	3.00	3.00	Gadchiroli	Bhamragad	Gatta	Nargunda	Kiyar	529	N 19 46 12	E 80 58 34
		20		**60.00**								
	Total	**40**		**120.00**								
(v)	Deep CCt	15	9.00	9.00	Gadchiroli	Gadchiroli	Kunghada	Jogna	Murmuri	36	N 190 95' 4416"	E 80 36'142"
		20	18.00	18.00	Gadchiroli	Gadchiroli	Kunghada	Jogna	Kurud	1	N 19 948' 085"	E 79 92' 41"
		7	0.97	6.77	Gadchiroli	Sironcha	Asaralli	--	--	--	--	--
	Total	**42**		**33.77**								
	Total SMC Works	**103**		**178.77**								

Works proposed					Location of work						Latlong	
Rule No.	**Item of work**	**Quantity**	**Rate**	**Amount (Rs. in Lakhs**	**Circle**	**Division**	**Range**	**Round**	**Beat**	**Compartment No**	**Lattitude**	**Longitude**
	Wildlife Management & Man --animal conflict mitigation											
5(2)(i)	**Improvement of wildlife habitat as provided in the approved wildlife management plan or working plan**											
i	Eradication of invasive species	1	2.00	2.00	Gadchiroli	Wadsa	Armori	Armori	Armori	42	N20 46 25	E80 08 27
		1	2.00	2.00	Gadchiroli	Wadsa	Armori	Armori	Ravi	55	N20 30 47	E79 5314
		1	2.00	2.00	Gadchiroli	Wadsa	Armori	Armori	Armori	67	N20 29 54	E79 54 50
		1	2.00	2.00	Gadchiroli	Wadsa	Porla	Porla	Sakhara	570	N 20 15 32	N 79 59 41
		1	2.00	2.00	Gadchiroli	Wadsa	Porla	Porla	Sakhara	569	N 20 15 06	E 79 59 46
		1	2.00	2.00	Gadchiroli	Wadsa	Porla	Churchura	Churchura	575	N 20 15 02	E 80 00 01
		1	2.00	2.00	Gadchiroli	Wadsa	Porla	Porla	Sakhara	581	N 20 16 40	E 79 59 22
		1	2.00	2.00	Gadchiroli	Wadsa	Porla	Porla	Sakhara	568	N 20 14 21	E 79 59 51
		1	2.00	2.00	Gadchiroli	Wadsa	Porla	Porla	Sakhara	567	N 20 13 54	E 79 59 47
	Total for Improvement of wildlife habitat	**9**		**18.00**								
	Total for Wildlife Management & Man -- animal conflict mitigation	**9**		**18.00**								
	Grand Total for Activities under not less than 80% component	**7513.71**		**2473.97**								
5 (3)	**Works under not more than 20 % component (Rule 5 (3))**											
5(3)(a)	**Establishment, up --gradation and maintenance of modern nurseries and other planting stock production facilities for production of quality planting materials**											
i	Establishment of modern / high --tech nurseries	**1**	**10.00**	**10.00**	Gadchiroli	Wadsa	Porla	Porla	Porla	64	N 20 18 51	E 79 59 0
	Total	**1**		**10.00**								
5(3)(d)	**Construction, up-gradation and maintenance of inspection paths, forest roads in forest area, fire lines, watch towers, check posts and timber depots**	1	8.5	8.50	Gadchiroli	Gadchiroli	Gadchiroli	Gadchiroli	Gadchiroli	--	N 20°8'50"	E 80°56'57"
		1	10.00	10.00	Gadchiroli	Gadchiroli	Gadchiroli	Gurwala	Yevali	147	N 20°4'49"	E 80°2'37"
	Total	**2**		**18.50**								

Works proposed					Location of work						Latlong	
Rule No.	**Item of work**	**Quantity**	**Rate**	**Amount (Rs. in Lakhs**	**Circle**	**Division**	**Range**	**Round**	**Beat**	**Compartment No**	**Lattitude**	**Longitude**
5(3)(e)	**Construction of residential and official buildings in forests for front line staffs deployed for protection of forest and wildlife**											
i	Construction of Type I Quarters	1	22.00	22.00	Gadchiroli	Wadsa	Delanwadi	Delanwadi	Sonerangi	79/1	N 20 28 622	E 80 97 67
		1	22.00	22.00	Gadchiroli	Wadsa	Wadsa	Shankarpur	Kasari	905	N 20°37'812"	E 80°02'764'
		2		**44.00**								
		1	22.00	22.00	Gadchiroli	Sironcha	Kamlapur	Kamlapur	Kamlapur I	33	N 19 10 15	E 80 12 22
		1	22.00	22.00	Gadchiroli	Sironcha	Sironcha	Sironcha	Sironcha	63	N 15 50 54.8	E 79 57 59.3
		2		**44.00**								
		1	22.00	22.00	Gadchiroli	Gadchiroli	E.Murumgaon	E.Murumgaon	Murumgaon	681	N 20 19' 36"	E 80 28'16"
		1	22.00	22.00	Gadchiroli	Gadchiroli	W.Murumgaon	Sursundi	Sursundi	626	N 20 20' 51"	E 80 22' 36"
		2		**44.00**								
		1	22.00	22.00	Gadchiroli	Bhamragad	Bhamragad	Bhamragad	Bhamragad	700	N 19 41 30.79	E 080 58 91.36
		1	22.00	22.00	Gadchiroli	Bhamragad	Tadgaon	Mannerajaram	Mannerajaram	596	N 19 29 35 02	E 080 40 82 11
		2		**44.00**								
		1	**22.00**	**22.00**	Gadchiroli	Allapalli	Aheri	Aheri	Aheri	191	N-19.25.00.2	E-80.00.53.6
	Total	**9**		**198.00**								
ii	Construction of Type II Quarters	1	26.00	26.00	Gadchiroli	Wadsa	Porla	Churchura	Churchura	583	N 20 15 51	E 80 01 30
		1	26.00	26.00	Gadchiroli	Sironcha	Kamlapur	Kamlapur	Kamlapur I	33	N 19 10 20	E 80 12 18
		1	26.00	26.00	Gadchiroli	Gadchiroli	E.Murumgaon	E.Murumgaon	Sursundi	626	N 20 25' 50"	E 80 22' 37"
		1	26.00	26.00	Gadchiroli	Bhamragad	Tadgaon	Hemalkasa	Hemalkasa	569	N 19 25 20	E 80 34 13
		1	26.00	26.00	Gadchiroli	Allapalli	Aheri	Aheri	Aheri	191	N-19.24.59.06	E-80.00.54.4
	Total	**5**		**130.00**								
iii	Construction of Type - III Quarters	1	36.00	36.00	Gadchiroli	Wadsa	Bedgaon	Bedgaon	Bedgaon	1323	N 20º41'1"	E 80º27'16"
		1	36.00	36.00	Gadchiroli	Sironcha	Kamlapur	Kamlapur	Kamlapur I	33	N 19 10 18	E 80 12 20
		1	36.00	36.00	Gadchiroli	Gadchiroli	W.Murumgaon	W.Murumgaon	Murumgaon	681	N 20 19' 36"	E 80 28'16"
		1	36.00	36.00	Gadchiroli	Bhamragad	Etapalli	Etapalli	Etapalli	345	N 19 35 46	E 80 13 42
		1	36.00	**36.00**	Gadchiroli	Allapalli	Aheri	Aheri	Aheri	191	N-19.24.59.0	E-80.00.54.9
	Total	**5**		**180.00**								

Works proposed					Location of work						Latlong	
Rule No.	**Item of work**	**Quantity**	**Rate**	**Amount (Rs. in Lakhs**	**Circle**	**Division**	**Range**	**Round**	**Beat**	**Compartment No**	**Lattitude**	**Longitude**
vi	Construction of Range office	1	45.00	45.00	Gadchiroli	Wadsa	Armori	Armori	Armori	625	N20 46 56	E79 98 82
		1	45.00	45.00	Gadchiroli	Sironcha	Kamlapur	Kamlapur	Kamlapur I	33	N 19 10 14	E 80 12 15
		1	45.00	**45.00**	Gadchiroli	Gadchiroli	W.Murumgaon	W.Murumgaon	Murumgaon	681	N 20 19' 37"	E 80 28' 16"
		1	45.00	**45.00**	Gadchiroli	Bhamragad	Ettapalli	Ettapalli	Ettapalli	345	N 19 35 45	E 80 13 40
		1	**45.00**	**45.00**	Gadchiroli	Allapalli	Aheri	Aheri	Aheri	191	N-19.24.56.3	E-80.00.55.6
	Total	**5**		**225.00**								
ix	Amenities for Woman Front line Staff	**1**	14.00	**14.00**	Gadchiroli	Bhamragarh	Bhamragarh	Bhamragarh	Bhamragarh		N 19 43 38 22	E 80 05 32 73
		1	14.00	14.00	Gadchiroli	Sironcha	Kamlapur	Kamlapur	Kamlapur I	33	N 19 10 13	E 80 12 11
		1	14.00	14.00	Gadchiroli	Gadchiroli	Gadchiroli	Gadchiroli	Gadchiroli	--	N 20°11'13"	E 80°00'28"
	Total	**3**		**42.00**								
Construction of residential and official buildings in forests for front line staffs deployed for protection of forest and wildlife		**27**		**775**								
5(3)(i)	Publicity --cum --awareness programme and exhibition on the various schemes being implemented by the State Authority from State Fund	LS	- --	2.00	Gadchiroli	Gadchiroli						
		LS	- --	2.00	Gadchiroli	Wadsa						
		LS	--	2.00	Gadchiroli	Allapalli						
		LS	--	2.00	Gadchiroli	Bhamragad						
		LS	--	2.00	Gadchiroli	Sironcha						
	Total			**10.00**								
	Total for works under not more than 20% component			**813.50**								
	Grand Total for NPV			**3287.47**								

ANNUAL PLAN OF OPERATIONS 2022-23

FORMAT VII A---- Forestry and other activities proposed under Net Present Value amount (Please see Rule no. 5(2), 5(3), and proviso under Rule 5(3) (NPV - 04)

Kolhapur Territorial Circle

Works proposed					Location of work						Latlong	
Rule No.	**Item of work**	**Quantity**	**Rate**	**Amount (Rs. in Lakhs**	**Circle**	**Division**	**Range**	**Round**	**Beat**	**Compartment No**	**Lattitude**	**Longitude**
1	**2**	**3**	**4**	**5**	**6**	**7**	**8**	**9**	**10**	**11**	**12**	**13**
5 (2)	**Works under Not less than 80 % component (Rule 5 (2))**											
5 (2) (b)	**Artificial Regeneration**											
	NPV AR 4th Year Plantation	5	0.180	0.90	Kolhapur	Kolhapur	Gargoti	Kur	Minche. kh	162/1 A	N 16.311121	E 74.1231
		5	0.180	0.90	Kolhapur	Kolhapur	Gargoti	Kur	Aambavne	317 B	N 16.32739	E 74.17006
		15	0.180	2.70	Kolhapur	Kolhapur	Gargoti	Kur	Gargoti	293 A B	N 16.29061	E 74.115927
		25	0.180	4.50	Kolhapur	Kolhapur	Gargoti	Kur	Shengaon	288	N 16.28923	E 74.07232
		15	0.180	2.70	Kolhapur	Kolhapur	Kadgaon	Kadgaon	Mathgaon	418 B	N 16.1198	E 74.00242
		5	0.180	0.90	Kolhapur	Kolhapur	Chandgad	Mirvel	Isapur	34,35,36	N 15.84063	E 74.08937
		10	0.180	1.80	Kolhapur	Kolhapur	Aajra	South Aajra	Polgaon	244	N 16.075813	E 74.213957
		25	0.180	4.50	Kolhapur	Kolhapur	Aajra	South Aajra	Iete	219	N 16.07.83 55	E 74.15977
		20	0.180	3.60	Kolhapur	Kolhapur	Aajra	South Aajra	Aavandi	223	N 16.0662756	E 74.129086
		25	0.180	4.50	Kolhapur	Kolhapur	Radhanagri	Mhasurli	Rashiwde	153	N 16.49086	E 74.06704
		15	0.180	2.70	Kolhapur	Kolhapur	Radhanagri	Mhasurli	Mhasurli	87 part	N 16.5793	E 74.0091
		30	0.180	5.40	Kolhapur	Kolhapur	Malkapur	Shittur	Shirale Tarf Vesun	1025	N 17.09	E 73.85
		10	0.180	1.80	Kolhapur	Kolhapur	Pendakhale	Savardi	Buranbal	867	N 16.809167	E 73.803611
		10	0.180	1.80	Kolhapur	Kolhapur	Pendakhale	Savardi	Savardi	96,99	N 16.76423	E 73.899008
		25	0.180	4.50	Kolhapur	Kolhapur	Pendakhale	Y.jugai	Shembavne	1102	N 16.781627	E 73.758458
		10	0.180	1.80	Kolhapur	Kolhapur	Pendakhale	Y.jugai	Gelavde	1096 A	N 16.84277	E 73.816247
		10	0.180	1.80	Kolhapur	Kolhapur	Pendakhale	Y.jugai	Vishalgad	1083	N 16.891903	E 73.750342
		15	0.180	2.70	Kolhapur	Kolhapur	Karveer	Karveer	Sangrul	686	N 16.728611	E 74.145
		10	0.180	1.80	Kolhapur	Kolhapur	Karveer	Kapshi	Kapshi	677 C	N 16.367559	E 74.355759
		5	0.180	0.90	Kolhapur	Kolhapur	Karveer	Kapshi	Kapshi	685 B	N 16.342554	E 74.313142
		10	0.180	1.80	Kolhapur	Kolhapur	Panhala	Panhala	Panhala	821 B	N 16.82782	E 74.09445
		15	0.180	2.70	Kolhapur	Kolhapur	Panhala	Manvad	Manvad	896	N 16.734444	E 73.904167
		20	0.180	3.60	Kolhapur	G.Bavda	G.Bawda	Nivade	Salvan	815	N 16.607778	E 73.926389
	Kolhapur Division Total	335	4.14	60.30						7601		

Works proposed					Location of work						Latlong	
Rule No.	Item of work	Quantity	Rate	Amount (Rs. in Lakhs	Circle	Division	Range	Round	Beat	Compartment No	Lattitude	Longitude
1	2	3	4	5	6	7	8	9	10	11	12	13
	Artificial Regeneration 4th Year Works	5	0.180	0.90	Kolhpur	Satara	Satara	Satara	Satara	174	N 17.4307	E 74.053
		5	0.180	0.90	Kolhpur	Satara	Satara	Satara	Kanehri	266	N 17.74.011/	E 73.84422
		10	0.180	1.80	Kolhpur	Satara	Satara	Satara	Satara	260	N 17.4553/	E 73.5859
		20	0.180	3.60	Kolhpur	Satara	Satara	Satara	Satara	260	N 17.4553	E 73.5859
		10	0.180	1.80	Kolhpur	Satara	Satara	Satara	Bharatgaon	648	N 17.3013	E 74.0427
		5	0.180	0.90	Kolhpur	Satara	Patan	Malhapeth	Chaphal	448b	N 17.4319.2	E 17.431902
		25	0.180	4.50	Kolhpur	Satara	Patan	Patan	Patan	461	N 19.22371	E 37.498
		25	0.180	4.50	Kolhpur	Satara	Patan	Sanbur	Paneri	5,33,534	N 17.257997	E 73.81368
		25	0.180	4.50	Kolhpur	Satara	Patan	Sanbur	Sanbur	538	N 17.241264	E 73.97253
		25	0.180	4.50	Kolhpur	Satara	Patan	Pachgani	Pachgani	469	N 17.300915	E 73.076811
		10	0.180	1.80	Kolhpur	Satara	Karad	Masur	Kiwal	665	N 17.300915	E 73.076811
		10	0.180	1.80	Kolhpur	Satara	Karad	Masur	Kiwal	659	N 17.40692	E 74.20942
		5	0.180	0.90	Kolhpur	Satara	Karad	Malkapur	Oglewadi	676	N 1731163	E 7426833
		5	0.180	0.90	Kolhpur	Satara	Karad	Masur	Whageri	670	N 1735303	E 7418664
		10	0.180	1.80	Kolhpur	Satara	Koregaon	Wathar	Wagholi	189	N 17.950712	E 74.10684
		10	0.180	1.80	Kolhpur	Satara	Koregaon	Wathar	Banawadi	164	N 17.83869	E 74.1084
		10	0.180	1.80	Kolhpur	Satara	Koregaon	Wathar	Randullbad	153	N 17.942765	E 74.02409
		5	0.180	0.90	Kolhpur	Satara	Khandala	Lonand	Padali	804	N 18035	E 74.926
		5	0.180	0.90	Kolhpur	Satara	Khandala	Khandala	Kanehri	792	N 180406	E 735807
		10	0.180	1.80	Kolhpur	Satara	Khandala	Khandala	Shirwal	794	N 18624	E 735955
		10	0.180	1.80	Kolhpur	Satara	Khandala	Khandala	Shirwal	793	N 18623	E 74219
		5	0.180	0.90	Kolhpur	Satara	Khandala	Lonand	Padali	804	N 18056	E 74619
		10	0.180	1.80	Kolhpur	Satara	Dahiwadi	Dahiwadi	malwadi	869	N 1743732	E 7427213
		15	0.180	2.70	Kolhpur	Satara	Dahiwadi	Dahiwadi	malwadi	868	N 1740024	E 7428109
		10	0.180	1.80	Kolhpur	Satara	Dahiwadi	Dahiwadi	Dahiwadi	864	N 1740719	E 7428379
		10	0.180	1.80	Kolhpur	Satara	Dahiwadi	Dahiwadi	Bijwadi	880	N 1749167	E 7431235
		25	0.180	4.50	Kolhpur	Satara	Vaduj	Mayani	Kaledhon	838	N 17.27.28.02	E 7440.31.97
		10	0.180	1.80	Kolhpur	Satara	Vaduj	Mayani	Pachvad	838	N 17.48.7.419	E 74.66.9737
		15	0.180	2.70	Kolhpur	Satara	Vaduj	Mayani	Pachvad	840	N 17.44.8448	E 74.64169
		10	0.180	1.80	Kolhpur	Satara	Vaduj	Mayani	Mayani	836	N 17.24.14.46	E 74.28.39.88
		10	0.180	1.80	Kolhpur	Satara	Vaduj	Pusegaon	Pusegaon	827	N 17.707193	E 74340585
		10	0.180	1.80	Kolhpur	Satara	Vaduj	Pusegaon	Pusegaon	827	N 17.708979	E 74395608
	Satara Division Total	**375**	**6**	**67.50**								

Works proposed					Location of work						Latlong	
Rule No.	**Item of work**	**Quantity**	**Rate**	**Amount (Rs. in Lakhs**	**Circle**	**Division**	**Range**	**Round**	**Beat**	**Compartment No**	**Lattitude**	**Longitude**
1	**2**	**3**	**4**	**5**	**6**	**7**	**8**	**9**	**10**	**11**	**12**	**13**
	NPV AR 4th Year Plantation	25	0.180	4.50	Kolhapur	Sangli	Jath	Vhaspeth	Ankalagi	332	N 16°58'36"	E 75°39'43"
		25	0.180	4.50	Kolhapur	Sangli	Jath	Vhaspeth	Ankalagi	293	N 17°8'48"	E 75°28'39"
		20	0.180	3.60	Kolhapur	Sangli	Atpadi	Atpadi	Atpadi	142,143 part	N 17.568	E 74.98491
	Sangli Division Total	**70**	**0.54**	**12.6**								
	Plantation along river banks (as per ICFRE DPR) (National Authority Scheme)	LS		30	Kolhapur	Kolhapur						
		LS		30	Kolhapur	Satara						
		LS		30	Kolhapur	Sawantwadi						
		LS		30	Kolhapur	Sangli						
		0		**120**								
	Grand Total 5 (2) (b)	**780.00**		**260.40**								
5 (2) (d)	**Protection Of Plantations and Forests**											
	Survey, Demarcation											
	Boundary Demarcation	136.18	0.027	3.70	Kolhapur	Kolhapur	Malkapur	Malkapur,Bambavde,Shittur, Varun	All	1044 to 1055,1095 to 1102	N 16°534'7.56" N 16°5529.8"	E 73°50'1.03" E 73.5347.54"
		20.6	0.027	0.60	Kolhapur	Kolhapur	Radhangri	Sarvde	Frale,Kandalgaon	5,08,509	N 16°55'43.1"	E73°51'38.85"
		42.15	0.027	1.20	Kolhapur	Kolhapur	Chandgad	Chandgad,Ksnur Kh.	Kanur,Bujavde	47,60 to 81, 102 to 104,117 ,118, 133	N 16°1'39.79"	E 74°917.9"
		38	0.027	1.10	Kolhapur	Kolhapur	Gaganbavda	Gaganbavda,Nivade	Gaganbavda,Nivade	778 to784,802 to 809	N 16°34'12.14" N 16°41'54.56"	E 73°5424.9" E 73°58'15.9
		45	0.027	1.30	Kolhapur	Kolhapur	Panhala	Panhala	Panhala, Kotoli	915 to 935	N 16°4'15.6"	E 73°53'28.93
		90	0.027	2.50	Kolhapur	Kolhapur	Gargoti	Gargoti,Kur,Pimpalgaon	Gargoti,Kur	281 to 290,324 to 330	N 16°17'20.46 " N 16°15'48.51"	E 73°43.96.1 " E 73°23'01.1"
		100	0.027	2.70	Kolhapur	Kolhapur	Aajara	N.Aajara,Dhngarmola	Mligre,	236 to 274	N 16°34'15.4"	E 74°1214.97"
	Total	**471.93**		**13.10**								

Works proposed					Location of work						Latlong	
Rule No.	Item of work	Quantity	Rate	Amount (Rs. in Lakhs	Circle	Division	Range	Round	Beat	Compartment No	Lattitude	Longitude
1	2	3	4	5	6	7	8	9	10	11	12	13
	Survey, Demarcation & Fencing of Sensitive forest areas	2000	1.50	3.00	Kolhapur	Sangli	Sangli	Bhose	Shipur	G.No.52	N 16 88 93.45	E 74 81 68.27
		4000	1.50	6.00	Kolhapur	Sangli	Sangli	K.Mankahal	K.Mankhal	251	N 17 06 57.53	E 74 54 46.85
		3000	1.50	4.50	Kolhapur	Sangli	Sangli	K.Mankahal	Kuktoli	241	N 17 04 14.56	E 74 57 03.06
		2000	1.50	3.00	Kolhapur	Sangli	Sangli	K.Mankahal	Kuktoli	239	N 17 03 16.83	E 74 57 30.67
		2000	1.50	3.00	Kolhapur	Sangli	Sangli	K.Mankahal	Kuktoli	229	N 17 03 15.29	E 74 55 20.46
		5000	1.50	7.50	Kolhapur	Sangli	Sangli	K.Mankahal	Kuktoli	231	N 17 14 30.00	E 74 58 28.70
		39.43	0.02	0.79	Kolhapur	Sangli	Jath	Jath	Jath	260	N 17'05'48"	E 75'13'34
		29.34	0.02	0.59	Kolhapur	Sangli	Jath	Jath	Hivare	237	N 17'6'43	E 75'2'4
		13.24	0.02	0.26	Kolhapur	Sangli	Jath	Jath	Hivare	238	N 17'6'43	E 75'2'9
		16.56	0.02	0.33	Kolhapur	Sangli	Jath	Jath	Hivare	335	N 17'6'43	E 75'2'54
		51.76	0.02	1.04	Kolhapur	Sangli	Jath	Vhaspeth	Sordi	281	N 17'04'46	E 75'22'25
		49.66	0.02	0.99	Kolhapur	Sangli	Jath	Vhaspeth	Vhaspeth	294	N 17'8'75	E 75'11'62
		3.46	0.02	0.07	Kolhapur	Sangli	Jath	Muchandi	Muchandi	278	N 17'53'61	E 75'42'52
		21.05	0.02	0.42	Kolhapur	Sangli	Jath	Muchandi	Asangi Turk	301	N 16'89'28	E 75'5145
		30	0.02	0.60	Kolhapur	Sangli	Khanapur-Vita	Vita	Vita	138	$17^0$17'19.2"	$74^0$33'36.5"
		30	0.02	0.60	Kolhapur	Sangli	Kadegaov-	Kadepur	Kadepur	109	17'13 50.47	74'16'16.58
	Total	**18284.50**	**9.20**	**32.69**								
	Boundry Pillar Class I	30	0.08	2.40	Kolhapur	Sangli	Jath	Jath	Jath	267	N 17'01'55	E 75'13'50
		20	0.08	1.60	Kolhapur	Sangli	Jath	Jath	Jath	260	N 17'01'55	E 75'13'50
		10	0.08	0.80	Kolhapur	Sangli	Jath	Jath	Jath	266	N 17'06'50	E 75'08'46
		10	0.08	0.80	Kolhapur	Sangli	Jath	Jath	Dafalapur	271	N 16'59'36"	E 75'08'12
		15	0.08	1.20	Kolhapur	Sangli	Jath	Jath	Dafalapur	270	N 16'59'38"	E 75'08'19
		7	0.08	0.56	Kolhapur	Sangli	Jath	Jath	Hivare	236	N 17'6'43	E 75'2'9
		8	0.08	0.64	Kolhapur	Sangli	Jath	Jath	Hivare	238	N 17'6'54	E 75'2'9
		15	0.08	1.20	Kolhapur	Sangli	Jath	Jath	Hivare	237	N 17'6'43	E 75'2'4
		9	0.08	0.72	Kolhapur	Sangli	Jath	Jath	Hivare	335	N 17'6'43	E 75'2'54
		45	0.08	3.60	Kolhapur	Sangli	Jath	Vhaspeth	Sordi	276	N 17'04'55"	E 75'22'25
		25	0.08	2.00	Kolhapur	Sangli	Jath	Vhaspeth	Vhaspeth	288	N 17'6'47	E 75'09'06
		35	0.08	2.80	Kolhapur	Sangli	Jath	Shegaon	Walekhindi	255	N 17'09'10	E 75'11'48
		15	0.08	1.20	Kolhapur	Sangli	Jath	Shegaon	Walekhindi	253	N 17'08'10	E 75'11'60
		15	0.08	1.20	Kolhapur	Sangli	Jath	Muchandi	Muchandi	278	N 17'53'61	E 75'42'52
		8	0.08	0.64	Kolhapur	Sangli	Jath	Muchandi	Asangi Turk	298	N 16'99'28	E 75'51'95
		1	0.08	0.08	Kolhapur	Sangli	Jath	Muchandi	Asangi Turk	299	N 16'99'28	E 75'51'95
		9	0.08	0.72	Kolhapur	Sangli	Jath	Muchandi	Asangi Turk	300	N 16'95'55	E 75'51'75
		7	0.08	0.56	Kolhapur	Sangli	Jath	Muchandi	Asangi Turk	301	N 16'89'28	E 75'5145
	Total	**284**		**22.72**								

Works proposed					Location of work						Latlong	
Rule No.	Item of work	Quantity	Rate	Amount (Rs. in Lakhs	Circle	Division	Range	Round	Beat	Compartment No	Lattitude	Longitude
1	2	3	4	5	6	7	8	9	10	11	12	13
	Boundry Pillar Class I I	70	0.04	2.80	Kolhapur	Sangli	Sangli	K.Mankahal	Kuktoli	240	N 17 04 13.70	E 74 56 59.71
		60	0.04	2.40	Kolhapur	Sangli	Sangli	K.Mankahal	Kuktoli	241	N 17 04 13.55	E 74 56 59.71
		30	0.04	1.20	Kolhapur	Sangli	Sangli	K.Mankahal	Kuktoli	229	N 17 03 15.29	E 74 55 20.46
		40	0.04	1.60	Kolhapur	Sangli	Sangli	K.Mankahal	Kuktoli	232	N 16 58 19.81	E 74 55 29.91
		20	0.04	0.80	Kolhapur	Sangli	Jath	Jath	Jath	267	N 17'06'50	E 75'08'46
		20	0.04	0.80	Kolhapur	Sangli	Jath	Jath	Jath	260	N 17'01'55	E 75'13'50
		10	0.04	0.40	Kolhapur	Sangli	Jath	Jath	Jath	266	N 17'01'55	E 75'13'50
		20	0.04	0.80	Kolhapur	Sangli	Jath	Jath	Dafalapur	271	N 17'01'55	E 75'13'50
		25	0.04	1.00	Kolhapur	Sangli	Jath	Jath	Dafalapur	270	N 16'59'38"	E 75'08'19
		19	0.04	0.76	Kolhapur	Sangli	Jath	Jath	Hivare	236	N 17'6'43	E 75'2'43
		23	0.04	0.92	Kolhapur	Sangli	Jath	Jath	Hivare	238	N 17'6'43	E 75'2'9
		30	0.04	1.20	Kolhapur	Sangli	Jath	Jath	Hivare	237	N 17'6'10	E 75'2'9
		25	0.04	1.00	Kolhapur	Sangli	Jath	Jath	Hivare	335	N 17'6'43	E 75'2'9
		40	0.04	1.60	Kolhapur	Sangli	Jath	Vhaspeth	Sordi	276	N 17'04'55"	E 75'22'25
		40	0.04	1.60	Kolhapur	Sangli	Jath	Vhaspeth	Vhaspeth	288	N 17'6'54	E 75'09'12
		65	0.04	2.60	Kolhapur	Sangli	Jath	Shegaon	Walekhindi	255	N 17'09'19	E 75'11'48
		35	0.04	1.40	Kolhapur	Sangli	Jath	Shegaon	Walekhindi	253	N 17'13'42	E 75'10'00
		20	0.04	0.80	Kolhapur	Sangli	Jath	Muchandi	Muchandi	278	N 17'53'55	E 75'42'15
		20	0.04	0.80	Kolhapur	Sangli	Jath	Muchandi	Asangi Turk	298	N 16'99'28	E 75'51'95
		3	0.04	0.12	Kolhapur	Sangli	Jath	Muchandi	Asangi Turk	299	N 16'9931	E 75'51'95
		15	0.04	0.60	Kolhapur	Sangli	Jath	Muchandi	Asangi Turk	300	N 16'95'55	E 75'51'75
		16	0.04	0.64	Kolhapur	Sangli	Jath	Muchandi	Asangi Turk	301	N 16'89'28	E 75'5145
	Total	**646**	**2**	**25.84**								

Works proposed					Location of work						Latlong	
Rule No.	Item of work	Quantity	Rate	Amount (Rs. in Lakhs	Circle	Division	Range	Round	Beat	Compartment No	Lattitude	Longitude
1	2	3	4	5	6	7	8	9	10	11	12	13
	Construction of Protection Huts	1	20.00	20.00	Kolhapur	Kolhapur	Chandgad	Chandgad	Sulaye	30	N 17°.21'43.04"	E 74°11'3002"
		1	20.00	20.00	Kolhapur	Kolhapur	Malkapur	Shittur	Palsavde	989	N 15°52'17.69"	E 74°64'88"
		1	20.00	20.00	Kolhapur	Kolhapur	Gargoti	Gargoti	Nitavde	323 A	N 16°142'8.96"	E 74°342.27"
		1	20.00	20.00	Kolhapur	Kolhapur	Aajara	South Aajara	Aawandi		N 16°018'911"	E 74°095'11.7"
		1	20.00	20.00	Kolhapur	Kolhapur	Kadgaon	Kadgaon	Kadgaon	340	N 16°123844"	E 74°32'026"
		1	20.00	20.00	Kolhpur	Satara	Patan	Dhoroshi	Dhoroshi	640	N-17-29.56.5	E-73-53.43.3
		1	20.00	20.00	Kolhpur	Satara	Patan	Pachgani	Pachgani	501	N-17-8.33.83	E73.47.07.00
		2	20.00	40.00	Kolhapur	sangli	sangli	Bhose	Bhose	159	N 16 52 23.26	E 74 37 29.92
	Total Protecation Huts	**9**		**180**								
	Forest Custedy	1	23.00	23.00	Kolhapur	sangli	sangli	Bhose	Bhose	159	N 16 52 25.64	E 74 37 37.35
	Labour Shed	2	6	12.00	Kolhapur	Sangli	Sangli	Bhose	Bhose	159	N 16 52 21.90	E 74 37 35.00
		1	6.00	6.00	Kolhapur	Sangli	Jath	Jath	Jath	267	N 17'06'50	E 75'08'46
		1	6.00	6.00	Kolhapur	Sangli	Jath	Jath	Dafalapur	234	N 16'59'39"	E 75'08'23
		2	6.00	12.00	Kolhapur	Sangli	shirala	Bilashi	Biur	53	N $17^0$13'48.3"	E $74^0$32'07.5"
		2	6.00	12.00	Kolhapur	Sangli	Khanapur-Vita	Vita	Vita (Khambhale	143	N 17'14'50.46	E 074'17'17.57
		1	6.00	6.00	Kolhapur	Sangli	Kadegaov-Palus	Kadegaon,	Kadegaon	118	N 17'13'35.92	E 74'43'04.42
		1	6.00	6.00	Kolhapur	Sangli	Kadegaov-Palus	Palus	Palus	93	17'13'35.92	74'43'04.42
		2	6.00	12.00	Kolhapur	Sangli	Atpadi	Atpadi	Atpadi	200	17.2547	74.5544
		2	6.00	12.00	Kolhapur	Sangli	Atpadi	kharsundi	jambhulani	203	17.2429	74.453
	Total Labour Shed	**14**	**54**	**84.00**								
	Total	**24**		**287.00**								
	Improving Mobility of frontline staff by providing Vehicles for forest protection & patrolling	LS	2.00	2.00	Kolhapur	Kolhapur	-	-	-	-		
		LS	2.00	2.00	Kolhapur	Satara	-	-	-	-		
		LS	2.00	2.00	Kolhapur	Sawantwadi	-	-	-	-		
		LS	2.00	2.00	Kolhapur	Sangli	-	-	-	-		
		LS	2.00	2.00	Kolhapur	Chiplun	-	-	-	-		
	Total	**0.00**		**10.00**								
	Grand Total 5 (2) (d)	**19710.43**		**391.35**								

Works proposed					Location of work						Latlong	
Rule No.	Item of work	Quantity	Rate	Amount (Rs. in Lakhs	Circle	Division	Range	Round	Beat	Compartment No	Lattitude	Longitude
1	2	3	4	5	6	7	8	9	10	11	12	13
5(2)(f) Forest fire prevention and control operations												
i	Cutting and burning of fire lines 6 Mtrs	13	0.018	0.23	Kolhapur	Kolhapur	Panhala	Panhala	Rakshi	823B	74.128731	16.798764
		10	0.018	0.18	Kolhapur	Kolhapur	Panhala	Panhala	Porle Tarf Than	824 A B	74.129011	16.759258
		4	0.018	0.07	Kolhapur	Kolhapur	Panhala	Panhala	Pimpale Tarf Sa	823 A	74.152525	16.816947
		6	0.018	0.11	Kolhapur	Kolhapur	Panhala	Panhala	Male	693 v	74.185858	16.80505
		5	0.018	0.09	Kolhapur	Kolhapur	Panhala	Panhala	Kushire	689 C	74.191469	16.775364
		10	0.018	0.18	Kolhapur	Kolhapur	Panhala	Kotoli	Kotoli	837 A	74.060661	16.797922
		15	0.018	0.27	Kolhapur	Kolhapur	Panhala	Kotoli	Vaghave	825B 826	74.108691	16.787261
		9	0.018	0.16	Kolhapur	Kolhapur	Panhala	Kotoli	Goliwade	827 A	74.075925	16.790908
		8	0.018	0.14	Kolhapur	Kolhapur	Panhala	Kotoli	Utre	825 A	74.121156	16.805611
		10	0.018	0.18	Kolhapur	Kolhapur	Panhala	Kotoli	Kaneri	840 A	74.026206	16.805611
		7	0.018	0.13	Kolhapur	Kolhapur	Panhala	Kotoli	Bandiwade	838 B	74.006453	16.81515
		10	0.018	0.18	Kolhapur	Kolhapur	Chandgad	Kanur kh	Kurani Buzwad	137, 138	74.8265	16.1312
		12	0.018	0.22	Kolhapur	Kolhapur	Chandgad	Mirvel	Mirvel	53B 54, 55	74.25087	15.483287
		20	0.018	0.36	Kolhapur	Kolhapur	Chandgad	Mirvel	Vaghotre	29B, 39B	74.75102	15.512618
		18	0.018	0.32	Kolhapur	Kolhapur	Chandgad	Mirvel	Isapur	31B, 33B, 34	74.44897	15.513418
		7	0.018	0.13	Kolhapur	Kolhapur	Chandgad	Chandgad	Suliye	131 C, 132	74.123868	15.54438
		25	0.018	0.45	Kolhapur	Kolhapur	Chandgad	Chandgad	Chandgad	3, 4, 5, 7A	74.82605	15.552197
		5	0.018	0.09	Kolhapur	Kolhapur	Chandgad	Chandgad	Umgaon	7B	74.822775	15.552301
		14	0.018	0.25	Kolhapur	Kolhapur	Chandgad	Chandgad	Umgaon	12, 13, 24B, 25, 26A	74.81877	15.522338
		20	0.018	0.36	Kolhapur	Kolhapur	Chandgad	Chandgad	Jambare	14, 16, 21B	74.54423	15.53029
		13	0.018	0.23	Kolhapur	Kolhapur	Chandgad	Kanur kh	Bhogoli	1, 2, 6,8, 9, 10	74.1222452	15.541521
		15	0.018	0.27	Kolhapur	Kolhapur	Chandgad	Kanur Kh	Pilani	10B, 11, 14, 15 To 21	74.61743	15.551869
		7	0.018	0.13	Kolhapur	Kolhapur	Gaganbawada	Nivade	Nivade	808 B	73.959819	16.682658
		6	0.018	0.11	Kolhapur	Kolhapur	Gaganbawada	Nivade	Nivade	806, 807	73.929572	16.667789
		5	0.018	0.09	Kolhapur	Kolhapur	Gaganbawada	Nivade	Salwan	810 B	73.975083	16.673961
		6	0.018	0.11	Kolhapur	Kolhapur	Gaganbawada	Nivade	Nivade	809 A	73.972839	16.696239
		5	0.018	0.09	Kolhapur	Kolhapur	Gaganbawada	Nivade	Salwan	810 A	73.969192	16.668069
		8	0.018	0.14	Kolhapur	Kolhapur	Gaganbawada	Nivade	Taliye	803, 804, 805	73.907575	16.658697

Works proposed					Location of work						Latlong	
Rule No.	Item of work	Quantity	Rate	Amount (Rs. in Lakhs	Circle	Division	Range	Round	Beat	Compartment No	Lattitude	Longitude
1	2	3	4	5	6	7	8	9	10	11	12	13
i	Cutting and burning of fire lines 6 Mtrs	7	0.018	0.13	Kolhapur	Kolhapur	Gaganbawada	Nivade	Kode	792 To 802	73.884175	16.659539
		6	0.018	0.11	Kolhapur	Kolhapur	Gaganbawada	G.bawada	Narveli	762, 763	73.859819	16.525925
		7	0.018	0.13	Kolhapur	Kolhapur	Gaganbawada	G.bawada	Narveli	755, 756	73.872839	16.510661
		5	0.018	0.09	Kolhapur	Kolhapur	Gaganbawada	G.bawada	Dhundwade	667 A, 667 B, 668	73.949886	16.919753
		3	0.018	0.05	Kolhapur	Kolhapur	Gaganbawada	G.bawada	Dhundwade	772, 773 A, B	73.917508	16.537261
		4	0.018	0.07	Kolhapur	Kolhapur	Gaganbawada	G.bawada	Asalaj	789 A, 790	73.905611	16.608417
		8	0.018	0.14	Kolhapur	Kolhapur	Malkapur	Warul	Gholaswade	1038B, 1039B	73.832097	16.943994
		4	0.018	0.07	Kolhapur	Kolhapur	Malkapur	Malkapur	Kotoli	1013	73.977879	16.971436
		5	0.018	0.09	Kolhapur	Kolhapur	Malkapur	Malkapur	Man	1046, 1047A	73.870033	16.893153
		4	0.018	0.07	Kolhapur	Kolhapur	Malkapur	Malkapur	Panundre	1048, 1049	73.874803	16.875364
		15	0.018	0.27	Kolhapur	Kolhapur	Malkapur	Malkapur	Karanjoshi	1064 A,9, 10	73.976206	16.891756
		20	0.018	0.36	Kolhapur	Kolhapur	Malkapur	Malkapur	Malkapur	1067 A	73.913186	16.912906
		15	0.018	0.27	Kolhapur	Kolhapur	Malkapur	Bambwade	Bambwade	828 C	74.080414	16.87845
		5	0.018	0.09	Kolhapur	Kolhapur	Malkapur	Bambwade	Bambwade	834	73.978169	16.850561
		5	0.018	0.09	Kolhapur	Kolhapur	Malkapur	Bambwade	Bambwade	831 A	74.051683	16.845678
		4	0.018	0.07	Kolhapur	Kolhapur	Malkapur	Bambwade	Bhedasgaon	1073 B	73.997261	16.932378
		5	0.018	0.09	Kolhapur	Kolhapur	Malkapur	Bambwade	Bambwade	830 B	74.078169	16.882378
		4	0.018	0.07	Kolhapur	Kolhapur	Malkapur	Bambwade	Bambwade	833 A	73.987542	16.838383
		5	0.018	0.09	Kolhapur	Kolhapur	Malkapur	Bambwade	Bhedasgaon	1074, 1075A	73.999886	16.972278
		4	0.018	0.07	Kolhapur	Kolhapur	Malkapur	Bambwade	Bambwade	829	74.066947	16.872839
		5	0.018	0.09	Kolhapur	Kolhapur	Karveer	Narande	Narande	701	74.223747	16.48024
		6	0.018	0.11	Kolhapur	Kolhapur	Karveer	Narande	Narande	700	74.370038	16.758417
		7	0.018	0.13	Kolhapur	Kolhapur	Karveer	Narande	Narande	699	74.211007	16.464894
		5	0.018	0.09	Kolhapur	Kolhapur	Karveer	Narande	Narande	698A	74.185441	16.741028
		8	0.018	0.14	Kolhapur	Kolhapur	Karveer	Narande	Narande	698B	74.183661	16.472195
		4	0.018	0.07	Kolhapur	Kolhapur	Karveer	Narande	Manpadale	694A	74.222278	16.844275
		6	0.018	0.11	Kolhapur	Kolhapur	Karveer	Narande	Manpadale	695B	74.217508	16.801683
		6	0.018	0.11	Kolhapur	Kolhapur	Karveer	Narande	Manpadale	697	74.246519	16.815711
		5	0.018	0.09	Kolhapur	Kolhapur	Radhanagari	Sarwade	Farale	422 B	73.992031	16.456733

Works proposed					Location of work						Latlong	
Rule No.	Item of work	Quantity	Rate	Amount (Rs. in Lakhs	Circle	Division	Range	Round	Beat	Compartment No	Lattitude	Longitude
1	2	3	4	5	6	7	8	9	10	11	12	13
i	Cutting and burning of fire lines 6 Mtrs	5	0.018	0.09	Kolhapur	Kolhapur	Radhanagari	Sarwade	Farale	421	74.014869	16.470594
		6	0.018	0.11	Kolhapur	Kolhapur	Radhanagari	Sarwade	Farale	512	74.048203	16.434456
		5	0.018	0.09	Kolhapur	Kolhapur	Radhanagari	Sarwade	Farale	508, 509	73.999606	16.365992
		20	0.018	0.36	Kolhapur	Kolhapur	Radhanagari	Sarwade	Sarwade	95, 98, 513	74.01835	16.399325
		4	0.018	0.07	Kolhapur	Kolhapur	Radhanagari	Sarwade	Sarwade	511	74.081817	16.366667
		5	0.018	0.09	Kolhapur	Kolhapur	Radhanagari	Sarwade	Sarwade	674 A	74.092311	16.4601
		3	0.018	0.05	Kolhapur	Kolhapur	Radhanagari	Sarwade	Sarwade	674 B	74.0968	16.463747
		6	0.018	0.11	Kolhapur	Kolhapur	Radhanagari	Sarwade	Sarwade	675 A	74.171436	16.460661
		7	0.018	0.13	Kolhapur	Kolhapur	Radhanagari	Sarwade	Kandalgaon	743, 744	73.950842	16.491469
		14	0.018	0.25	Kolhapur	Kolhapur	Radhanagari	Mhasurli	Keloshi	659 To 662	73.967508	16.537542
		6	0.018	0.11	Kolhapur	Kolhapur	Radhanagari	Mhasurli	Keloshi	663, 664	73.994275	16.508697
		9	0.018	0.16	Kolhapur	Kolhapur	Radhanagari	Mhasurli	Keloshi	665, 666	73.965431	16.505331
		14	0.018	0.25	Kolhapur	Kolhapur	Radhanagari	Mhasurli	Rashiwade	669 A	74.073119	16.553647
		4	0.018	0.07	Kolhapur	Kolhapur	Radhanagari	Mhasurli	Rashiwade	669 B	74.077608	16.546519
		5	0.018	0.09	Kolhapur	Kolhapur	Radhanagari	Mhasurli	Rashiwade	670 A	74.052525	16.517228
		5	0.018	0.09	Kolhapur	Kolhapur	Radhanagari	Mhasurli	Mhasurli	671 A	74.033219	16.501403
		6	0.018	0.11	Kolhapur	Kolhapur	Radhanagari	Mhasurli	Mhasurli	671 B	74.0167	16.490908
		5	0.018	0.09	Kolhapur	Kolhapur	Radhanagari	Mhasurli	Rashiwade	672 B	74.016947	16.490908
		8	0.018	0.14	Kolhapur	Kolhapur	Radhanagari	Mhasurli	Rashiwade	673 B	74.053086	16.489786
		12	0.018	0.22	Kolhapur	Kolhapur	Gargoti	Gargoti	Gargoti	293	74.157575	16.271717
		12	0.018	0.22	Kolhapur	Kolhapur	Gargoti	Gargoti	Vengrul	297	74.105331	16.223681
		8	0.018	0.14	Kolhapur	Kolhapur	Gargoti	Gargoti	Shengaon	285, 286	74.096239	16.269192
		8	0.018	0.14	Kolhapur	Kolhapur	Gargoti	Gargoti	Nitwade	330	74.084736	16.2468
		7	0.018	0.13	Kolhapur	Kolhapur	Gargoti	Kur	Kur	320	74.149606	16.419472
		5	0.018	0.09	Kolhapur	Kolhapur	Gargoti	Kur	Minache Bk	323	74.080694	16.328731
		6	0.018	0.11	Kolhapur	Kolhapur	Gargoti	Kur	Ambawane	319	74.186981	16.337822
		6	0.018	0.11	Kolhapur	Kolhapur	Gargoti	Pimpalgaon	Begwade	306 To 309	74.144275	16.189786
		6	0.018	0.11	Kolhapur	Kolhapur	Gargoti	Pimpalgaon	Pimpalgaon	316	74.205331	16.257294
		5	0.018	0.09	Kolhapur	Kolhapur	Kadgaon	Kadgaon	Kadgaon	335	74.085297	16.179572

Works proposed					Location of work						Latlong	
Rule No.	Item of work	Quantity	Rate	Amount (Rs. in Lakhs	Circle	Division	Range	Round	Beat	Compartment No	Lattitude	Longitude
1	2	3	4	5	6	7	8	9	10	11	12	13
i	Cutting and burning of fire lines 6 Mtrs	4	0.018	0.07	Kolhapur	Kolhapur	Kadgaon	Kadgaon	Vesarde	335, 336	74.411624	16.91852
		5	0.018	0.09	Kolhapur	Kolhapur	Kadgaon	Kadgaon	Mhasrang	328	74.31774	16.11768
		3	0.018	0.05	Kolhapur	Kolhapur	Kadgaon	Tambale	Vesarde	336 B	74.41624	16.91852
		4	0.018	0.07	Kolhapur	Kolhapur	Kadgaon	Tambale	Shivdav Bk	372 To 378	73.573239	16.121267
		4	0.018	0.07	Kolhapur	Kolhapur	Kadgaon	Tambale	Shivdav Kh	382	73.56592	16.9852
		4	0.018	0.07	Kolhapur	Kolhapur	Kadgaon	Tambale	Tambale	368 To 371	73.595776	16.10716
		6	0.018	0.11	Kolhapur	Kolhapur	Kadgaon	Tambale	Mani	384	73.581608	16.711627
		5	0.018	0.09	Kolhapur	Kolhapur	Kadgaon	Tambale	Tambale	365 To 367	73.595776	16.102304
		3	0.018	0.05	Kolhapur	Kolhapur	Kadgaon	Tambale	Kondoshi	455	73.571605	16.56685
		3	0.018	0.05	Kolhapur	Kolhapur	Kadgaon	Tambale	Kondoshi	367	73.595745	16.10805
		4	0.018	0.07	Kolhapur	Kolhapur	Kadgaon	Patgaon	Patgaon	393, 394	73.564803	16.82497
		4	0.018	0.07	Kolhapur	Kolhapur	Kadgaon	Patgaon	Patgaon	390, 391, 392	73.555378	16.75707
		5	0.018	0.09	Kolhapur	Kolhapur	Kadgaon	Patgaon	Tambyachiwadi	395 To 398	73.542469	16.65659
		6	0.018	0.11	Kolhapur	Kolhapur	Kadgaon	Patgaon	Hanmante	412, 414	73.561605	16.55684
		5	0.018	0.09	Kolhapur	Kolhapur	Kadgaon	Patgaon	Hanmante	408, 410	73.503143	16.52491
		11	0.018	0.20	Kolhapur	Kolhapur	Pendakhale	Y.Jugai	Shembawane	1102	73.45107	16.465015
		30	0.018	0.54	Kolhapur	Kolhapur	Pendakhale	Y.Jugai	Shembawane	1098, 1099, 1100	73.485034	16.482945
		10	0.018	0.18	Kolhapur	Kolhapur	Pendakhale	Y.Jugai	Gelwade	1095 1096	73.54019	16.504725
		5	0.018	0.09	Kolhapur	Kolhapur	Pendakhale	Sawardi	Sawardi	888, 889, 890	73.463429	16.454193
		17	0.018	0.31	Kolhapur	Kolhapur	Pendakhale	Y.Jugai	Shembawane	1093, 1094	73.462418	16.505632
		8	0.018	0.14	Kolhapur	Kolhapur	Pendakhale	Y.Jugai	Gelwade	1091, 1092	73.471782	16.513663
		9	0.018	0.16	Kolhapur	Kolhapur	Pendakhale	Sawardi	Anuskura	868 To 870	73.493845	16.4617
		10	0.018	0.18	Kolhapur	Kolhapur	Pendakhale	Y.Jugai	Gelwade	1096, 1097	73.493845	16.49562
		11	0.018	0.20	Kolhapur	Kolhapur	Pendakhale	Y.Jugai	Vishalgad	1082	73.741189	16.900281
		10	0.018	0.18	Kolhapur	Kolhapur	Pendakhale	Y.Jugai	Y.Jugai	1,08,51,090	73.822558	16.903928
		8	0.018	0.14	Kolhapur	Kolhapur	Pendakhale	Pendakhale	Pendakhale	856 B To 858	73.932658	16.782658
		5	0.018	0.09	Kolhapur	Kolhapur	Pendakhale	Pendakhale	Nandgaon	855A,B	73.979853	16.805892
		6	0.018	0.11	Kolhapur	Kolhapur	Pendakhale	Pendakhale	Sonurle	846 To 854	73.932658	16.782658
		8	0.018	0.14	Kolhapur	Kolhapur	Pendakhale	Sawardi	Burmbal	859, 860, 871	73.887261	16.834175

Works proposed					Location of work						Latlong	
Rule No.	Item of work	Quantity	Rate	Amount (Rs. in Lakhs	Circle	Division	Range	Round	Beat	Compartment No	Lattitude	Longitude
1	2	3	4	5	6	7	8	9	10	11	12	13
i	Cutting and burning of fire lines 6 Mtrs	5	0.018	0.09	Kolhapur	Kolhapur	Pendakhale	Sawardi	Kante	861 To 863	73.858697	16.805611
		10	0.018	0.18	Kolhapur	Kolhapur	Pendakhale	Sawardi	Marale	881	73.875925	16.764869
		8	0.018	0.14	Kolhapur	Kolhapur	Patane	Kalasgade	Kodali	68, 69, 71	74.105658	15.475452
		9	0.018	0.16	Kolhapur	Kolhapur	Patane	Kalasgade	Gulamb	80P, 73, 77	74.134374	15.484795
		6	0.018	0.11	Kolhapur	Kolhapur	Patane	Patane	Kaliwade	85 To 88	74.151186	15.514681
		40	0.018	0.72	Kolhapur	Kolhapur	Patane	Patane	Patane	80, 81 To 86	74.142792	15.502587
		6	0.018	0.11	Kolhapur	Kolhapur	Patane	Karve	Madwale	93, 94	74.184818	15.502542
		6	0.018	0.11	Kolhapur	Kolhapur	Patane	Tudiye	Tudiye	111	74.203883	15.465473
		4	0.018	0.07	Kolhapur	Kolhapur	Patane	Tudiye	Mhalunge	113 To 116	74.174453	15.464579
		6	0.018	0.11	Kolhapur	Kolhapur	Patane	Tudiye	Kolik	120 To 122	74.1446	15.462341
		7	0.018	0.13	Kolhapur	Kolhapur	Patane	Tudiye	Hajgoli	96 To 99	74.182622	15.50259
		6	0.018	0.11	Kolhapur	Kolhapur	Patane	Karve	Chinchane	271, 274	74.243877	16.22682
		6	0.018	0.11	Kolhapur	Kolhapur	Patane	Karve	Karve	123, 135	74.222953	15.54759
		10	0.018	0.18	Kolhapur	Kolhapur	Ajara	North Ajara	Ajara	151A	74.205892	16.130694
		8	0.018	0.14	Kolhapur	Kolhapur	Ajara	North Ajara	Salgaon	161A	74.180133	16.158136
		5	0.018	0.09	Kolhapur	Kolhapur	Ajara	North Ajara	Madilage	154	74.176486	16.175364
		6	0.018	0.11	Kolhapur	Kolhapur	Ajara	South Ajara	Maligre	257	74.254769	16.113186
		4	0.018	0.07	Kolhapur	Kolhapur	Ajara	South Ajara	Chafwade	246	74.244556	16.065711
		5	0.018	0.09	Kolhapur	Kolhapur	Ajara	South Ajara	Shirsangi	250	74.297081	16.063186
		5	0.018	0.09	Kolhapur	Kolhapur	Ajara	South Ajara	Awandhi	221	74.137261	16.072278
		6	0.018	0.11	Kolhapur	Kolhapur	Ajara	South Ajara	Polgaon	244	74.206172	16.065150
		7	0.018	0.13	Kolhapur	Kolhapur	Ajara	South Ajara	Latgaon	234	74.144275	16.044275
		4	0.018	0.07	Kolhapur	Kolhapur	Ajara	South Ajara	Ite	218	74.152244	16.079011
		5	0.018	0.09	Kolhapur	Kolhapur	Ajara	Dhangarmola	Gavase	206	74.116272	16.084175
		4	0.018	0.07	Kolhapur	Kolhapur	Ajara	Dhangarmola	Haloli	213	74.148203	16.096800
		7	0.018	0.13	Kolhapur	Kolhapur	Ajara	Dhangarmola	Suleran	193	74.116667	16.060381
		8	0.018	0.14	Kolhapur	Kolhapur	Ajara	Dhangarmola	Dhangarmola	179	74.044836	16.063467
		5	0.018	0.09	Kolhapur	Kolhapur	Ajara	Dhangarmola	Parpoli	170	74.066553	16.099044
	Total	**1113**		**20.03**								

Works proposed					Location of work						Latlong	
Rule No.	Item of work	Quantity	Rate	Amount (Rs. in Lakhs	Circle	Division	Range	Round	Beat	Compartment No	Lattitude	Longitude
1	2	3	4	5	6	7	8	9	10	11	12	13
i	Cutting and burning of fire lines	5	0.03	0.15	Kolhapur	Sangli	Sangli	K.Mankahal	Kuktoli	172	N 16 54 04.49	E 74 49 35.21
		2	0.03	0.06	Kolhapur	Sangli	Sangli	K.Mankahal	Kuktoli	233	N 16 58 36.57	E 74 58 34.87
		2	0.03	0.06	Kolhapur	Sangli	Sangli	K.Mankahal	Kuktoli	171	N 16 58 36.57	E 74 51 51.02
		2	0.03	0.06	Kolhapur	Sangli	Sangli	K.Mankahal	Kuktoli	230	N 17 03 31.54	E 74 54 47.33
		10	0.03	0.30	Kolhapur	Sangli	Sangli	Dandoba	Haroli	175	N 17 09 00.95	E 74 53 04.71
		5	0.03	0.15	Kolhapur	Sangli	Sangli	Dandoba	Haroli	225	N 17 09 00.95	E 74 53 04.71
		5	0.03	0.15	Kolhapur	Sangli	Sangli	Dandoba	Haroli	227	N 17 09 00.95	E 74 53 04.71
		5	0.03	0.15	Kolhapur	Sangli	Sangli	Dandoba	Haroli	174	N 17 09 00.95	E 74 53 04.71
		4	0.03	0.12	Kolhapur	Sangli	Sangli	Dandoba	Gundewadi	163	N 16 54 46.69	E 74 44 51.17
		3	0.03	0.09	Kolhapur	Sangli	Sangli	Dandoba	Gundewadi	162	N 16 54 52.15	E 74 44 07.79
		10	0.03	0.30	Kolhapur	Sangli	Sangli	Bhose	Bhose	159	N 16 52 21.90	E 74 37 35.00
		5	0.03	0.15	Kolhapur	Sangli	Jath	Jath	Jath	267	N 17'06'50	E 75'08'46
		2	0.03	0.06	Kolhapur	Sangli	Jath	Jath	Jath	262	N 17'01'55	E 75'13'50
		4	0.03	0.12	Kolhapur	Sangli	Jath	Jath	Jath	261	N 17'06'50	E 75'08'46
		4	0.03	0.12	Kolhapur	Sangli	Jath	Jath	Jath	268	N 17'01'55	E 75'13'50
		3	0.03	0.09	Kolhapur	Sangli	Jath	Jath	Jath	269	N 17'06'50	E 75'08'46
		2	0.03	0.06	Kolhapur	Sangli	Jath	Jath	Jath	260	N 17'01'55	E 75'13'50
		1.5	0.03	0.05	Kolhapur	Sangli	Jath	Jath	Dafalapur	271	N 16'59'36"	E 75'08'12
		2.5	0.03	0.08	Kolhapur	Sangli	Jath	Jath	Dafalapur	270	N 16'59'38"	E 75'08'19
		9	0.03	0.27	Kolhapur	Sangli	Jath	Jath	Hivare	243	N 17'6'65	E 75'2'73
		2	0.03	0.06	Kolhapur	Sangli	Jath	Jath	Hivare	238	N 17'6'43	E 75'2'43
		2.5	0.03	0.08	Kolhapur	Sangli	Jath	Jath	Hivare	237	N 17'6'65	E 75'2'73
		4	0.03	0.12	Kolhapur	Sangli	Jath	Vhaspeth	Sordi	281	N 17'04'46	E 75'22'25
		3	0.03	0.09	Kolhapur	Sangli	Jath	Vhaspeth	Sordi	282	N 17'04'46	E 75'22'25
		5	0.03	0.15	Kolhapur	Sangli	Jath	Vhaspeth	Sordi	276	N 17'04'55"	E 75'22'25
		3	0.03	0.09	Kolhapur	Sangli	Jath	Vhaspeth	Sordi	283	N 17'04'45"	E 75'66'25
		2	0.03	0.06	Kolhapur	Sangli	Jath	Vhaspeth	Ankalgi	296	N 16.01.22.26	E 74.39.32.40
		7	0.03	0.21	Kolhapur	Sangli	Jath	Vhaspeth	Ankalgi	303	N 16.01.16.89	E 74.40.32.10
		3	0.03	0.09	Kolhapur	Sangli	Jath	Vhaspeth	Ankalgi	295	N 16.01.22.26	E 74.39.32.40
		5	0.03	0.15	Kolhapur	Sangli	Jath	Vhaspeth	Vhaspeth	288	N 17'6'47	E 75'09'06
		4	0.03	0.12	Kolhapur	Sangli	Jath	Vhaspeth	Vhaspeth	284	N 17'6'49	E 75'09'89
		2	0.03	0.06	Kolhapur	Sangli	Jath	Vhaspeth	Vhaspeth	290	N 17'6'37	E 75'09'56
		5	0.03	0.15	Kolhapur	Sangli	Jath	Shegaon	Avandhi	254	N 17'7'78	E 75'09'87

Works proposed					Location of work						Latlong	
Rule No.	Item of work	Quantity	Rate	Amount (Rs. in Lakhs	Circle	Division	Range	Round	Beat	Compartment No	Lattitude	Longitude
1	2	3	4	5	6	7	8	9	10	11	12	13
i	Cutting and burning of fire lines	3	0.03	0.09	Kolhapur	Sangli	Jath	Shegaon	Avandhi	258	N 17'7'63	E 75'09'86
		3	0.03	0.09	Kolhapur	Sangli	Jath	Shegaon	Avandhi	287	N 17'7'63	E 75'09'87
		3	0.03	0.09	Kolhapur	Sangli	Jath	Shegaon	Avandhi	286	N 17'7'47	E 75'09'45
		2	0.03	0.06	Kolhapur	Sangli	Jath	Shegaon	Avandhi	252	N 17'7'85	E 75'09'74
		2	0.03	0.06	Kolhapur	Sangli	Jath	Shegaon	Walekhindi	248	N 17'45'63	E 75'02'38
		2	0.03	0.06	Kolhapur	Sangli	Jath	Shegaon	Walekhindi	254	N 17'45'63	E 75'02'38
		8	0.03	0.24	Kolhapur	Sangli	Jath	Shegaon	Walekhindi	246	N 17'45'63	E 75'02'38
		3	0.03	0.09	Kolhapur	Sangli	Jath	Shegaon	Walekhindi	247	N 17'45'63	E 75'02'38
		10	0.03	0.30	Kolhapur	Sangli	Jath	Muchandi	Muchandi	275	N 17'65'80	E 75'48'99
		2	0.03	0.06	Kolhapur	Sangli	Jath	Muchandi	Asangi Turk	298	N 16'99'28	E 75'51'95
		3	0.03	0.10	Kolhapur	Sangli	Jath	Muchandi	Asangi Turk	299	N 16'99'96	E 75'51'68
		2	0.03	0.10	Kolhapur	Sangli	Jath	Muchandi	Asangi Turk	301	N 16'95'44	E 75'51'44
		100	0.03	3.00	Kolhapur	Sangli	Khanapur-Vita	Khanapur-	Khanpur		$17^0$13'04.6"	$74^0$44'41.8"
					Kolhapur	Sangli	Khanapur-Vita	Khanapur-	Balwadi		$17^0$32'03.65"	$74^0$74'36.83"
					Kolhapur	Sangli	Khanapur-Vita	Khanapur-	Palashi		$17^0$13'47.5"	$74^0$47'91.5"
					Kolhapur	Sangli	Khanapur-Vita	Vita	Vita		$17^0$14'45.4"	$74^0$36'47.2"
					Kolhapur	Sangli	Khanapur-Vita	Vita	Lengare		$17^0$21'36.7"	$74^0$40'22.9"
					Kolhapur	Sangli	Khanapur-Vita	Vita	Salshinge		$17^0$17'02.8"	$74^0$35'53.5"
		50	0.03	1.50	Kolhapur	Sangli	Khanapur-Vita	Kadegaon,	Kadegaon	1,15,118	17'16'13.40	074'19'26.40
					Kolhapur	Sangli	Khanapur-Vita	Kadegaon,	Sonsal	1,08,109	17'16'40.99	074'19'62.40
					Kolhapur	Sangli	Khanapur-Vita	Kadepur	Kadepur	1,23,106	17'16'30.80	074'19'85.90
					Kolhapur	Sangli	Khanapur-Vita	Kadepur	Wangi	107	17'16'33.55	074'19'39.70
		75	0.03	2.25	Kolhapur	Sangli	Atpadi	Atpadi	kargani	213, 216, 217,	17.2100	74.5526
					Kolhapur	Sangli	Atpadi	kharsundi	zare	207	17.243	74.41.14
					Kolhapur	Sangli	Atpadi	kharsundi	kharsundi	220	17.1837	74.4619
	Total	**402**	**1**	**12.10**								
ii	Fire Watchers	7500	0.004	30.00	Kolhapur	Kolhapur	Ajara, Kadgaon, G.bawada, Panhala, Pendakhale, Malkapur Chandgad & Patane	Conservation Reserves 1) Vishalgad Conservation Reserve 2) Panhalgad Conservation Reserve 3) Gaganbawada Conservation Reserve 4) Chatrapati Shahu Maharaj Conservation Reserve 5) Chandgad Conservation Reserve				
	Total		**0.004**	**30.00**								

Works proposed					Location of work						Latlong	
Rule No.	Item of work	Quantity	Rate	Amount (Rs. in Lakhs	Circle	Division	Range	Round	Beat	Compartment No	Lattitude	Longitude
1	2	3	4	5	6	7	8	9	10	11	12	13
ii	**Fire watchers**	1	0.1	0.40	Kolhapur	Sangli	Sangli	K.Mankahal	Kuktoli	172		
		1	0.1	0.40	Kolhapur	Sangli	Sangli	K.Mankahal	Kuktoli	172		
		1	0.1	0.40	Kolhapur	Sangli	Sangli	K.Mankahal	Kuktoli	172		
		1	0.1	0.40	Kolhapur	Sangli	Sangli	K.Mankahal	Kuktoli	172		
		1	0.1	0.40	Kolhapur	Sangli	Sangli	K.Mankahal	Kuktoli	172		
		4	0.1	1.60	Kolhapur	Sangli	Sangli	Dandoba	Haroli	175		
		2	0.1	0.80	Kolhapur	Sangli	Sangli	Dandoba	Haroli	175		
		2	0.1	0.80	Kolhapur	Sangli	Sangli	Dandoba	Haroli	175		
		2	0.1	0.80	Kolhapur	Sangli	Sangli	Dandoba	Gundewadi	163		
		2	0.1	0.80	Kolhapur	Sangli	Sangli	Dandoba	Gundewadi	163		
		5	0.1	2.00	Kolhapur	Sangli	Sangli	Bhose	Bhose	159		
		1	0.1	0.40	Kolhapur	Sangli	Sangli	Bhose	Bhose	158		
		1	0.1	0.40	Kolhapur	Sangli	Sangli	Bhose	Shipur	165		
		1	0.1	0.40	Kolhapur	Sangli	Sangli	Bhose	Shipur	166		
		1	0.1	0.40	Kolhapur	Sangli	Sangli	Bhose	Shipur	169		
		1	0.1	0.40	Kolhapur	Sangli	Sangli	Bhose	Shipur	168		
		1	0.1	0.40	Kolhapur	Sangli	Jath	Jath	Jath	267		
		1	0.1	0.40	Kolhapur	Sangli	Jath	Jath	Dafalapur	234		
		1	0.1	0.40	Kolhapur	Sangli	Jath	Jath	Hivare	243		
		1	0.1	0.40	Kolhapur	Sangli	Jath	Vhaspeth	Sordi	281		
		1	0.1	0.40	Kolhapur	Sangli	Jath	Vhaspeth	Ankalagi	292		
		1	0.1	0.40	Kolhapur	Sangli	Jath	Vhaspeth	Vhaspeth	288		
		1	0.1	0.40	Kolhapur	Sangli	Jath	Shegaon	Avandhi	258		
		1	0.1	0.40	Kolhapur	Sangli	Jath	Shegaon	Walekhindi	246		
		1	0.1	0.40	Kolhapur	Sangli	Jath	Muchandi	Muchandi	275		
		1	0.1	0.40	Kolhapur	Sangli	Jath	Muchandi	Asangi Turk	298		
		7	0.1	3.00	Kolhapur	Sangli	Khanapur-Vita	Khanapur-Vita	Khanpur,Balwadi,Palashi,Vita, Lengare,Salshinge			
		5	0.1	2.00	Kolhapur	Sangli	Kadegaov-Palus	Kadegaon, Kadepur	Kadegaon, Sonsal, Kadepur, Wangi	115,118,108,109, 123,106,107		
		7	0.1	3.00	Kolhapur	Sangli	Atpadi	Atpadi	Atpadi	200		
					Kolhapur	Sangli	Atpadi	Atpadi	kargani	216, 213		
					Kolhapur	Sangli	Atpadi	kharsundi	zare,	207, 208		
					Kolhapur	Sangli	Atpadi	kharsundi	kharsundi	197, 220		
	Total	**56**	**2.9**	**22.80**								
	Grand Total 5(2)(f)	**1571**		**84.93**								

Works proposed					Location of work						Latlong	
Rule No.	Item of work	Quantity	Rate	Amount (Rs. in Lakhs	Circle	Division	Range	Round	Beat	Compartment No	Lattitude	Longitude
1	2	3	4	5	6	7	8	9	10	11	12	13
5(2)(g)	**Soil and moisture conservation works in the forest**											
i	Gabian Structure	1	0.50	0.50	Kolhapur	Kolhapur	Karveer	Narande	Narande	701	N 16.797982	E 74.40251
		1	0.50	0.50	Kolhapur	Kolhapur	Karveer	Narande	Manpadale	694/A	N 16.848818	E 74.225895
		6	0.50	3.00	Kolhapur	Kolhapur	Panhala	Bajarbhogaon	Kale	943 A	N 16.738426	E 74.044573
		1	0.50	0.50	Kolhapur	Kolhapur	Pendakhale	Y Jugai	Pariwane	1099	N 16.835495	E 73.717906
		1	0.50	0.50	Kolhapur	Kolhapur	Pendakhale	Pendakhale	Sonurle	853	N 16.814873	E 73.932618
		1	0.50	0.50	Kolhapur	Kolhapur	Pendakhale	Y Jugai	Shembwane	1094 A	N 16.812983	E 73.788146
		2	0.50	1.00	Kolhapur	Kolhapur	Pendakhale	Y Jugai	Y Jugai	1095	N 16.849262	E 73.816898
		1	0.50	0.50	Kolhapur	Kolhapur	Malkapur	Shittur	Shirale Tarf ...	1104	N 17.097432	E 73.872309
		1	0.50	0.50	Kolhapur	Kolhapur	Malkapur	Shittur	Shirale Tarf ...	1105	N 17.100099	E 73.861343
		1	0.50	0.50	Kolhapur	Kolhapur	Malkapur	Shittur	Shirale Tarf ...	1108	N 17.077832	E 73.863614
		1	0.50	0.50	Kolhapur	Kolhapur	Malkapur	Warun	Amba	835	N 21.416918	E 75.167031
		1	0.50	0.50	Kolhapur	Kolhapur	Malkapur	Malkapur	Karanjoshi	1061	N 16.854438	E 73.959534
		1	0.50	0.50	Kolhapur	Kolhapur	Malkapur	Malkapur	Karanjoshi	1062	N 16.839709	E 73.952201
		1	0.50	0.50	Kolhapur	Kolhapur	Malkapur	Bambwade	Bambwade	831 B	N 16.825592	E 74.038332
	Total	**20**		**10.00**								
i	Construction of Gabions	2	0.50	1.00	Kolhpur	Satara	Patan	Bhosgaon	Bhosgaon	553	N-17.12.30.2	E-74.01.24.5
		2	0.50	1.00	Kolhpur	Satara	Patan	Bhosgaon	Kumbhargaon	543	N-17.15.38.0	E73.01.08.3
		2	0.50	1.00	Kolhpur	Satara	Patan	Bhosgaon	khale	542	N-17.17.20	E-73.53.54
		2	0.50	1.00	Kolhpur	Satara	Patan	Sanbur	Salve	536	N-17.17.36	E-73.54.01
		2	0.50	1.00	Kolhpur	Satara	Patan	Sanbur	Mahind	537	N-17.17.35	E-73.54.01
		2	0.50	1.00	Kolhpur	Satara	Patan	Sanbur	Bacholi	537	N-17.14.35	E-73.53.08
		2	0.50	1.00	Kolhpur	Satara	Patan	Sanbur	Sanbur	538	N-17.14.35	E-73.53.08
		1	0.50	0.50	Kolhpur	Satara	Patan	Patan	morgiri	504	N-17.17.08	E-74.02.14
		1	0.50	0.50	Kolhpur	Satara	Patan	M Peth	Bhahule	509	N-17.32.20.8	E-73.55.24.0
		1	0.50	0.50	Kolhpur	Satara	Patan	Dhoroshi	Dhoroshi	637/640/642	N17.19.26.00	E-73.44.45.00
		1	0.50	0.50	Kolhpur	Satara	Patan	Pachgani	govare	497	N-17.10.49	E-73.52.49
		1	0.50	0.50	Kolhpur	Satara	Phaltan	Phaltan	Dalwadi	815	N- 175343.44	E 742526.45
		1	0.50	0.50	Kolhpur	Satara	Phaltan	Phaltan	Giravi	814	N - 179441.49	E 746056.6
		1	0.50	0.50	Kolhpur	Satara	Phaltan	Phaltan	Nimblak	772	N 175418.31	E 741236.7
		1	0.50	0.50	Kolhpur	Satara	Phaltan	Aadrki	Aadrki	781	N 175333.39	E 742517.97
		1	0.50	0.50	Kolhpur	Satara	Wai	Washivlali	Vadavali	7 Part	N 17º59'26'59	E 073 43' 26.98
		1	0.50	0.50	Kolhpur	Satara	Wai	Washivlali	Vadavali	7 part	N 17º54'50'	E 073 59' 40
		1	0.50	0.50	Kolhpur	Satara	Wai	Bhuinj	Bhuinj	43	N 17º54'47'	E 073 59' 40

Works proposed					Location of work						Latlong	
Rule No.	Item of work	Quantity	Rate	Amount (Rs. in Lakhs	Circle	Division	Range	Round	Beat	Compartment No	Lattitude	Longitude
1	2	3	4	5	6	7	8	9	10	11	12	13
i	Construction of Gabions	1	0.50	0.50	Kolhpur	Satara	Wai	Bhuinj	Bhuinj	43	N 17º54'57	E 073 59' 34
		1	0.50	0.50	Kolhpur	Satara	Wai	Bhuinj	Bhuinj	43	N 17º54'30	E 073 59' 35
		1	0.50	0.50	Kolhpur	Satara	Wai	Bhuinj	Bhuinj	43	N 17º54'54	E 073 01' 16
		1	0.50	0.50	Kolhpur	Satara	Wai	Bhuinj	Bhuinj	157	N 17º53'54	E 074 00' 47
		1	0.50	0.50	Kolhpur	Satara	Wai	Bhuinj	Bhuinj	158	N 17º53'56	E 074 00' 47
		1	0.50	0.50	Kolhpur	Satara	Wai	Bhuinj	Bhuinj	158	N 17º53'53	E 074 00' 46
		1	0.50	0.50	Kolhpur	Satara	Wai	Bhuinj	Bhuinj	158	N 17º54 01	E 074 01' 44
		1	0.50	0.50	Kolhpur	Satara	Wai	Bhuinj	Bhuinj	160	N 17º53'47	E 074 01' 33
		1	0.50	0.50	Kolhpur	Satara	Wai	Bhuinj	Bhuinj	160	N 17º53'55	E 074 01' 43
		1	0.50	0.50	Kolhpur	Satara	Wai	Bhuinj	Bhuinj	160	N 17º52'08	E 074 00' 55
		1	0.50	0.50	Kolhpur	Satara	Wai	Bhuinj	Bhuinj	161 part	N 17º49'50	E 074 02' 11
		1	0.50	0.50	Kolhpur	Satara	Wai	Bhuinj	Belmachi	168 part	N 17º49'43	E 074 01' 53
		1	0.50	0.50	Kolhpur	Satara	Wai	Bhuinj	Belmachi	168 part	N 17º49'49	E 074 02' 17
		1	0.50	0.50	Kolhpur	Satara	Wai	Bhuinj	Belmachi	168 part	N 17º49'56	E 074 02' 25
		1	0.50	0.50	Kolhpur	Satara	Wai	Bhuinj	Belmachi	168 part	N 17º49'55	E 074 02' 26
		1	0.50	0.50	Kolhpur	Satara	Wai	Bhuinj	Belmachi	168 part	N 17º49'49	E 074 02' 16
		1	0.50	0.50	Kolhpur	Satara	Wai	Bhuinj	Belmachi	168 part	N 17º49'14	E 079 01' 39
		1	0.50	0.50	Kolhpur	Satara	Wai	Bhuinj	Belmachi	168 part	N 17 º50'16	E 074 01' 38
		1	0.50	0.50	Kolhpur	Satara	Wai	Bhuinj	Belmachi	168 part	N 17 º50'01	E 074 01' 30
		1	0.50	0.50	Kolhpur	Satara	Wai	Bhuinj	Belmachi	168 part	N 17 º50'00	E 074 01' 28
		1	0.50	0.50	Kolhpur	Satara	Wai	Bhuinj	Belmachi	168 part	N 18 º0.38.83	E 073 55' 51.92
		1	0.50	0.50	Kolhpur	Satara	Wai	Wai	Parkhandi	27 part	N 18 º0.39.68	E 073 55' 50.64
		1	0.50	0.50	Kolhpur	Satara	Wai	Wai	Parkhandi	27 part	N 18 º1.8.69	E 073 56' 15.94
		1	0.50	0.50	Kolhpur	Satara	Wai	Wai	Parkhandi	32	N 18 º1.6.93	E 073 56' 13.12
		1	0.50	0.50	Kolhpur	Satara	Wai	Wai	Parkhandi	32	N 18 º1.6.93	E 073 56' 13.12
	Total	**50.00**		**25.00**								
i	Soil and moisture conservation works in the forest 1. Construction of Gabiyan Bandhara	9	0.50	4.50	Kolhapur	Sangli	Jath	Jath	Jath	243	N 17'01'55	E 75'13'50
		1	0.50	0.50	Kolhapur	Sangli	Jath	Jath	Hivare	276	N 17'05'03	E 75'03'44
		1	0.50	0.50	Kolhapur	Sangli	Jath	Vhaspeth	Sordi	284	N 17'04'46	E 75'22'25
		5	0.50	2.50	Kolhapur	Sangli	Jath	Vhaspeth	Vhaspeth	254	N 17'6'15	E 75'22'49
		5	0.50	2.50	Kolhapur	Sangli	Jath	Shegoan	Avandhi	252	N 17'7'78	E 75'09'87
		5	0.50	2.50	Kolhapur	Sangli	Jath	Shegoan	Avandhi	271	N 17'7'85	E 75'09'74
	Total	**26**		**13.00**								
	Total Gabyan Bandhara	**96**		**48.00**								

Works proposed					Location of work						Latlong	
Rule No.	Item of work	Quantity	Rate	Amount (Rs. in Lakhs	Circle	Division	Range	Round	Beat	Compartment No	Lattitude	Longitude
1	2	3	4	5	6	7	8	9	10	11	12	13
iii	Construction of Cement Bandhara	1	15.00	15.00	Kolhpur	Satara	Patan	Bhosgaon	Ghotil	556	N17.32.58.65	E-73.83.13.99
		1	15.00	15.00	Kolhpur	Satara	Patan	Patan	morgiri	466	N17.32.58.65	E-73.83.13.99
		1	15.00	15.00	Kolhpur	Satara	Patan	M Peth	Chafal	444A	N-17.48.63.8	E-73.98.31.8
		1	15.00	15.00	Kolhpur	Satara	Patan	Dhoroshi	Dhoroshi	643	N-17.18.705.	E-73.47.459
		1	15.00	15.00	Kolhpur	Satara	Patan	Pachgani	Pachgani	501	N-17.18.705.	E-73.47.459
		1	15.00	15.00	Kolhpur	Satara	Karad	Masura	Kivala	665	N-17.23.4167	E-074.13.0179
		1	15.00	15.00	Kolhpur	Satara	Phaltan	Phaltan	Giravi	814	N 175543.67	E 740940.46
		1	15.00	15.00	Kolhpur	Satara	Phaltan	Aadrki	Salape	873	N 175350.34	E 741406.42
		1	15.00	15.00	Kolhpur	Satara	Phaltan	Aadrki	Aadrki	781	N 175334	E 741554
		1	15.00	15.00	Kolhpur	Satara	Phaltan	Aadrki	Bibi	780	N 175124	E 741819
	Total	**10**		**150.00**								
iii	Soil and moisture conservation works in the forest 2.Construction of Cement Bandhare	1	15	15.00	Kolhapur	Sangli	Jath	Jath	Dafalapur	271	N 16'59'36"	E 75'08'12
		1	15	15.00	Kolhapur	Sangli	Jath	Jath	Dafalapur	270	N 16'59'38"	E 75'08'19
		1	15	15.00	Kolhapur	Sangli	Jath	Jath	Hivare	243	N 17'04'46	E 75'22'25
		1	15	15.00	Kolhapur	Sangli	Jath	Vhaspeth	Sordi	281	N 17'04'46	E 75'22'25
		1	15	15.00	Kolhapur	Sangli	Jath	Vhaspeth	Sordi	276	N 17'04'55"	E 75'22'25
		1	15	15.00	Kolhapur	Sangli	Jath	Vhaspeth	Ankalgi	295	N 16.01.22.26	E 74.39.32.40
		1	15	15.00	Kolhapur	Sangli	Jath	Vhaspeth	Ankalgi	296	N 16.02.22.40	E 74.42.38.80
		1	15	15.00	Kolhapur	Sangli	Jath	Vhaspeth	Vhaspeth	288	N 17'6'15	E 75'22'49
		1	15	15.00	Kolhapur	Sangli	Jath	Shegoan	Avandhi	258	N 17'7'63	E 75'09'86
		1	15	15.00	Kolhapur	Sangli	Jath	Muchandi	Asangi Turk	299	N 16'99'28	E 75'51'95
	Total	**10**		**150.00**								
	Total Cement Bandhara	**20**		**300.00**								
v	Construction of Chek Dam	1	0.45	0.45	Kolhpur	Satara	Waduj	Waduj	Waduj	213	N-17 38 51	E- 74 17 14
		1	0.45	0.45	Kolhpur	Satara	Waduj	Waduj	Waduj	214	N-17 35 32	E- 74 17 13
		1	0.45	0.45	Kolhpur	Satara	Waduj	Waduj	Waduj	217	N-17 35 32	E- 74 17 13
		1	0.45	0.45	Kolhpur	Satara	Waduj	Waduj	Waduj	846	N 17 21 59.75	E 74 29 35.79
		1	0.45	0.45	Kolhpur	Satara	Waduj	Waduj	Waduj	210	N-17 27 00 42	E- 74 40 38 34
		1	0.45	0.45	Kolhpur	Satara	Waduj	Waduj	Waduj	840	N-17 27 00 42	E- 74 40 38 32
		1	0.45	0.45	Kolhpur	Satara	Waduj	Waduj	Waduj	840	N-17 27 02 43	E- 74 40 38 39
		1	0.45	0.45	Kolhpur	Satara	Waduj	Waduj	Waduj	840	N-17 27 0325	E- 74 40 37 30
		1	0.45	0.45	Kolhpur	Satara	Waduj	Waduj	Waduj	840	N-17 27 0325	E- 74 40 37 30
		1	0.45	0.45	Kolhpur	Satara	Waduj	Waduj	Waduj		N 175237.99	E 742424.84
	Total Chek Dam	**10**		**4.50**								

Works proposed					Location of work						Latlong	
Rule No.	Item of work	Quantity	Rate	Amount (Rs. in Lakhs	Circle	Division	Range	Round	Beat	Compartment No	Lattitude	Longitude
1	2	3	4	5	6	7	8	9	10	11	12	13
vi	Forest Pond	1	3.00	3.00	Kolhapur	Kolhapur	Patane	Tudiye	Kolik 1	120	N 15.780481	E 74.254596
		1	3.00	3.00	Kolhapur	Kolhapur	Patane	Tudiye	Kolik 1	121	N 15.761974	E 74.241753
		1	3.00	3.00	Kolhapur	Kolhapur	Patane	Tudiye	Kolik 2	124	N 15.761344	E 74.269698
		1	3.00	3.00	Kolhapur	Kolhapur	Patane	Tudiye	Kolik 2	125	N 15.775966	E 74.278075
		1	3.00	3.00	Kolhapur	Kolhapur	Patane	Patane	Parle	46	N 15.851871	E 74.181759
		1	3.00	3.00	Kolhapur	Kolhapur	Ajara	South Ajara	Maligre	152 A	N 16.130831	E 74.239216
		1	3.00	3.00	Kolhapur	Kolhapur	Ajara	South Ajara	Maligre	257	N 16.118555	E 74.258653
		1	3.00	3.00	Kolhapur	Kolhapur	Ajara	South Ajara	Maligre	260 B	N 16.137743	E 74.287755
		1	3.00	3.00	Kolhapur	Kolhapur	Ajara	South Ajara	Sirsangi	254	N 16.10537	E 74.273735
		1	3.00	3.00	Kolhapur	Kolhapur	Ajara	North Ajara	Salgaon	159	N 16.163048	E 74.186121
		1	3.00	3.00	Kolhapur	Kolhapur	Malkapur	Warun	Warul	1005	N 17.002227	E 73.902488
		1	3.00	3.00	Kolhapur	Kolhapur	Malkapur	Bambwade	Bhedasgaon	1076	N 16.982472	E 73.992767
		1	3.00	3.00	Kolhapur	Kolhapur	Malkapur	Malkapur	Karanjoshi	1056 B	N 16.874025	E 73.925369
		1	3.00	3.00	Kolhapur	Kolhapur	Malkapur	Malkapur	Karanjoshi	1056	N 16.890448	E 73.931171
		1	3.00	3.00	Kolhapur	Kolhapur	Malkapur	Malkapur	Karanjoshi	1061	N 16.86107	E 73.970814
		1	3.00	3.00	Kolhapur	Kolhapur	Gaganbawada	Nivade	Nivade	807	N 16.675313	E 73.939159
		1	3.00	3.00	Kolhapur	Kolhapur	Gaganbawada	Gaganbawada	Dhundwade	774 B	N 16.569678	E 73.924321
		1	3.00	3.00	Kolhapur	Kolhapur	Gaganbawada	Gaganbawada	Dhundwade	776 B	N 16.61061	E 73.961654
		1	3.00	3.00	Kolhapur	Kolhapur	Gaganbawada	Gaganbawada	Gaganbawada	768	N 16.554164	E 73.888981
		1	3.00	3.00	Kolhapur	Kolhapur	Gaganbawada	Gaganbawada	Borbet	747	N 16.512549	E 73.905507
	Total	**20**		**60.00**								
	Construcion of Vantale	1	3.00	3.00	Kolhpur	Satara	Waduj	Waduj	Waduj		N17.3332	E74.1816
		1	3.00	3.00	Kolhpur	Satara	Koregaon	Koregaon	Koregaon		N-17.17.25	E-73.52.20
		1	3.00	3.00	Kolhpur	Satara	Patan	Sanbur	Salve	536	N-17.17.18	E-73.52.08
		1	3.00	3.00	Kolhpur	Satara	Patan	Sanbur	Salve	536	N-17.08.38	E-73.55.02
		1	3.00	3.00	Kolhpur	Satara	Patan	Bhosgaon	Kalagaon	622	N-17.08049	N-17.08049 E73.55.57
		1	3.00	3.00	Kolhpur	Satara	Patan	Bhosgaon	Kalagaon	N	N-17.09.39	E-73.45.31
		1	3.00	3.00	Kolhpur	Satara	Patan	Bhosgaon	Nivi	621	N-17.47.40.5	E-73.96.84.9
		1	3.00	3.00	Kolhpur	Satara	Patan	Dhoroshi	Dhoroshi	643	N-17.2447.5	E 73.51.52.5
		1	3.00	3.00	Kolhpur	Satara	Patan	Patan	Patan	455	N-17.17.21	E-74.02.04
		1	3.00	3.00	Kolhpur	Satara	Patan	M.Peth	Bhahule	509	N 17.18.55.05	E-73.47.44.37

Works proposed					Location of work						Latlong	
Rule No.	Item of work	Quantity	Rate	Amount (Rs. in Lakhs	Circle	Division	Range	Round	Beat	Compartment No	Lattitude	Longitude
1	2	3	4	5	6	7	8	9	10	11	12	13
	Construcion of Vantale	1	3.00	3.00	Kolhpur	Satara	Patan	Pachgani	Pachgani	467	N-17.12.07	E-73.58.08
		1	3.00	3.00	Kolhpur	Satara	Waduj	Waduj	Waduj	830	N-17. 65 54 27	E74 28 07 02
		1	3.00	3.00	Kolhpur	Satara	Waduj	Waduj	Waduj	830	N-17 33 21	E74 18 30
		1	3.00	3.00	Kolhpur	Satara	Waduj	Waduj	Waduj	828	N-17.33.32	E- 74 18 16
		1	3.00	3.00	Kolhpur	Satara	Waduj	Waduj	Waduj	828	N-17.33.32	E- 74 18 16
		1	3.00	3.00	Kolhpur	Satara	Phaltan	Phaltan	Dalwadi	815	N 175344.06	E 742523.95
		1	3.00	3.00	Kolhpur	Satara	Phaltan	Phaltan	Giravi	814	N 175308.4	E 743305.9
		1	3.00	3.00	Kolhpur	Satara	Phaltan	Phaltan	Vadale	772	N 175350.34	E 741406.42
		1	3.00	3.00	Kolhpur	Satara	Phaltan	Aadrki	Aadrki	781	N 175826.66	E 741417.87
		1	3.00	3.00	Kolhpur	Satara	Phaltan	Aadrki	Taradgaon	785	N 175235.65	E 742429.77
	Total	**20.00**	**60.00**	**60.00**								
	Soil and moisture conservation works in the forest 3.Vantale	1	3	3.00	Kolhapur	Sangli	Jath	Jath	Jath	262	N 17'01'55	E 75'13'50
		1	3	3.00	Kolhapur	Sangli	Jath	Jath	Jath	261	N 17'02'53	E 75'13'50
		1	3	3.00	Kolhapur	Sangli	Jath	Jath	Jath	268	N 17'01'75	E 75'13'61
		1	3	3.00	Kolhapur	Sangli	Jath	Jath	Hivare	243	N 17'04'46	E 75'22'25
		1	3	3.00	Kolhapur	Sangli	Jath	Vhaspeth	Sordi	283	N 17'04'45"	E 75'66'25
		1	3	3.00	Kolhapur	Sangli	Jath	Shegoan	Avandhi	287	N 17'13'42	E 75'10'49
		1	3	3.00	Kolhapur	Sangli	Jath	Muchandi	Muchandi	275	N 17'65'80	E 75'48'99
	Total	**7**		**21.00**								
	Total of Creation of Forest ponds/Vantale/Khodtadi	**47**		**141.00**								
	Soil and moisture conservation works in the forest 4.Deep CCT	5	2	10.00	Kolhapur	Sangli	Jath	Jath	Dafalapur	271	N 16'59'36"	E 75'08'12
		5	2	10.00	Kolhapur	Sangli	Jath	Jath	Dafalapur	270	N 16'59'38"	E 75'08'19
	Total of Deep CCT	**10**		**20.00**								
	Construction of Earthen Dam	1	3.00	3.00	Kolhpur	Satara	Patan	Bhosgaon	Kalagaon	549	N-17.09.25	E-73.55.16
		1	3.00	3.00	Kolhpur	Satara	Patan	Bhosgaon	Kalagaon	551	N-17.12.11.8	E-73.59.49.2
		1	3.00	3.00	Kolhpur	Satara	Patan	Bhosgaon	Khubhargaon	546	N-17.15.44	E-73.39.15
		1	3.00	3.00	Kolhpur	Satara	Patan	Sanbur	Salve	533/534	N-17.43.65	E-74.00.77

Works proposed					Location of work						Latlong	
Rule No.	Item of work	Quantity	Rate	Amount (Rs. in Lakhs	Circle	Division	Range	Round	Beat	Compartment No	Lattitude	Longitude
1	2	3	4	5	6	7	8	9	10	11	12	13
	Construction of Earthen Dam	1	3.00	3.00	Kolhpur	Satara	Patan	M Peth	Chafal	444/445	N-17.13.15	E-73.55.40
		1	3.00	3.00	Kolhpur	Satara	Karad	Malkapur	Babarmachi	678	N-17.11.12.43	E-74.16.49.53
		1	3.00	3.00	Kolhpur	Satara	Karad	Malkapur	Shenoli	699	N-17.11.12.43	E-74.16.49.53
		1	3.00	3.00	Kolhpur	Satara	Karad	Masura	Gholapwadi	669	N-17.12.43	E-74.05.21
		1	3.00	3.00	Kolhpur	Satara	Waduj	Waduj	Waduj	834	N-17.46 67 26	E- 74 58 04 25
		1	3.00	3.00	Kolhpur	Satara	Waduj	Waduj	Waduj	836	N-17 67 01 75	E- 74 26 795
		1	3.00	3.00	Kolhpur	Satara	Waduj	Waduj	Waduj	824	N-17 38 51	E- 74 17 14
		1	3.00	3.00	Kolhpur	Satara	Phaltan	Phaltan	Dalwadi	815	N 175547.32	E 741011.07
		1	3.00	3.00	Kolhpur	Satara	Phaltan	Aadrki	Salape	873	N 175327	E 741620
		1	3.00	3.00	Kolhpur	Satara	Phaltan	Aadrki	Bibi	780	N 175231.06	E 742435.51
	Construction of Mati Nala Bandh	1	3.00	3.00	Kolhpur	Satara	Phaltan	Phaltan	Giravi	814	N 175343.07	E 742528.47
	Total	**15.00**	**45.00**	**45.00**								
	Mati Nala Bumds	1	3.00	3.00	Kolhapur	Sangli	Sangli	K.Mankahal	K.Mankhal	251	N 17 09 50.59	E 74 56 43.63
		1	3.00	3.00	Kolhapur	Sangli	Sangli	K.Mankahal	Kuktoli	225	N 16 54 46.69	E 74 44 51.17
		1	3.00	3.00	Kolhapur	Sangli	Sangli	Dandoba	Haroli	163	N 16 54 52.15	E 74 44 07.79
		1	3.00	3.00	Kolhapur	Sangli	Sangli	Dandoba	Gundewadi	162	N 16 55 20.28	E 74 43 29.02
		1	3.00	3.00	Kolhapur	Sangli	Sangli	Dandoba	Gundewadi	159	N 16 89 14.90	E 74 87 74.60
		1	3.00	3.00	Kolhapur	Sangli	Sangli	Bhose	Shipur	166	N 16 86 83.12	E 74 83 01.06
		1	3.00	3.00	Kolhapur	Sangli	Khanapur-Vita	Khanapur-	Khanpur	194	N $17^0$32'33.4"	E $74^0$74'95.53"
		1	3.00	3.00	Kolhapur	Sangli	Khanapur-Vita	Khanapur-	Balwadi	195	N $17^0$13'87.4"	E $74^0$50'01.6"
		1	3.00	3.00	Kolhapur	Sangli	Khanapur-Vita	Khanapur-	Palashi	183	N $17^0$16'46.8"	E $74^0$34'41.1"
		1	3.00	3.00	Kolhapur	Sangli	Khanapur-Vita	Vita	Vita	138	N $17^0$18'50.5"	E $74^0$40'06.3"
		1	3.00	3.00	Kolhapur	Sangli	Khanapur-Vita	Vita	Lengare	136	N $17^0$24'12.8"	E $74^0$36'13.0"
		1	3.00	3.00	Kolhapur	Sangli	Khanapur-Vita	Vita	Salshinge	121	N 17'16'13.40	E 074'19'26.40
		3	3.00	9.00	Kolhapur	Sangli	Kadegaov-Palus	Kadegaon,	Kadegaon,	114, 108,	N 17'15'20.	E 074'17'08
	Total	**15**		**45.00**								
	Total of Earthan/Mati Nala Bumds	**30**		**90.00**								
	Total 5(2)(g)SMC work	**213**	**45.00**	**603.50**								

Works proposed					Location of work						Latlong	
Rule No.	**Item of work**	**Quantity**	**Rate**	**Amount (Rs. in Lakhs**	**Circle**	**Division**	**Range**	**Round**	**Beat**	**Compartment No**	**Lattitude**	**Longitude**
1	**2**	**3**	**4**	**5**	**6**	**7**	**8**	**9**	**10**	**11**	**12**	**13**
5(2)(k)	**Establishement, Operation and Maintenance of anima rescue centre/ and veterinary treatment facilities for wild animals**											
	Establishment, operation and maintenance of animal rescue centre/ Transit treatment Centre	1	2.00	2.00	Kolhapur	sangli	sangli	Bhose	Bhose	159	N 16 52 26.27	E 74 37 14.00
	Veterinary treatment facilities for wild animals	1	2.00	2.00	Kolhapur	sangli	sangli	Bhose	Bhose	159	N 16 52 26.27	E 74 37 14.00
	Animal seizing & capturing devices	1	3.00	3.00	Kolhapur	sangli	sangli	Bhose	Bhose	159	N 16 52 26.27	E 74 37 14.00
		1	5.00	5.00	Kolhapur	Sangli	Jath	Jath	Jath	267	N 17'01'75	E 75'13'61
	Rescue emergency operations	1	2.00	2.00	Kolhapur	sangli	sangli	Bhose	Bhose	159	N 16 52 26.27	E 74 37 14.00
	Strengthening of Rapid rescue teams	1	5.00	5.00	Kolhapur	sangli	sangli	Bhose	Bhose	159	N 16 52 26.27	E 74 37 14.00
	Total 5(2)(k)	**6.00**	**19.00**	**19.00**								
5(2)(1)	**Supply of wood saving cooking appliancs and other forest produce saving devices in Forest fringe villages**											
	Supply of LPG Cooking Gas	1000	0.075	75.00	Kolhapur	Kolhapur	Forest fringe villages					
	Grand Total 5(2)(1)	**1000**	**0.075**	**75.00**								
	Grand Total for Activities under not less than 80% component	**23279.93**		**1434.18**								
5(3)(e)	**Construction of Residential and Official Buildings in forests For Fornt line staffs deployed for protection of forest and wildilfe**											
i	Construction of Type I Quarters	1	22.00	22.00	Kolhapur	Kolhapur	Malkapur	Malkapur	Kotoli	1007 A	N 17°.2143.04"	E 73°58'29.33"
		1	22.00	22.00	Kolhapur	Kolhapur	Malkapur	Bambavde	Bambavde	829	N 16°53'22.71"	E 73°57'37.9"
	Total Type I Quarters	**2**	**44**	**44.00**								
ii	Construction of Type II Quarters	1	26.0	26.00	Kolhapur	Kolhapur	Chandgad	Kanur Khurd	Kanur Khurd	78 C	N 16°53'57.39"	E 73°49'56.52"
		1	26	26.00	kolhapur	sangli	Shirala	Bilashi	Biur	53	N 16 58 53	E74 07 38
	Total	**2**		**52.00**								
iii	Construction of Type III Quarters	1	36	36.00	Kolhapur	Kolhapur	Pendakhale	Pendakhale	Pendakhale		N 16°50'3555"	E 73°57'15.81"
		1	36.00	36.00	Kolhpur	Satara	M"shwar	M"shwar	M"shwar		N 17.55.25.46	E 73.39.39.68
		1	36	36.00	kolhapur	sangli	Jath	Jath	Jath	143	N $17^0$13'48.3"	E $74^0$32'07.5"
	Total	**3**		**108.00**								

Works proposed					Location of work						Latlong	
Rule No.	**Item of work**	**Quantity**	**Rate**	**Amount (Rs. in Lakhs**	**Circle**	**Division**	**Range**	**Round**	**Beat**	**Compartment No**	**Lattitude**	**Longitude**
1	**2**	**3**	**4**	**5**	**6**	**7**	**8**	**9**	**10**	**11**	**12**	**13**
iv	Renge Office	1	45	45.00	Kolhapur	Kolhapur	Pendakhale	Pendakhale	Pendakhale	856B	73.930833	16.768888
		1	45	45.00	Kolhapur	sangli	Khanapur - Vitta	Vita	Vita (Khambhale		N $17^0$13'48.3"	E $74^0$32'07.5"
	Total	**2**		**90**								
		9		**294.00**								
5(3)(i)	Publicity --cum --awareness programme and exhibition on the various schemes being implemented by the State Authority from State Fund	LS	- --	2.00	Kolhapur	Kolhapur						
		LS	- --	2.00	Kolhapur	Satara						
		LS	--	2.00	Kolhapur	Sawantwadi						
		LS	--	2.00	Kolhapur	Sangli						
		LS	--	2.00	Kolhapur	Chiplun						
	Total			**10.00**								
	Total for works under not more than 20% component	**9.00**		**304.00**								
Grand Total NPV		**23288.93**		**1738.18**								

ANNUAL PLAN OF OPERATIONS 2022-23

FORMAT VII A---- Forestry and other activities proposed under Net Present Value amount (Please see Rule no. 5(2), 5(3), and proviso under Rule 5(3) (NPV - 04)

Nagpur Territorial Circle

Works proposed					Location of work						Latlong	
Rule No.	**Item of work**	**Quantity**	**Rate**	**Amount (Rs. in Lakhs**	**Circle**	**Division**	**Range**	**Round**	**Beat**	**Comartments No**	**Latitude**	**Longitude**
1	2	3	4	5	6	7	8	9	10	11	12	13
5 (2)	**Works under Not less than 80 % component (Rule 5 (2))**											
5(2)(a)	**ANR Plantation (PPO)**	10.00	1.69	17.00	Nagpur	Wardha	Karanja	Junapani	Chincholi W	151 RF	N-21 05.208	E- 78 20.154
		30.00	1.69	51.00	Nagpur	Wardha	Arvi	Wadhona	Hiwara	136 PF	N-21.037298	E-78.352897
		10.00	1.69	17.00	Nagpur	Wardha	Ashti	Manikwada	Manikwada	110 RF	N-21.260895	E-78.264850
	ANR- Total	**50.00**		**85.00**								
	ANR Plantation (PPO)	30	1.69	51.00	Nagpur	Bhandara	Nakadongari	Chicholi South	karli -1	83 RF	N-21.301669	E-079.415534
		30	1.69	50.70	Nagpur	Bhandara	Paoni	Bhuyar	Sirsala	319RF	N-20.42.41	E-079.38.37
		30	1.69	50.70	Nagpur	Bhandara	Paoni	Sawarla	Gudegaon	311 RF	N-20.73.34.24	E-079.68.13.32
		20	1.69	33.80	Nagpur	Bhandara	Paoni	Sawarla	Kanhalgaon	314 RF	N-20.59.43.47	E-079.68.99.32
		20	1.69	33.80	Nagpur	Bhandara	Adyal	Adyal	Kesalwada	210 Pf	N-20.95.56	E-79.75.60
		30	1.69	51.00	Nagpur	Bhandara	Adyal	Kidali	Kidadi-2	211 PF	N-20.55.45	E-79.49.18
		30	1.69	51.00	Nagpur	Bhandara	Adyal	Madagi	Purkabodi-1	290 RF	N-21.00.16	E-79.77.97
		25	1.69	42.30	Nagpur	Bhandara	Bhandara	Madagi-W	Khurshipar	283	N-21.02.29	E-79.44.57
		10	1.69	16.90	Nagpur	Bhandara	Bhandara	Koka	Saleheti	96 PF	N-21.10.21	E-79.45.14
		30	1.69	51.00	Nagpur	Bhandara	Bhandara	Dawadipar	Khapa	286 RF	N-21.03.44	E-79.41.47
		10	1.69	16.90	Nagpur	Bhandara	Bhandara	Dawadipar	Dawadipar	285 RF	N-21.04.47	E-79.41.40
	Bhandara Division ANR Plantation Total	**265**		**449.10**								
	ANR Plantation Total	**315.00**		**534.10**								
5(2)(a)	**Assisted Natural Regeneration (FYO)**	20	0.90	18.00	Nagpur	Bhandara	Bhandara	Madgi (w)	Khurshipar	184	N- 21.02'18"	E-079.44'37"
		20	0.90	18.00	Nagpur	Bhandara	Pauni	Bhuyar	Waygaon	321 RF	N-20.71.805	E-079.59.949
		10	0.90	9.00	Nagpur	Bhandara	Adyal	Adyal	Kesalwada	740 ZJ	N 20.53.44.58	E079.44.33.45
		10	0.90	9.00	Nagpur	Bhandara	Adyal	Adyal	Pilandri	306 PF	N 20.34.50.01	E 079.45.34.10
		20	0.90	18.00	Nagpur	Bhandara	Sakoli	Umari	Umari	443 New RF,	N 21°03'54.43"	E 080°01'09.17"
		10	0.90	9.00	Nagpur	Bhandara	Tumsar	Tumsar	Jambhora	404 ZJ	N 21.13.22	E 79.48.19
		10	0.90	9.00	Nagpur	Bhandara	Nakadongari	Chicholi South	Karli 2	83 RF	N-21.50852	E-79.713707
		10	0.90	9.00	Nagpur	Bhandara	Jamkandri	Mangerli	Mangerli 2	Comp. No. 40	N 21,29,40.06	E 079,29,36.07
	Bhandara Division FYO Total	**110**	**7.20**	**99.00**								
	Nagpur Circle Total ANR	**425**		**633.10**								

Works proposed					Location of work						Latlong	
Rule No.	**Item of work**	**Quantity**	**Rate**	**Amount (Rs. in Lakhs**	**Circle**	**Division**	**Range**	**Round**	**Beat**	**Comartments No**	**Latitude**	**Longitude**
1	2	3	4	5	6	7	8	9	10	11	12	13
5(2)(B)	**A.R. (4th Y.O Plantation, 179.00 ha)**	7	0.18	1.26	Nagpur	Nagpur	Ramtek	Ramtek	Mouda	244/ & 353	N.21 14 58.35	E. 79 26 56 16
		12	0.18	2.16	Nagpur	Nagpur	Kondhali	Mendhepathar	Vanbodi	122 PF	N.21 14 25.29	E. 78 42 34 31
		15	0.18	2.70	Nagpur	Nagpur	Kondhali	Agamdanagat	Murti	63 PF	N.21 11 03.44	E. 78 33 38 21
		20	0.18	3.60	Nagpur	Nagpur	Kondhali	Agamdanagat	Murti	63 PF	N.21 11 11.84	E. 78 32 50 38
		10	0.18	1.80	Nagpur	Nagpur	Narkhed	Lohari Savanga	Lohara	63 PF	N.21 16 00.40 5	E. 78 40 96.38 9
		20	0.18	3.60	Nagpur	Nagpur	Kalmeshwar	Aadasa	Aadasa	132,135, Z.J	N.21 23 52.56	E. 78 52 10.01
		10	0.18	1.80	Nagpur	Nagpur	Butibori	Butibori E	Butibori	32 Z.J	N.20 53 56.50	E. 78 30 15
		10	0.18	1.80	Nagpur	Nagpur	Butibori	Butibori E	Wadgaon	5 Z.J	N.20 48 04 23	E.079 00 25 63
		25	0.18	4.50	Nagpur	Nagpur	Butibori	Amghat	Kohla	398 PF	N.20 47 20 93	E.079 05 36 24
		25	0.18	4.50	Nagpur	Nagpur	North	kuhii	kuhii	395PF	N.21 2 53.00	E. 079 24 22.00
		25	0.18	4.50	Nagpur	Nagpur	North	Deoli	Tambekhani	401 PF	N.20 53 10.00	E. 079 09 8.00
	Nagpur Division 4th Year Total	**179**		**32.22**								
	AR Plantation **4th Year**	20.00	0.18	3.60	Nagpur	Wardha	Karanja	Sindivihiri	Yenidodaka	47RF	N-21.03683	E-78.57983
		25.00	0.18	4.50	Nagpur	Wardha	Karanja	Karanja	Taroda	205	N-21.22230	E-78.40172
		45.00	0.18	8.10	Nagpur	Wardha	Samudrapur	Samudrapur	Samudrapur	2 ,145, 158, 160	N-20.69313	E-78.97154
		15.00	0.18	2.70	Nagpur	Wardha	Talegaon	Pardi	Ajnadevi	111PF	N-21.17878	E-78.34327
		20.00	0.18	3.60	Nagpur	Wardha	Talegaon	Sarwadi	Indarmari	127RF, 128RF	N-21.14330	E-78.24064
		15.00	0.18	2.70	Nagpur	Wardha	Ashti	Manikwada	Wadegaon	64 PF	N-21.28676	E-78.30372
		20.00	0.18	3.60	Nagpur	Wardha	Ashti	Ashti	Lahan Arvi	15 RF	N-21.23952	E-78.13125
		15.00	0.18	2.70	Nagpur	Wardha	Hingani	Seloo	Kelzar Janglapur-	254,83,74	N-20.85498	E-78.75913
		25.00	0.18	4.50	Nagpur	Wardha	Arvi	Pimpalkhuta	Pimpalkhuta	158 RF	N-20.96861	E-78.34103
	Wardha Division 4 th year Total	**200.00**		**36.00**								

Works proposed					Location of work						Latlong	
Rule No.	Item of work	Quantity	Rate	Amount (Rs. in Lakhs	Circle	Division	Range	Round	Beat	Comartments No	Latitude	Longitude
1	2	3	4	5	6	7	8	9	10	11	12	13
5(2)(b) i	Artificial Regeneration 4th Y.O. Works	20.00	0.18	3.60	Nagpur	Gondia	Gondia	Gondia	Gondia	Batana 382	N-21.29.360	E-80.14.550
		15.00	0.18	2.70	Nagpur	Gondia	Gondia	Gondia	Gondia	Pindkepar	N-21.35.000	E-80.12.460
		10.00	0.18	1.80	Nagpur	Gondia	Gondia	Gondia	Rawanwadi	Garra 397	N-21.26.270	E-80.09.530
		10.00	0.18	1.80	Nagpur	Gondia	Salekasa	Salekasa	Pipariya	Ramatola-1925	N-21.21.681	E-80.31.236
		15.00	0.18	2.70	Nagpur	Gondia	Salekasa	Salekasa	Pipariya	Padhari - 468	N-21.33.225	E-80.53.232
		10.00	0.18	1.80	Nagpur	Gondia	Salekasa	Salekasa	Kularbhatti	Kularbhati-	N-21.21.490	E-80.49.359
		10.00	0.18	1.80	Nagpur	Gondia	N Deori	Bhagi	Amgaon	Jamnapur 560	N-21.08.684	E-80.35.797
		15.00	0.18	2.70	Nagpur	Gondia	N Deori	Deori	Murpar To	Sundaridand	N-21.03.030	E-80.25.193
		25.00	0.18	4.50	Nagpur	Gondia	S Deori	Kanhalgaon	Sindibiri	Sindibiri 673	N-21.58.410	E-80.22.140
		10.00	0.18	1.80	Nagpur	Gondia	Gothangaon	Gothangaon	Tukumnrayn	Tukumnarayan	N-20.73.423	E-80.15.726
		4.00	0.18	0.72	Nagpur	Gondia	Goregaon	Pindkepar	Hirapur	Malpuri 453	N-21.30.107	E-79.12.019
		5.00	0.18	0.90	Nagpur	Gondia	Goregaon	Ghumarra	Mohadi	Kalimati 445	N-21.29.721	E-79.30.942
		17.00	0.18	3.06	Nagpur	Gondia	Tirora	Vadegaon	Kodelohara	Murmadi-891	N-21.18.414	E-79.52.332
		10.00	0.18	1.80	Nagpur	Gondia	Tirora	Vadegaon	Lonara	Kulpa-366	N-21.16.553	E-79.51.336
		18.00	0.18	3.24	Nagpur	Gondia	Tirora	Vadegaon	Kodelohara	Koylari-365	N-21.17.560	E-79.53.180
		5.00	0.18	0.90	Nagpur	Gondia	Tirora	Tirora	Tirora	Umari-912	N-21.23.123	E-79.53.123
		5.00	0.18	0.90	Nagpur	Gondia	Tirora	Tirora	Tirora	Chikhali-862	N-21.22.954	E-79.58.412
	Gondia Division 4th Year Total	**204.00**		**36.72**								
5(2)(b) i	**Artificial Regeneration 4th YO Works**	10	0.18	1.80	Nagpur	Bhandara	Lakhani	Lakhani	Gadegaon	Z.J. 315, 448	N21º05.54.55	E 079º47.24.97
		10	0.18	1.80		Bhandara	Bhandara	Koka	Saleheti	96 PF	N- 21.11'1"	E-079.44'57"
		10	0.18	1.80	Nagpur	Bhandara	Lakhani	Jambhali	Jambhali	111 PF	N21º05.54.55	E 079º47.24.97
		10	0.18	1.80	Nagpur	Bhandara	Lakhani	Jambhali	Jambhali	111 PF	N 21º4.42	E 079º59.1
		10	0.18	1.80	Nagpur	Bhandara	Jamkandri	Andhalgaon	Hardoli	Sr. No. 106,	N 21º6.43	E 079º57.18
		20	0.18	3.60	Nagpur	Bhandara	Jamkandri	Andhalgaon	Hardoli	Sr. No.71, 100	N 21,20,08.51	E 079,33,50.79.
		15	0.18	2.70	Nagpur	Bhandara	Sakoli	Umari	Gondumari	375 RF	N 21,19,11.95	E 793514.05
		10	0.18	1.80	Nagpur	Bhandara	Sakoli	Sakoli	Kinhi	157 PF	N 21°02'53.86"	E 080°09'47.69"
		10	0.18	1.80	Nagpur	Bhandara	Sakoli	Umari	Sawarbandh	387 Z.J.	N 21°08'08.42"	E 080°02'48.36"
		15	0.18	2.70	Nagpur	Bhandara	Lakhandur	Lakhandur	Antargaon 1	327 PF	N 21°00'37.00"	E 080°01'40.00"
		20	0.18	3.60	Nagpur	Bhandara	Tumsar	Hardoli	Sonegaon II	254 PF	N 20 46 27	E 79 53 08
		10	0.18	1.80	Nagpur	Bhandara	Tumsar	Hardoli	Chulhardoh	6, 7, 8, 10 ZJ	N 21.26.26	E 79.48.51
		10	0.18	1.80	Nagpur	Bhandara	Tumsar	Chicholi/N	Chicholi/S	81 RF	N 21.46561	E 79.778353
		10	0.18	1.80	Nagpur	Bhandara	Pauni	Sawarala	Gudegaon	311 RF	N 21.482855	E 79.706858
		10	0.18	1.80	Nagpur	Bhandara	Nakadongari	Bagheda	Asalpani East	63 RF	N-21.2929	E- 079.3925
		20	0.18	3.60	Nagpur	Bhandara	Adyal	Madgi E.	Chalana-2	2,27,242 ZJ	N-20.43.07.3	E 079.43276
	Bhandara Division 4th Year Total	**200**		**36.00**								
	Nagpur Circle Total AR 4 th year	**783.00**		**140.94**								

Works proposed					Location of work						Latlong	
Rule No.	**Item of work**	**Quantity**	**Rate**	**Amount (Rs. in Lakhs**	**Circle**	**Division**	**Range**	**Round**	**Beat**	**Comartments No**	**Latitude**	**Longitude**
1	2	3	4	5	6	7	8	9	10	11	12	13
5(2)(C)	**Silvicultural operations in forests (Fodder Development)**	-	-	-								
i	**Fodder Development (PPO Works)**	10	2.28	22.80	Nagpur	Nagpur	North Umred	Champa	Champa	330 RF	N 20 57 12	E 079 09 44
		10	2.28	22.80	Nagpur	Nagpur	North Umred	Champa	Champa	S.N. 39 ZJ	N 20 57 58	E 079 11 8
		5	2.28	11.40	Nagpur	Nagpur	North Umred	Markardhokda	Udasa	385 RF	N 20 57 58	E 079 11 8
		12	2.28	27.36	Nagpur	Nagpur	Butibori	Amghat	Amghat	396 RF	N20'78.88.82	E79'12.31.92
	Nagpur Division PPO Total	**37**		**84.36**								
5	**Fodder Development (PPO Work)**	20.00	2.28	45.60	Nagpur	Wardha	Talegaon	Pardi	Susundra	97/1 PF	N 21.08'495"	E 78.17'041"
		15.00	2.28	34.20	Nagpur	Wardha	Talegaon	Pardi	Botona	104 RF	N 21.14'02.10"	E 78.17'45.62"
		20.00	2.28	45.60	Nagpur	Wardha	Talegaon	Pardi	Sawardhoh	100PF	N 21.13'37.69"	E 78.21'29.81"
		10.00	2.28	22.80	Nagpur	Wardha	Talegaon	Pardi	Ajanadevi	112/1 PF	N 21.11'48"	E 78.21'12"
		15.00	2.28	34.20	Nagpur	Wardha	Kharangana	Bagdapur	Aajndoh (N)	196 RF	N-21'05'30	E-78'27'15
		15.00	2.28	34.20	Nagpur	Wardha	Kharangana	Borgaon Gondi	Susund (N)	226 RF	N-20'59'09	E-78'31'08
		15.00	2.28	34.20	Nagpur	Wardha	Kharangana	Bagdapur	Aajndoh (N)	197 RF	N-21'04'49	E-78'28'02
		12.00	2.28	27.36	Nagpur	Wardha	Kharangana	Bagdapur	Aajndoh (S)	194 RF	N-21'04'51	E-78'26'46
		15.00	2.28	34.20	Nagpur	Wardha	Kharangana	Bagdapur	Bangdapur (S.)	222 RF	N-21'02'10	E-78'30'52
		25.00	2.28	57.00	Nagpur	Wardha	Ashti	Pandhurna	Porgavhan	118 RF	N 21'16'43	E 78'10'44
		5.00	2.28	11.40	Nagpur	Wardha	Arvi	Arvi	Arvi	141 RF	N 21 03 61	E 78 29 31
		10.00	2.28	22.80	Nagpur	Wardha	Arvi	Bramhanwada	Bramhanwada (S)	172 RF	N 21 00 51	E 78 25 41
		10.00	2.28	22.80	Nagpur	Wardha	Arvi	Pimpalkhuta	Danapur	170 RF	N 20 95 90	E 78 39 88
		10.00	2.28	22.80	Nagpur	Wardha	Arvi	Rohna	Pargothan	91 PF	N 20 56 34	E 78 17 12
		5.00	2.28	11.40	Nagpur	Wardha	Arvi	Bramhanwada	Garpit W	185 RF	N 21 04 89	E 78 41 10
		10.00	2.28	22.80	Nagpur	Wardha	Arvi	Bramhanwada	Garpit E	188 RF	N 21 01 59	E 78 24 34
		10.00	2.28	22.80	Nagpur	Wardha	Arvi	Bramhanwada	Panjra E	175 RF	N 21 01 51	E 78 24 51
		5.00	2.28	11.40	Nagpur	Wardha	Arvi	Bramhanwada	Bramhanwada (N)	205 RF	N 21 03 14	E 78 26 50
		10.00	2.28	22.80	Nagpur	Wardha	Arvi	Bramhanwada	Khairwada	171 RF	N 21 00 53	E 78 39 66
		5.00	2.28	11.40	Nagpur	Wardha	Arvi	Bramhanwada	garpit W	183 RF	N 21 03 00	E 78 24 00
		5.00	2.28	11.40	Nagpur	Wardha	Arvi	Bramhanwada	Garpit E	186 RF	N 21 03 00	E 78 25 00
		5.00	2.28	11.40	Nagpur	Wardha	Arvi	Bramhanwada	Garpit E	187 Rf	N 21 02 00	E 78 26 04
		5.00	2.28	11.40	Nagpur	Wardha	Arvi	Bramhanwada	Panjra E	174 RF	N 21 00 51	E 78 25 00
		5.00	2.28	11.40	Nagpur	Wardha	Arvi	Bramhanwada	Bramhanwada (N)	203 RF	N 21 04 08	E 78 27 59
		5.00	2.28	11.40	Nagpur	Wardha	Arvi	Bramhanwada	Panjra Gondi	176 Rf	N 21 02 03	E 78 23 47

Works proposed					Location of work						Latlong	
Rule No.	**Item of work**	**Quantity**	**Rate**	**Amount (Rs. in Lakhs**	**Circle**	**Division**	**Range**	**Round**	**Beat**	**Comartments No**	**Latitude**	**Longitude**
1	2	3	4	5	6	7	8	9	10	11	12	13
5	**Fodder Development (PPO Work)**	5.00	2.28	11.40	Nagpur	Wardha	Arvi	Bramhanwada	Panjra Gondi	177 RF	N 21 04 35	E 78 39 26
		5.00	2.28	11.40	Nagpur	Wardha	Arvi	Wadhona	Bedhona	156 RF	N 21 00 11	E 78 17 39
		5.00	2.28	11.40	Nagpur	Wardha	Arvi	Wadhona	Bedhona	157 RF	N 20 58 09	E 78 19 49
		5.00	2.28	11.40	Nagpur	Wardha	Arvi	Pimpalkhuta	Gumgaon	158 RF	N 20 57 30	E 78 20 10
		5.00	2.28	11.40	Nagpur	Wardha	Arvi	Pimpalkhuta	Gumgaon	159 RF	N 20 56 50	E 78 19 44
		5.00	2.28	11.40	Nagpur	Wardha	Arvi	Pimpalkhuta	Kinhala	163 RF	N 20 54 49	E 78 21 34
		5.00	2.28	11.40	Nagpur	Wardha	Arvi	Pimpalkhuta	Kinhala	162 RF	N 20 55 08	E 78 20 50
		5.00	2.28	11.40	Nagpur	Wardha	Arvi	Wadhona	Chincholi W	143 RF	N 23 03 50	E 78 19 30
		5.00	2.28	11.40	Nagpur	Wardha	Arvi	Rohna	Sawangi	93 PF	N 20 54 12	E 78 18 39
		5.00	2.28	11.40	Nagpur	Wardha	Arvi	Rohna	Sawangi	94 PF	N 20 53 12	E 78 18 41
		10.00	2.28	22.80	Nagpur	Wardha	Karanja	Dhanoli	Met (W.)	41 RF	N 21 2 40.16	E 78 36 38.82
	Wardha Division (PPO) Total	**327.00**		**745.56**								
5(2)(c) i	**Fodder Development (PPO Works)**	7.00	2.28	15.96	Nagpur	Gondia	Navegaon bandh	Navegaon	Chingi-2	190 RF	N- 20.56.712	E- 80.05.001
		5.00	2.28	11.40	Nagpur	Gondia	Navegaon bandh	Dhabepawni	Yelodi	512 RF	N-20.55.300	E-80.03.380
		10.00	2.28	22.80	Nagpur	Gondia	Narth / Deori	Bhagi	Murdoli	18, 569	N-21.04.56.4	E-80.18.35.7
		5.00	2.28	11.40	Nagpur	Gondia	Amgaon	Amgaon	Birsi	489 PF	N-21.22.251	E-80.17.330
		5.00	2.28	11.40	Nagpur	Gondia	Goregaon	Mohadi	Ghumarra	1044 ZJ	N-21.18.350	E-80.17.220
		3.00	2.28	6.84	Nagpur	Gondia	Chichgarh	Kakodi	Mispiri	1,387	N-20.50.46	E-80.30.120
		4.00	2.28	9.12	Nagpur	Gondia	Chichgarh	Kakodi	Mahaka	1355C	N-20.50.096	E-80.32.533
	Gondia Division PPO Total	**39.00**		**88.92**								
5(2)(c) i	**Fodder Development (PPO)**	15	2.28	34.20	Nagpur	Bhandara	Bhandara	Bhandara	Malipar	173 PF	N- 21.05'41.7"	E-079.43'40.5"
		13	2.28	29.64	Nagpur	Bhandara	Tumsar	Hardoli	Sonegaon I	15 PF	N 21.28.796	E 79.48.107
		10	2.28	22.80	Nagpur	Bhandara	Tumsar	Hardoli	Chulhardoh	19 PF	N 21.469983	E 79.790217
		10	2.28	22.80	Nagpur	Bhandara	Pauni	Dhanori	Dhanori 2	233 PF	N-20.44.21	E-079.37.23
		15	2.28	34.20	Nagpur	Bhandara	Pauni	Dhanori	Dhanori 2	233 PF	N-20.44.17	E-079.37.03
		8.36	2.28	19.06	Nagpur	Bhandara	Lakhani	Jambhali	Baradkinhi	118 PF	N21º02.676	E079º53.677
		5	2.28	11.40	Nagpur	Bhandara	Lakhani	Jambhali	Baradkinhi	118 PF	N21º02.676	E079º53.677
		5	2.28	11.40	Nagpur	Bhandara	Nakadongari	Nakadongari	Nakadongari-1	01 PF	N-21.300233	E-79.383863
	Bhandara Division PPO Total	**81.36**	**18.24**	**185.50**								
	Nagpur Circle Total PPO	**484.36**		**1104.34**								

Works proposed					Location of work						Latlong	
Rule No.	**Item of work**	**Quantity**	**Rate**	**Amount (Rs. in Lakhs**	**Circle**	**Division**	**Range**	**Round**	**Beat**	**Comartments No**	**Latitude**	**Longitude**
1	2	3	4	5	6	7	8	9	10	11	12	13
3	**Fodder Development - FYO**	5.00	1.08	5.40	Nagpur	Wardha	Samudrapur	Girad	Khursapar	316 RF	N-20.678333	E-79.072778
		10.00	1.08	10.80	Nagpur	Wardha	Samudrapur	Girad	Shivanfal	318 RF	N-20.606222	E-79.127722
		5.00	1.08	5.40	Nagpur	Wardha	Hingani	Seloo	Etada	2,05,229	N-20.807194	E-78.768
		10.00	1.08	10.80	Nagpur	Wardha	Karanja	Dhanoli	Methirji	41RF	N-21.042222	E-78.611667
		25.00	1.08	27.00	Nagpur	Wardha	Wardha	Hingangaht	Kapsi	1,15 to 26	N-20.436342	E-78.589631
	Wardha Division FYO Total	**55.00**		**59.40**								
	Nagpur Circle Total FYO	**55.00**		**59.40**								
	Fodder Development (SYO Works)	4	0.73	2.92	Nagpur	Nagpur	North Umred	Makardhokda	Udasa	385 RF	N 21 0'17"	E 79 10' 2"
		4	0.73	2.92	Nagpur	Nagpur	North Umred	Champa	Pachgaon	327 A PF	N 20 59'59"	E 79 11' 44"
		4	0.73	2.92	Nagpur	Nagpur	North Umred	Champa	Pachgaon	328 PF	N 20 54'27"	E 79 16' 5"
	Nagpur Division SYO Total	**12**		**8.76**								
2	**Fodder Development SYO**	15.00	0.73	10.95	Nagpur	Wardha	Arvi	Rohana	Saldhara	164 RF	N-20.866944	E-78.408333
		20.00	0.73	14.60	Nagpur	Wardha	Arvi	Pinpakhuta	Danapur	170 RF	N-20.96394	E-78.398362
	Wardha Division SYO Total	**35.00**		**25.55**								
	Nagpur Circle Total SYO	**47.00**		**34.31**								
	Nagpur Circle Total	**586.36**		**1198.05**								
Forest Protection												
5(2)(D)i	**Protections of plantation & Forests**											
i	Encrochment Removal & Forest Protection	10 ha		30.00	Nagpur	Nagpur	Kalmeshwar	Bazragaon	Satnavri	148 PF	N 21.13 84 95	E 78 81 83 98
		2 ha		5.00	Nagpur	Nagpur	Katol	Isapur	Lakhori	171 S.r. (Sec 4 RF)	N 21 24 45 74	E 78 66 87 84
		1 ha		3.00	Nagpur	Nagpur	North Umred	Markhokda	Markhokda	11	N 20 52 38	E 79 12 19
		1 ha		3.00	Nagpur	Nagpur	North Umred	Deoli	Medenpar	353	N 20 49 27 00	E 79 08 36 00
		1 ha		3.00	Nagpur	Nagpur	North Umred	Markhokda	Udasa	10	N 20 55 56	E 79 25 1
		1 ha		3.00	Nagpur	Nagpur	North Umred	Deoli	Deoli	352	N 20 50 46	E 79 11 48
		1 ha		5.00	Nagpur	Nagpur	South Umred	Umred	Dhurkkheda	396 PF	N 20 43 5.2	E 079 13 15 .0
		1 ha		1.55	Nagpur	Nagpur	Butibori	Amghat	Shedeshwar	362 PF	N 20.45.40	E 79.07.49

Works proposed					Location of work						Latlong	
Rule No.	Item of work	Quantity	Rate	Amount (Rs. in Lakhs	Circle	Division	Range	Round	Beat	Comartments No	Latitude	Longitude
1	2	3	4	5	6	7	8	9	10	11	12	13
i	Encrochment Removal & Forest Protection	1 ha		1.55	Nagpur	Nagpur	Butibori	Amghat	Shedeshwar	362 PF	N 20.45.83	E 79.07.87
		1 ha		1.55	Nagpur	Nagpur	Butibori	Amghat	Shedeshwar	362 PF	N 20.45.41	E 79.07.51
		1 ha		1.55	Nagpur	Nagpur	Butibori	Amghat	Shedeshwar	362 PF	N 20.45.47	E 79.07.54
		1 ha		1.55	Nagpur	Nagpur	Butibori	Amghat	Shedeshwar	362 PF	N 20.45.46	E 79.07.51
		1 ha		1.55	Nagpur	Nagpur	Butibori	Amghat	Shedeshwar	362 PF	N 20.45.42	E 79.07.51
		1 ha		1.55	Nagpur	Nagpur	Butibori	Amghat	Shedeshwar	362 PF	N 20.45.43	E 79.07.51
		1 ha		1.55	Nagpur	Nagpur	Butibori	Amghat	Shedeshwar	362 PF	N 20.45.45	E 79.07.59
		1 ha		1.55	Nagpur	Nagpur	Butibori	Amghat	Shedeshwar	362 PF	N 20.45.44	E 79.07.52
		1 ha		1.55	Nagpur	Nagpur	Butibori	Amghat	Shedeshwar	354 PF	N 20.44.51	E 79.07.41
		1 ha		1.55	Nagpur	Nagpur	Butibori	Amghat	Shedeshwar	354 PF	N 20.44.50	E 79.07.45
		1 ha		1.55	Nagpur	Nagpur	Butibori	Amghat	Shedeshwar	354 PF	N 20.44.49	E 79.07.40
		1 ha		1.55	Nagpur	Nagpur	Butibori	Amghat	Shedeshwar	354 PF	N 20.44.49	E 79.07.43
		1 ha		1.55	Nagpur	Nagpur	Butibori	Amghat	Borimanjra	772 RF	N 20.78.43.18	E 79.09.68.86
		1 ha		1.55	Nagpur	Nagpur	Butibori	Amghat	Amghat 2	385 RF	N20.79.44.88	E 79.18.65.05
		1 ha		1.55	Nagpur	Nagpur	Butibori	Amghat	Amghat 2	388 RF	N 20.78.00.63	E 79.16.41.94
		1 ha		1.55	Nagpur	Nagpur	Butibori	Amghat	Amghat 2	388 RF	N 20.77.90.36	E 79.16.00.91
		1 ha		1.55	Nagpur	Nagpur	Butibori	Amghat	Shedeshwar	354 PF	N 20.44.50	E 79.07.40
		1 ha		1.55	Nagpur	Nagpur	Butibori	Chargaon	Muradpur	325 PF	N20.49.04.3	E 79.05.39.6
		1 ha		1.55	Nagpur	Nagpur	Butibori	Chargaon	Muradpur	342 PF	N 20.47.60.0	E79.05.41.6
		1 ha		1.55	Nagpur	Nagpur	Butibori	Chargaon	Surabardi	313 PF	N 20.84.23.98	E 79.08.54.23
		1 ha		1.55	Nagpur	Nagpur	Butibori	Butibori East	Dongargaon	Sarve No-13	N 20.90.50.39	E 79.03.82.61
		1 ha		1.55	Nagpur	Nagpur	Butibori	Butibori East	Dongargaon	Sarve No-13	N20.90.50.39	E 79.03.82.61
		1 ha		1.55	Nagpur	Nagpur	Butibori	Butibori East	Dongargaon	Sarve No-13	N20.90.50.39	E 79.03.82.61
		1 ha		1.55	Nagpur	Nagpur	Butibori	Butibori East	Dongargaon	Sarve No-13	N20.90.50.39	E79.03.82.61
		1 ha		1.55	Nagpur	Nagpur	Butibori	Butibori East	Vadgaon	Sarve No-19	N 20.48.41.35	E 79.01.40.79
		1 ha		1.55	Nagpur	Nagpur	Butibori	Butibori East	Vadgaon	Sarve No-20 . 29	N 20.48.43.24	E 79.01.40.98

Works proposed					Location of work						Latlong	
Rule No.	**Item of work**	**Quantity**	**Rate**	**Amount (Rs. in Lakhs**	**Circle**	**Division**	**Range**	**Round**	**Beat**	**Comartments No**	**Latitude**	**Longitude**
1	2	3	4	5	6	7	8	9	10	11	12	13
i	Encrochment Removal & Forest Protection	1 ha		1.55	Nagpur	Nagpur	Butibori	Butibori East	Vadgaon	Sarve No-19	N 20.48.42.20	E 79.01.39.76
		1 ha		1.55	Nagpur	Nagpur	Butibori	Butibori East	Vadgaon	Sarve No-20	N 20.48.45.22	E 79.01.42.25
		1 ha		1.55	Nagpur	Nagpur	Butibori	Butibori East	Butibori	Sarve No-21	N 20.92.11.34	E78.96.63.75
		1 ha		1.55	Nagpur	Nagpur	Butibori	Butibori East	Sonegaon	Sarve No-60	N 20.87.50.59	E78.93.53.65
		9 ha		0.82	Nagpur	Nagpur	Hingna	Pendhari	Kajali	175 PF	N 20 57 07 .93	E 078 46 07 .46
		1 ha		0.09	Nagpur	Nagpur	Hingna	Pendhari	Pendhari	167 PF	N 20 57 07 .93	E 078 46 07 .46
		1 ha		0.09	Nagpur	Nagpur	Hingna	Kawdas	Kawdas	163 PF	N 20 59 39.9	E 078 49 23.8
		6 ha		0.54	Nagpur	Nagpur	Hingna	Sawangi Deoli	Degma Khu	170 PF	N 20 00 00.3	E 078 51 24.7
		20 ha		1.81	Nagpur	Nagpur	Hingna	Hingna	Hingna	16 ZJ	N 21 03 39 .90	E 078 59 14.71
		7 ha		0.64	Nagpur	Nagpur	Hingna	Umariwagh	Umariwagh	775 RP	N 21 03 07.55	E 078 48 08.91
		11 ha		1.00	Nagpur	Nagpur	Hingna	Hingna	Mohagaon	1 ZJ	N 21 06 18.58	E 078 52 28.79
		23 ha		2.09	Nagpur	Nagpur	Hingna	Umariwagh	Umariwagh	153 PF	N 21 04 48.77	E 078 47 06.09
		1 ha		0.09	Nagpur	Nagpur	Hingna	Hingna	Ambazari	168 PF	N 21 03 08.19	E 078 49 53.90
		3 ha		0.27	Nagpur	Nagpur	Hingna	Pendhari	Itewahi	14 ZJ	N 20 57 41.7	E 078 50 24.3
		8 ha		0.73	Nagpur	Nagpur	Hingna	Kanholibara	Saoli	177 PF	N 20 53 07.0	E 078 49 11.0
		14 ha		1.27	Nagpur	Nagpur	Hingna	Kanholibara	Saoli	188 PF	N 20 53 07.0	E 078 49 11.0
		3 ha		0.28	Nagpur	Nagpur	Hingna	Pendhari	Itewahi	185 PF	N 20 57 41.7	E 078 50 24.3
		3 ha		0.28	Nagpur	Nagpur	Hingna	Pendhari	Itewahi	174 PF	N 20 57 41.7	E 078 50 24.3
		1 ha		2.00	Nagpur	Nagpur	Khapa	Khubala	Khubala	ZJ 13	N E 21. 28.28	E 78 58 42
		1 ha		2.00	Nagpur	Nagpur	Khapa	Kelwad	Kelwad	ZJ 17	N 21. 26 25 34	E 78 58 11 90
		1 ha		2.00	Nagpur	Nagpur	Khapa	Khubala	Kothurna	ZJ 55	N 21. 27 27 16 33	E 79 03 59 34
		1 ha		2.00	Nagpur	Nagpur	Khapa	Kelwad	Kelwad	ZJ 15	N 21. 27 26 30 61	E 78 58 12 05
	Nagpur Division Total	**162**		**118.05**								
	Encrochment Removal in new Zudpi RF area wardha range	25.00		30.00	Nagpur	Wardha	Wardha	wardha			N 20'74'15	E 78'60'99
	Wardha Division Total	**25.00**		**30.00**								
	Nagpur Circle Total	**187.00**		**148.05**								

Works proposed					Location of work						Latlong	
Rule No.	**Item of work**	**Quantity**	**Rate**	**Amount (Rs. in Lakhs**	**Circle**	**Division**	**Range**	**Round**	**Beat**	**Comartments No**	**Latitude**	**Longitude**
1	2	3	4	5	6	7	8	9	10	11	12	13
5 (2) (D) ii	**servey demarcation & fencing of sensitive forest areas**											
	Protection Camp Dhaga Chainlink	125.00		1.90	Nagpur	Wardha	Kharangana	Masod	Masod (E)	214 RF	N-21'01'03	E-78'28'15
	Chenlink Fencing -Around Pimpalkhuta Office	550.00		7.00	Nagpur	Wardha	Arvi	Pimpalkhuta			N-20 57 34	E-78 21 52
	Masod Chainlink	100.00		1.50	Nagpur	Wardha	Kharangana	Masod	Masod (E)	214 RF	N-20'58'46	E-78'28'15
	Central Nursery Fencing	LS		10.00	Nagpur	Wardha	Wardha	Wardha	Wardha		N 20'74'15	E 78'60'99
	Inchrochment Place Fencing	4.29		9.50	Nagpur	Wardha	wardha	wardha	sindhi meghe	survey no 158	N 20'41'26	E 78'36'45
		6.89		12.00	Nagpur	Wardha	wardha	wardha	sindhi meghe	survey no 157	N 20'41'27	E 78'36'46
		0.35		1.00	Nagpur	Wardha	wardha	wardha	sindhi meghe	survey no 156	N 20'41'28	E 78'36'47
		13.46		13.00	Nagpur	Wardha	wardha	wardha	Satoda	survey no 188	N 20'41'29	E 78'36'48
		6.31		12.00	Nagpur	Wardha	wardha	wardha	Mahakal	Survey no 11	N 20'41'30	E 78'36'49
		9.4		12.00	Nagpur	Wardha	wardha	wardha	Nalwadi	Survey no 26/2	N 20'41'31	E 78'36'50
		3		6.00	Nagpur	Wardha	wardha	wardha	Borgav meghe	Survey no 62	N 20'41'32	E 78'36'51
		3.02		6.00	Nagpur	Wardha	wardha	wardha	warud	Survey no 308, 307	N 20'41'30	E 78'36'49
		7.29		10.00	Nagpur	Wardha	wardha	wardha	warud	Survey no 285/2	N 20'41'30	E 78'36'49
		1.14		3.00	Nagpur	Wardha	wardha	wardha	sewagram	survey no 54	N 20'41'27	E 78'36'46
		0.09		1.50	Nagpur	Wardha	wardha	wardha	Nalwadi	Survey no 105	N 20'41'32	E 78'36'51
		0.79		3.00	Nagpur	Wardha	wardha	wardha	Kharangna gode	survey no 107	N 20'41'27	E 78'36'46
	Wardha Division Total	**831.03**		**109.40**								
	Nagpur Circle Total	**831.03**		**109.40**								

Works proposed					Location of work						Latlong	
Rule No.	**Item of work**	**Quantity**	**Rate**	**Amount (Rs. in Lakhs**	**Circle**	**Division**	**Range**	**Round**	**Beat**	**Comartments No**	**Latitude**	**Longitude**
1	2	3	4	5	6	7	8	9	10	11	12	13
iii	Boundry Pillar Class I	625	0.08	50	Nagpur	Nagpur	Khondhali	Ahmadnagar, Kondhali,	Khapri, Murli,Amhadn	65,68 252, 57, 58, 60, 6,		
		250	0.08	20	Nagpur	Nagpur	Butibori	ButiboriE,	Wadgaon, Butibori	19, 20, 29, 21	N 20 48 41 35 N 20 48 43 24	E 79 01 40 79 E 79 01 40 98
		60	0.08	4.8	Nagpur	Nagpur	Hingna	kanholibara	savli	188	N 20 56 07 0	E 78 49 11 0
		60	0.08	4.8	Nagpur	Nagpur	Hingna	Kavdas	dhabha	292	N 21 2 42 6	E 78 47 34 6
		60	0.08	4.8	Nagpur	Nagpur	Hingna	Pendhari	Khapakhori	786	N 20 58 60 0	E 78 46 10 4
		3	0.08	0.24	Nagpur	Nagpur	Khapa	Khubala	Khubala	209	N 21 48 59 68	E 079 00 792
		3	0.08	0.24	Nagpur	Nagpur	Khapa	Khubala	Khubala	717	N 21 43 37 98	E 079 01 292
		6	0.08	0.48	Nagpur	Nagpur	Khapa	Khubala	Khubala	210	N 21 48 13 73	E 079 02 39 97
		3	0.08	0.24	Nagpur	Nagpur	Khapa	Khubala	Khubala	211	N 21 43 99 48	E 079 01 99 5
		6	0.08	0.48	Nagpur	Nagpur	Khapa	Khubala	Khubala	212	N 21 43 68 6	E 079 01 48 02
		4	0.08	0.32	Nagpur	Nagpur	Khapa	Khubala	kothurna	216	N 21 46 72 48	E 079 05 74 6
		6	0.08	0.48	Nagpur	Nagpur	Khapa	Khubala	Badegaon	208	N 21 30 36	E 078 57 50
		1994	0.08	159.52	Nagpur	Nagpur	S.Hills	S.Hills	S.Hills	715		
	Nagpur Division Total	**3080**		**246.40**								
	Boundry Pillar Class I	1250.00	0.08	100.00	Nagpur	Wardha	All Range					
	Wardha Division Total	**1250.00**		**100.00**								
iii	Boundry Pillar Class I	46	0.08	3.68	Nagpur	Gondia	Tirora	Tirora	mundikotha	226,92,570,540,537,538,539,	N 21 19 46	E 79 19 46
		11	0.08	0.88	Nagpur	Gondia	Tirora	Wadegaon	kodelohara	308,310,zj	N 21 19 44	E 79 53 42
		11	0.08	0.88	Nagpur	Gondia	Tirora	Wadegaon	Bhajepar	67,pf	N 21 17 48	E 79 53 16
		70	0.08	5.6	Nagpur	Gondia	Tirora	Wadegaon	Lonara	878 zj,373 pf,	N 21 17 40	E 79 50 13
		10	0.08	0.8	Nagpur	Gondia	Tirora	Govindtola	Govindtola	4,9,10,17,zj	N 21 21 54	E 80 03 25
		158	0.08	12.64	Nagpur	Gondia	Tirora	Tirora	Tirora	209/2,210,211, 649/2,669,674,	N 21 25 48	E 79 53 48
		63	0.08	5.04	Nagpur	Gondia	Tirora	Tirora	mundikotha	69,70,71,90 T0 93,101,78	N 21 22 51	E 79 54 17

Works proposed					Location of work						Latlong	
Rule No.	**Item of work**	**Quantity**	**Rate**	**Amount (Rs. in Lakhs**	**Circle**	**Division**	**Range**	**Round**	**Beat**	**Comartments No**	**Latitude**	**Longitude**
1	2	3	4	5	6	7	8	9	10	11	12	13
iii	Boundry Pillar Class I	123	0.08	9.84	Nagpur	Gondia	Tirora	Tirora	Bondrani	552,550/1,336, 754,503,502,5	N 21 28 60	E 79 57 36
		100	0.08	8	Nagpur	Gondia	Chichgarh	Kadikasa	Pawani	1396	N-20.52.489	E-80.25.057
		6	0.08	0.48	Nagpur	Gondia	Chichgarh	Kadikasa	Dongargaon	1399	N-20.86.816	E-80.39.744
		44	0.08	3.52	Nagpur	Gondia	Chichgarh	Kadikasa	Dongargaon	1398	N-20.86.816	E-80.39.744
		7	0.08	0.56	Nagpur	Gondia	Chichgarh	Kadikasa	Dongargaon	1258	N-20.88.784	E-80.42.097
		17	0.08	1.36	Nagpur	Gondia	Chichgarh	Kadikasa	Dongargaon	1255	N-20.52.485	E-80.25.057
		10	0.08	0.8	Nagpur	Gondia	Gothangaon	Rajoli	Ilada	738	N-20.42.21	E-80.11.17
		68	0.08	5.44	Nagpur	Gondia	Gothangaon	Tirkhuri-1	Tirkhuri-1	156, 286, 266, 1373	N-20.69.13	E-80.25.60
		21	0.08	1.68	Nagpur	Gondia	Gothangaon	Tirkhuri-2	Dongargaon	1032	N-20.44.54,	E-80.11.46
		32	0.08	2.56	Nagpur	Gondia	Gothangaon	Gothangaon	Jambhdi/G-1	782, 746	N-20.79.02	E-80.17.11
		34	0.08	2.72	Nagpur	Gondia	Gothangaon	Gothangaon	Gothangaon	744, 747	N-20.48.43	E-80.08.22
		11	0.08	0.88	Nagpur	Gondia	Gothangaon	Tirkhuri-2	Nagandoh-4		N-20.44.71,	E-80.17.46
		55	0.08	4.4	Nagpur	Gondia	Gothangaon	Tirkhuri-1	Saygaon-1	1372, 141	N-20.71.39	E-80.27.83
		10	0.08	0.8	Nagpur	Gondia	Gothangaon	Rajoli	Parastola	753	N-20.42.20	E-80.09.46
		18	0.08	1.44	Nagpur	Gondia	Gothangaon	Gothangaon	Pratapgad	231	N-20.47.41	E-80.07.24
		11	0.08	0.88	Nagpur	Gondia	Gothangaon	Gothangaon	Tukumnaryan	974	N-20.75.11	E-80.15.00
	Gondia Division Total	**936**		**74.88**								
iii	Boundry Pillar Class I	70	0.08	5.60	Nagpur	Bhandara	Nakadongari	Bagheda	Garra	Gat No 244,317,46,34	N- 21.29080	E- 79.39664
		27	0.08	2.16	Nagpur	Bhandara	Nakadongari	Bagheda	Garra	Gat No 244,317,346,3	N 21.29268 N 21.29332	E 079.38988, E 79.39707
		45	0.08	3.60	Nagpur	Bhandara	Nakadongari	Bagheda	Garra	Gat No 244,317,346,3	N-21.29268 N 21.29332	E-079.38988, E 79.39707
		10	0.08	0.80	Nagpur	Bhandara	Nakadongari	Bagheda	Garra	14 PF	N-21.295040	E-079.391896
		72	0.08	5.76	Nagpur	Bhandara	Nakadongari	Bagheda	Garra	14 PF	N-21.294553	E-079.390175
		10	0.08	0.80	Nagpur	Bhandara	Nakadongari	Bagheda	Garra	14 PF	N- 21.497647 N 21.285877	E- 079.671786 E 079.411862

Works proposed					Location of work						Latlong	
Rule No.	**Item of work**	**Quantity**	**Rate**	**Amount (Rs. in Lakhs**	**Circle**	**Division**	**Range**	**Round**	**Beat**	**Comartments No**	**Latitude**	**Longitude**
1	2	3	4	5	6	7	8	9	10	11	12	13
iii	Boundry Pillar Class I	21	0.08	1.68	Nagpur	Bhandara	Nakadongari	Nakadongari	Pavnarkhari -1	360 RF	N-21.324915 , N 21.325412	E-079.436261, E 79.44082
		24	0.08	1.92	Nagpur	Bhandara	Nakadongari		Pavnarkhari -2	359 RF	N-21.312949 N 21.310653	E-079.411213, E 79.41482
		41	0.08	3.28	Nagpur	Bhandara	Nakadongari		Nakadongari -1	02 PF	N-21.341762	E-079.415899
		148	0.08	11.84	Nagpur	Bhandara	Lakhani	Jambhali	Bardkinhi	118,117,120,117, 34,107	N 21º02.676 N21º02.647	E 079º53.677 E 079º58'21"
		106	0.08	8.48	Nagpur	Bhandara	Lakhani	Jambhali	Nlagondi	105, 110, 115, 116	N21º14'41" N21º02.850	E079º83'41" E079º52.364
		44	0.08	3.52	Nagpur	Bhandara	Lakhani	Jambhali	Mundipar	119.112.114.113	N 21º6.43 N 21º02.676	E079º57.18 E079º53.677
		44	0.08	3.52	Nagpur	Bhandara	Lakhani	Rampuri	Rampuri	12,11,22,123	N20º59'41"08	E079º54'00"
		100	0.08	8.00	Nagpur	Bhandara	Lendezari	Vitpur	Vitpur-I	56RF	N-21.484'601"	E-079.617'271"
		13	0.08	1.04	Nagpur	Bhandara	Tumasar	Hardoli	Sonegaon-2	1,23,151	N 21.26.466	E 79.48.248
		7	0.08	0.56	Nagpur	Bhandara	Tumasar	Hardoli	Sonegaon-2	49	N 21.27.202	E 79.49.235
		10	0.08	0.80	Nagpur	Bhandara	Tumasar	Bapera	Sondya-2	23,36/2	N 21.29.48.96	E 79.54.04.30
		10	0.08	0.80	Nagpur	Bhandara	Tumasar	Bapera	Sondya-2	44,15,32,616	N 21.29.01.23	E 79.54.55.13
		10	0.08	0.80	Nagpur	Bhandara	Tumasar	Bapera	Sondya-2	329, 330, 331, 334	N 21.28.49.14	E 79.54.39.09
		10	0.08	0.80	Nagpur	Bhandara	Tumasar	Bapera	Sondya-2	7,01,702	N 21.30.46.44	E 79.55.17.22
		20	0.08	1.60	Nagpur	Bhandara	Tumasar	Bapera	Sondya-2	112,113,114,116,118,11,9,45	N 21.30.46.88	E 79.53.24.32
		15	0.08	1.20	Nagpur	Bhandara	Tumasar	Bapera	Sondya-2	211,212,243,247,	N 21.31.25.26	E 79.51.43.56
		10	0.08	0.80	Nagpur	Bhandara	Tumasar	Bapera	Sondya-2	276,	N 21.30.21.46	E 79.52.34.23
		10	0.08	0.80	Nagpur	Bhandara	Tumasar	Bapera	Sondya-2	28,4,5,3,2,9,10,36/1,40,44	N 21.30.41.75	E 79.52.51.74
		25	0.08	2.00	Nagpur	Bhandara	Tumasar	Bapera	Sondya-2	249,250,	N 21.30.04.32	E 79.51.30.34
		25	0.08	2.00	Nagpur	Bhandara	Tumasar	Bapera	Sondya-2	5,06,27,327	N 21.31.30.76	E 79.81.09.76
		83	0.08	6.64	Nagpur	Bhandara	Tumasar	Bapera	Sondya-2	67,26	N 21.20.9047	E 79.42.328
		14	0.08	1.12	Nagpur	Bhandara	Jamkanddri	Rampur	Gaimukh	357	N 21.27'20.80"	E 79.37'44.03"
	Bhandara Division Total	**1024**		**81.92**								
	Nagpur Circle Total	**6290**		**503.20**								

Works proposed					Location of work						Latlong	
Rule No.	**Item of work**	**Quantity**	**Rate**	**Amount (Rs. in Lakhs**	**Circle**	**Division**	**Range**	**Round**	**Beat**	**Comartments No**	**Latitude**	**Longitude**
1	2	3	4	5	6	7	8	9	10	11	12	13
iv	Boundry Pillar Class II	2	0.04	0.08	Nagpur	Nagpur	Khapa	khubala	khubala	209	N 21 48 54 57	E 079 00 99. 32
		6	0.04	0.24	Nagpur	Nagpur	Khapa	khubala	khubala	210	N 21 48 02 05	E 079 02 33.55
		3	0.04	0.12	Nagpur	Nagpur	Khapa	khubala	khubala	211	N 21 43 96 85	E 079 01 13
		6	0.04	0.24	Nagpur	Nagpur	Khapa	khubala	khubala	212	N 21 43 63 88	E 079 01 38 35
		3	0.04	0.12	Nagpur	Nagpur	Khapa	khubala	kothurna	216	N 21 46 70 43	E 079 05 295
		8	0.04	0.32	Nagpur	Nagpur	Khapa	khubala	Badegaon	208	N 21 30 32	E 078 57 50
	Nagpur Division Total	**28**		**1.12**								
	Boundry Pillar Class I I	100.00	0.04	4.00	Nagpur	Wardha	Karanja	Sindhivihiri	Sindhivihiri	172, 173, 174 PF	N 21 03.467,	E 78 33.689
	Wardha Division Total	**100.00**		**4.00**								
iv	Boundry Pillar Class I I	52	0.04	2.08	Nagpur	Gondia	Tirora	Tirora	mundikotha	226,92,570,540,537,538,539,	N 21 19 46	E 79 19 46
		3	0.04	0.12	Nagpur	Gondia	Tirora	Wadegaon	kodelohara	308,310,zj	N 21 19 44	E 79 53 42
		13	0.04	0.52	Nagpur	Gondia	Tirora	Wadegaon	Bhajepar	67,pf	N 21 17 48	E 79 53 16
		63	0.04	2.52	Nagpur	Gondia	Tirora	Wadegaon	Lonara	878 zj,373 pf,	N 21 17 40	E 79 50 13
		18	0.04	0.72	Nagpur	Gondia	Tirora	Govindtola	Govindtola	4,9,10,17,zj	N 21 21 54	E 80 03 25
		100	0.04	4	Nagpur	Gondia	Tirora	Tirora	Tirora	209/2,210,211, 649/2,669,674,	N 21 25 48	E 79 53 48
		64	0.04	2.56	Nagpur	Gondia	Tirora	Tirora	mundikotha	69,70,71,90 T0 93,101,78	N 21 22 51	E 79 54 17
		126	0.04	5.04	Nagpur	Gondia	Tirora	Tirora	Bondrani	552,550/1,336, 754,503,502,5	N 21 28 60	E 79 57 36
		90	0.04	3.6	Nagpur	Gondia	Chichgarh	Kadikasa	Pawani	1396	N-20.52.489	E-80.25.057
		20	0.04	0.8	Nagpur	Gondia	Chichgarh	Kadikasa	Dongargaon	1399	N-20.86.816	E-80.39.744
		135	0.04	5.4	Nagpur	Gondia	Chichgarh	Kadikasa	Dongargaon	1398	N-20.86.816	E-80.39.744
		11	0.04	0.44	Nagpur	Gondia	Chichgarh	Kadikasa	Dongargaon	1258	N-20.88.744	E-80.42.097
		12	0.04	0.48	Nagpur	Gondia	Chichgarh	Kadikasa	Dongargaon	1255	N-20.88.784	E-80.42.097
		16	0.04	0.64	Nagpur	Gondia	Gothangaon	Rajoli	Ilada	738	N-20.42.21	E-80.11.17
		60	0.04	2.4	Nagpur	Gondia	Gothangaon	Tirkhuri-1	Tirkhuri-1	156, 286, 266, 1373	N-20.69.13	E-80.25.60
		16	0.04	0.64	Nagpur	Gondia	Gothangaon	Tirkhuri-2	Dongargaon	1032	N-20.44.54,	E-80.11.46
		32	0.04	1.28	Nagpur	Gondia	Gothangaon	Gothangaon	Jambhdi/G-1	782, 746	N-20.79.02	E-80.17.11
		33	0.04	1.32	Nagpur	Gondia	Gothangaon	Gothangaon	Gothangaon	744, 747	N-20.48.43	E-80.08.22
		16	0.04	0.64	Nagpur	Gondia	Gothangaon	Tirkhuri-2	Nagandoh-4		N-20.44.71,	E-80.17.46

Works proposed					Location of work						Latlong	
Rule No.	**Item of work**	**Quantity**	**Rate**	**Amount (Rs. in Lakhs**	**Circle**	**Division**	**Range**	**Round**	**Beat**	**Comartments No**	**Latitude**	**Longitude**
1	2	3	4	5	6	7	8	9	10	11	12	13
iv	Boundry Pillar Class I I	57	0.04	2.28	Nagpur	Gondia	Gothangaon	Tirkhuri-1	Saygaon-1	1372, 141	N-20.71.39	E-80.27.83
		13	0.04	0.52	Nagpur	Gondia	Gothangaon	Rajoli	Parastola	753	N-20.42.20	E-80.09.46
		20	0.04	0.8	Nagpur	Gondia	Gothangaon	Gothangaon	Pratapgad	231	N-20.47.41	E-80.07.24
		13	0.04	0.52	Nagpur	Gondia	Gothangaon	Gothangaon	Tukumnaryan	974	N-20.75.11	E-80.15.00
	Gondia Division Total	**983**		**39.32**								
iv	Boundry Pillar Class II	13	0.04	0.52	Nagpur	Bhandara	Nakadongari	Bagheda	Garra	16 PF	N-21.301669	E-079.415534
		25	0.04	1.00	Nagpur	Bhandara	Nakadongari	Bagheda	Garra	14 PF	N-21.295040	E-079.391896
		17	0.04	0.68	Nagpur	Bhandara	Nakadongari	Chicholi South	Karli -1	Gat No 21,22,23,46,11	N-21.294553	E-079.390175
		14	0.04	0.56	Nagpur	Bhandara	Nakadongari	Chicholi South	Karli -1	83 RF	N- 21.293828	E- 079.405903
		20	0.04	0.80	Nagpur	Bhandara	Nakadongari	Nakadongari	Pavnarkhari -1	360 RF	N-21.324915,	E-079.436261,
		8	0.04	0.32	Nagpur	Bhandara	Nakadongari	Nakadongari	Pavnarkhari -2	359 RF	N-21.312949,	E-079.411213,
	Bhandara Division Total	**97**	**0.24**	**3.88**								
	Nagpur Circle Total	**1208**		**48.32**								
V	Construction, upgradation and maintenance of Protection Camps/Protection Huts Forest Custy/Labour Shed ect.											
	Protection Huts	1	20	20	Nagpur	Gondia	Gothangaon	Tirkhuri-2	Nagandoh-1	250	N-20.75.10,	E-80.25.60
		1	20	20	Nagpur	Gondia	Gondia	Gangazari	Dandagaon	pf.45	N.21.23.66.	E.80.03.21
		1	20	20	Nagpur	Gondia	Goregaon	Goregaon	Asalpani	400	N-21.20.58	E-80.05.35
		1	20	20	Nagpur	Bhandara	Adyal	Kitadi	kitadi-1	Beat Kitadi-1	N 20.59'04.51'	E-79.39'49'47
		1	20	20	Nagpur	Bhandara	Nakadongari	Bagheda	Pangadi	34 PF	N-21.27.808	E-079.37.106
		1	20	20	Nagpur	Bhandara	Paoni	Sawarla	Sawarla	312	N-20.42.1	E-079.42.48
		1	20	20	Nagpur	Bhandara	Paoni	Amagaon	Nisthi	324	N-20.45.59	E-079.36.27
	Total	**7**		**140**								
	Construction Forest Custody	1	23	23	Nagpur	Bhandara	Bhandara	Bhandara	Shahapur	P.N.16	N- 21.09'36"	E-079.39'10"
	Nagpur Circle Total	**8**		**163.00**								

Works proposed					Location of work						Latlong	
Rule No.	**Item of work**	**Quantity**	**Rate**	**Amount (Rs. in Lakhs**	**Circle**	**Division**	**Range**	**Round**	**Beat**	**Comartments No**	**Latitude**	**Longitude**
1	2	3	4	5	6	7	8	9	10	11	12	13
	Strengthening the wireless messaging system	1.00		1.50	Nagpur	Wardha	Karanja	Garpit	Garpit	-	N 21 03 54.2,	E 78 22 59.8
		1.00		1.50	Nagpur	Wardha	Karanja	Bangadapur	Nadora	-	N 21 04 21.6,	E 78 30 40.3
		1.00		1.50	Nagpur	Wardha	Karanja	karanja	Karanja (S.)	-	N 21 09 36.7,	E 78 24 38.8
		1.00		1.50	Nagpur	Wardha	Karanja	Dhanoli	Dhanoli	-	N 21 03 32.5,	E 78 36 18.4
	Wardha Division Total	**4.00**		**6.00**								
5(2)(d) v	Improving mobility of frontline staff for forest protection & patrolling.	LS		2	Nagpur	Nagpur						
		LS		2	Nagpur	Wardha						
		LS		2	Nagpur	Gondia						
		LS		2	Nagpur	Bhandara						
	Nagpur Circle Total			**8.00**								
				985.97								
5(2)(f)	Forest fire Prevention and control operations											
i	cutting and buring of fire lines											
	Fire Line- Kondhali Range	150		7.2	Nagpur	Nagpur	Kondhali	Chameli	Chameli	25 RF	N 21 14 56	E 78 68 54
					Nagpur	Nagpur	Kondhali	Chameli	Chameli	26 RF	N 21 14 48	E 78 68 47
					Nagpur	Nagpur	Kondhali	Chameli	Chameli	27 RF	N 21 14 48	E 78 68 48
					Nagpur	Nagpur	Kondhali	Chameli	Garamsur	15 RF	N 21 14 27	E 78 68 48
					Nagpur	Nagpur	Kondhali	Chameli	Garamsur	16 RF	N 21 14 54	E 78 68 52
					Nagpur	Nagpur	Kondhali	Chameli	Garamsur	31 RF	N 21 14 78	E 78 68 03
					Nagpur	Nagpur	Kondhali	Mendhepathar	Sonpur	24 RF	N 21 11 00	E 78 42 00
					Nagpur	Nagpur	Kondhali	Mendhepathar	Vajbodi	123 PF	N 21 23 65	E 78 71 12
					Nagpur	Nagpur	Kondhali	Dorli	Murli	130 PF	N 21 1 33 11	E 78 15 36 15
					Nagpur	Nagpur	Kondhali	Dorli	Murli	136 PF	N 21 14 29.73	E 078 43 33 61
					Nagpur	Nagpur	Kondhali	Dorli	Murli	139 PF	N 21 12 27	E 78 45 24
					Nagpur	Nagpur	Kondhali	Dorli	Kotvanbardi	17 RF	N 21 12 32 21	E 078 03.72
					Nagpur	Nagpur	Kondhali	Ahmadnabar	Murti	62 RF	N 21 18 42	E 78 55 67
					Nagpur	Nagpur	Kondhali	Ahmadnabar	Murti	61 RF	N 21 18 42	E 78 55 67

Works proposed					Location of work						Latlong	
Rule No.	**Item of work**	**Quantity**	**Rate**	**Amount (Rs. in Lakhs**	**Circle**	**Division**	**Range**	**Round**	**Beat**	**Comartments No**	**Latitude**	**Longitude**
1	2	3	4	5	6	7	8	9	10	11	12	13
	Fire Line- Parshioni Range	50		2.4	Nagpur	Nagpur	Parshioni	Parshioni	Bhagemaheri	233 RF	N 21 24 41	E 79 6 45
					Nagpur	Nagpur	Parshioni	Parshioni	Kodasavali	726 A RF	N 21 25 09	E 79 7 58
					Nagpur	Nagpur	Parshioni	Parshioni	Kodasavali	726 B RF	N 21 25 42	E 79 7 35
					Nagpur	Nagpur	Parshioni	Parshioni	Peth Parsodi	238 A RF	N 21 12 18.22	E 79 14 118
					Nagpur	Nagpur	Parshioni	Parshioni	Peth Parsodi	238 B RF	N 21 44 46 22	E 79 13 4 75
					Nagpur	Nagpur	Parshioni	Parshioni	Kanhadevi	615 B PF	N 21 25 74 1	E 079 05 51 9
					Nagpur	Nagpur	Parshioni	Parshioni	Tekadi	225 PF	N 21 27 50 4	E 079 06 44 8
					Nagpur	Nagpur	Parshioni	Parshioni	Tekadi	239 PF	N 21 27 53 9	E 079 04 53 5
					Nagpur	Nagpur	Parshioni	Parshioni	Pendhari	226 PF	N 21 25 720	E 079 05 540
		9.60		**9.60**								
i	Cutting and Burning of fire line	3.59		0.29	Nagpur	Wardha	Talegaon	Sarwadi	Kinhala	131 RF	N-21°05'50.7"	E 078°14'39.2"
		7.04		0.56	Nagpur	Wardha	Talegaon	Pardi	Ajanadevi	99 RF	N-21°21'133"	E 078°19'317"
		5.20		0.42	Nagpur	Wardha	Talegaon	Talegaon	Shindivihira	125 RF	N-21°9'31.1"	
		14.08		1.13	Nagpur	Wardha	Talegaon	Malegaon	Malegaon	132 RF	N-21°04'44.7"	E 078°17'19.6"
		3.20		0.26	Nagpur	Wardha	Talegaon	Wardhmaneri	Wardhmaneri	138 RF	N-21°02'20.2"	E 078°14'57.4"
		8.75		0.42	Nagpur	Wardha	Samudrapur	Girad	Shivanfal	319, 318	N 20.602089	E 79.140324
		16.15		0.96	Nagpur	Wardha	Samudrapur	Girad	Khursapr	316 RF	N 20.678684	E 79.08646
		6.46		0.52	Nagpur	Wardha	Samudrapur	Girad	Girad	314, 315 RF	N 20.669829	E 79.068479
		10.71		0.86	Nagpur	Wardha	Samudrapur	Kora	Khek	321, 322	N 20.5078	E 79.1396
		11.24		0.59	Nagpur	Wardha	Samudrapur	Girad	Girad	3,29,330	N 20.60303	E 79.18793
		26.00		1.25	Nagpur	Wardha	Kharangana	Kharangana	Morangana	193 PF	N-20'55'00	E-78'27'00
		26.00		1.25	Nagpur	Wardha	Ashti	Pilapur	Khanapur	7,8,9,10 PF	N 21.290'331	E 78.129'579
		111.25		3.09	Nagpur	Wardha	Arvi	Arvi, Wadhona, Rohna, Pimpalkhuta, Bramhanwada			N-20.999435	E-78.227279
		127.59		6.55	Nagpur	Wardha	Arvi				N-20.999435 \	E-78.227279
		1.36		0.15	Nagpur	Wardha	Karanja	Garpit	Garpit	181, 182 RF	N 21 04 27.8,	E 078 23 41.0
		0.75		0.1	Nagpur	Wardha	Karanja	Garpit	Garpit	181 RF	N 21 04 37.0,	E 078 23 23.9
		0.82		0.1	Nagpur	Wardha	Karanja	Garpit	Garpit	181 RF	N 21 04 53.3,	E 078 22 37.3

Works proposed					Location of work						Latlong	
Rule No.	**Item of work**	**Quantity**	**Rate**	**Amount (Rs. in Lakhs**	**Circle**	**Division**	**Range**	**Round**	**Beat**	**Comartments No**	**Latitude**	**Longitude**
1	2	3	4	5	6	7	8	9	10	11	12	13
i	Cutting and Burning of fire line	1.10		0.1	Nagpur	Wardha	Karanja	Garpit	Garpit	181 RF	N 21 04 09.1,	N 21 04 09.1,
		2.40		0.25	Nagpur	Wardha	Karanja	Garpit	Garpit	181 RF	N 21 04 13.2,	E 078 22 17.6
		2.80		0.28	Nagpur	Wardha	Karanja	Garpit	Garpit	181 RF	N 21 04 29.2,	E 078 22 22.4
		1.10		0.1	Nagpur	Wardha	Karanja	Garpit	Dhamkund (E.)	178 RF	N 21 04 12.8,	E 078 22 17.6
		1.60		0.15	Nagpur	Wardha	Karanja	Garpit	Dhamkund (E.)	180, 181 RF	N 21 04 59.1,	E 078 21 58.0
		2.60		0.25	Nagpur	Wardha	Karanja	Garpit	Dhamkund (W.)	152, 153, 154 RF	N 21 04 01.7,	E 078 21 47.6
		1.50		0.17	Nagpur	Wardha	Karanja	Garpit	Dhamkund (Madhya)	145 RF	N 21 02 39.5	E 078 19 48.6
		3.00		0.26	Nagpur	Wardha	Karanja	karanja	Dhawsa	192 RF	N 21 04.786,	E 078 25.146
		2.30		0.22	Nagpur	Wardha	Karanja	karanja	Linga	184 RF	N 21 04.445,	E 078 25.307
		12.50		1.1	Nagpur	Wardha	Karanja	karanja	Linga	132 PF	N 21 04.512,	E 078 24.224
		1.80		0.2	Nagpur	Wardha	Karanja	Sindhivihiri	Yenidodka	47, 48 RF	N 21 01.477,	E 078 34.044
		2.10		0.2	Nagpur	Wardha	Karanja	Sindhivihiri	Yenidodka	48 RF	N 21 01.482,	E 078 34.058
		1.70		0.18	Nagpur	Wardha	Karanja	Sindhivihiri	Yenidodka	48 RF	N 21 02.572,	E 078 34.042
		2.40		0.26	Nagpur	Wardha	Karanja	Sindhivihiri	Ambhora	223 RF	N 21 03.583,	E 078 31.402
		3.20		0.32	Nagpur	Wardha	Karanja	Sindhivihiri	Ambhora	223 RF	N 21 03.583,	E 078 31.402
		1.10		0.12	Nagpur	Wardha	Karanja	Sindhivihiri	Ambhora	224 RF	N 21 01.791,	E 078 32.135
	Wardha Division Total	423.39		**22.66**								
i	Cutting and burning of fire lines	6	0.4	0.40	Nagpur	Gondia	Nawegaon Depot	Nawegaon Depot	Nawegaon Depot	1273	N-20.54.57,	E-80.06.10.0
		44	1.94	1.94	Nagpur	Gondia	Gothangaon	Keshori	Ambhora-2	264	N-20.41.22,	E-80.07.55
		37	1.63	1.63	Nagpur	Gondia	Gothangaon	Rajoli	Junewani-1	327	N-20.41.34,	E-80.12.30
		48	2.1	2.10	Nagpur	Gondia	Gothangaon	Tirkhuri-1	Tirkhuri-3	340	N-20.43.56,	E-80.18.16
		66	2.9	2.90	Nagpur	Gondia	Gothangaon	Tirkhuri-2	Tirkhuri-2	345	N-20.45.323,	E-80.16.04
		6.4	0.15	0.15	Nagpur	Gondia	Gothangaon	Gothangaon	Tukumnarayn	325	N-20.43.43,	E-80.11.54
		12.7	0.31	0.31	Nagpur	Gondia	Gothangaon	Tirkhuri-2	Tirkhuri-2	345	N-20.46.41,	E-80.18.50
	Gondia Division Total	**220.1**		**9.43**								

Works proposed					Location of work						Latlong	
Rule No.	**Item of work**	**Quantity**	**Rate**	**Amount (Rs. in Lakhs**	**Circle**	**Division**	**Range**	**Round**	**Beat**	**Comartments No**	**Latitude**	**Longitude**
1	2	3	4	5	6	7	8	9	10	11	12	13
i	Cutting and burning of fire lines	LS		1.00	Nagpur	Bhandara	Bhandara	Bhandara	Shahapur	9	N- 21.09'36"	E-79.39'10"
		LS		1.00	Nagpur	Bhandara	Bhandara	Davadipar	Khapa	286RF	N- 21.05'11"	E-79.41'18"
		LS		1.00	Nagpur	Bhandara	Nakadongari	Nakadongari	Nakadongari-1	1 pf	N- 21.2342706"	E-079.079 44 06"
		LS		1.00	Nagpur	Bhandara	Lakahndur	Pimplgaon koka	Tdka-5	267 & 268 RF	N- 20.453994"	E-79.551188"
		LS		1.00	Nagpur	Bhandara	Lakhani	Lakhani	Gadegaon	315,448 ZJ	N- 21.098.204"	E-79.789472"
		LS		1.00	Nagpur	Bhandara	Sakoli	Sangadi W	Sangadi-2	405/4,5,173,302 PF	N- 20.57 '396"	E-79.58 742"
		LS		1.00	Nagpur	Bhandara	Tumser	Tumser	Zanzeria	74RF	N- 21.26'33.90"	E-079.44 53 81"
		LS		1.00	Nagpur	Bhandara	Jamkandri	Jamkandri	Deolgaon	45 RF	N- 21.2539 85"	E-079.315449"
		LS		1.00	Nagpur	Bhandara	Lendezari	Vitpur	Devnara	62	N- 21.54' 12.19"	E-079.64 44 61"
		LS		1.00	Nagpur	Bhandara	Adyal	Adyal	Adyal	305PF	N- 20.97'69 64"	E-079.68'993"
	Bhandara Division Total			**10.00**								
	Nagpur Circle Total	**653.09**		**51.69**								
ii	fire Watchers											
	2 Fire watchers/beat From 1st April to 15 June= 67 days	55	@400/per days/PM	15.00	Nagpur	Nagpur	All ranges	-	-	-	-	-
	Nagpur Division Total	**55**		**15.00**								
ii	Fire Watcher (Mandays) (1 April 2022 To 15 June 2022) & (15 Febu 2023 To 31 March 2023)	5		4.58	Nagpur	Wardha	Talegaon	Talegaon, Malegaon Kali, Sarwadi, Pardi, Wardhamaneri		129 RF	N-21.106388	E-78.204102
		4		3.66	Nagpur	Wardha	Samudrapur	Samudrapur, Girad, Mangual, Kora		326 RF	N-20.634371	E-78.954604
		5		4.58	Nagpur	Wardha	Kharangana	Borkhedi, Kharangana, Masod, Bangdapur, Borgaon Gondi,		-	N-20.915496	E-78.463835
		5		4.58	Nagpur	Wardha	Ashti	Ashti, Pilapur, Sahur, Manikwada, Pandhurna		-	N-21.201028	E-78.189096
		5		4.58	Nagpur	Wardha	Arvi	Arvi, Wadhona, Rohna, Pimpalkhuta, Bramhanwada			N-20.999435	E-78.227279
		4		5.49	Nagpur	Wardha	Wardha	Wardha, Hinganghat, Pulgaon, Wadner		215 PF	N-20.741094	E-78.610828
		5		4.58	Nagpur	Wardha	Hingani	Kelzar, Navargaon, Seloo, Zadshi, Hingani			N-20.911910	E-78.714426
		6		5.49	Nagpur	Wardha	Karanja	Bangadapur (Heti), Sindhivihiri, Dhanoli,karanjam,		55 RF, 176 PF	N-21.160175	E-78.410628
	Wardha Division Total	**39**		**37.54**								

Works proposed					Location of work						Latlong	
Rule No.	**Item of work**	**Quantity**	**Rate**	**Amount (Rs. in Lakhs**	**Circle**	**Division**	**Range**	**Round**	**Beat**	**Comartments No**	**Latitude**	**Longitude**
1	2	3	4	5	6	7	8	9	10	11	12	13
ii	Fire watchers	4	1.78	1.78	Nagpur	Gondia	Chichgarh	Chichgarh				
		5	2.22	2.22	Nagpur	Gondia	Chichgarh	Kadikasa				
		5	2.22	2.22	Nagpur	Gondia	Chichgarh	Wadekasa				
		5	2.22	2.22	Nagpur	Gondia	Chichgarh	Piparkhari				
		5	2.22	2.22	Nagpur	Gondia	Chichgarh	Kakodi				
		6	2.66	2.66	Nagpur	Gondia	Chichgarh	Magardoh				
		6	2.66	2.66	Nagpur	Gondia	Chichgarh	Palandur				
	Gondia Division Total	**36**		**15.98**								
	Total	**130**		**68.52**								
				120.21								
5(2)(g)	**Soil and moisture conservation works in the forest**											
i	Construction of Gabiyan Bandhara	1	0.5	**0.50**	Nagpur	Nagpur	Kondhali	Ghubadi	Ghubadi	106 PF	N 21 08 35	E 078 69 13
		1	0.5	**0.50**	Nagpur	Nagpur	Kondhali	Ghubadi	Malkapur	114 115 PF	N 21 08 35	E 078 69 13
		1	0.5	**0.50**	Nagpur	Nagpur	Kondhali	Ghubadi	Kinkiddhoda	87, 88 PF	N 21 08 35	E 078 69 13
		1	0.5	**0.50**	Nagpur	Nagpur	Kondhali	Mendhepathar	Mendhepathar	83 PF	N 21 10 12	E 078 38 34
		1	0.5	**0.50**	Nagpur	Nagpur	Kondhali	Mendhepathar	Mendhepathar	101 PF	N 21 15 23	E 078 42 26
		1	0.5	**0.50**	Nagpur	Nagpur	Kondhali	Mendhepathar	Wajbodi	123 PF	N 21 41 3	E 078 42 26
		1	0.5	**0.50**	Nagpur	Nagpur	Kondhali	Mendhepathar	Wajbodi	124 PF	N 21 14 13	E 078 42 26
		1	0.5	**0.50**	Nagpur	Nagpur	Kondhali	Kondhali	Sirmi	69 PF	N 21 7 36	E 078 37 25
	Nagpur Division Total	**8**		**4.00**								

Works proposed					Location of work						Latlong	
Rule No.	**Item of work**	**Quantity**	**Rate**	**Amount (Rs. in Lakhs**	**Circle**	**Division**	**Range**	**Round**	**Beat**	**Comartments No**	**Latitude**	**Longitude**
1	2	3	4	5	6	7	8	9	10	11	12	13
5(2)(g)	Construction of Gabiyan Bandhara	5.00	0.5	2.50	Nagpur	Wardha	Talegaon	Sarwadi	Bambarda	72 PF	N-21˚8’ 44"	E 078˚ 15' 5”
		5.00	0.5	2.50	Nagpur	Wardha	Talegaon	Pardi	Botona	104 RF	N-21˚231026"	E 078˚ 305426
		5.00	0.5	2.50	Nagpur	Wardha	Kharangana	Bagdapur	Aajndoh (N)	196 RF	N-21'05'20	E-78'27'28
		5.00	0.5	2.50	Nagpur	Wardha	Ashti	Ashti	Thar	42 PF	N 21.11'36	E 78.13'41
		5.00	0.5	2.50	Nagpur	Wardha	Hingni	Hingni	Nanbardi	239 PF	N 20.55.31.0	E 078.39.54.0
		5.00	0.5	2.50	Nagpur	Wardha	Hingni	Zadshi	Tamswada II	261 RF	N 20.53.25	E 078.04.23
		5.00	0.5	2.50	Nagpur	Wardha	Wardha	Wardha	Anji	215 PF	N 20'87'23	E 78'50'47
		5.00	0.5	2.50	Nagpur	Wardha	Karanja	karanja	Dhawsa	192 RF	N 21 05 0.30	E 78 25 4.42
		5.00	0.5	2.50	Nagpur	Wardha	Karanja	Garpit	Dhamkund	152 RF	N 21 04 00.6,	E 78 29 02.0
		5.00	0.5	2.50	Nagpur	Wardha	Karanja	Sindhivihiri	Markasur	175 PF	N 21 00 57.8,	E 78 32 55.4
	Total	**50.00**		**25.00**								
i	Construction of Gabiyan Bandhara	5	0.5	2.50	Nagpur	Gondia	Tirora	Govindtola	Ghoti	Ghoti 368 RF	N-21.33.35.	E.80.04.31
		1	0.5	0.50	Nagpur	Gondia	Gothangaon	Gothangaon	Pratapgad	231	N-20.47.78,	E-80.7.29
		1	0.5	0.50	Nagpur	Gondia	Gothangaon	Gothangaon	Tukumnarayan	727-A	N-20.74.16,	E-80.11.89
		1	0.5	0.50	Nagpur	Gondia	Gothangaon	Tirkhuri-1	Saygaon-1	845	N-20.41.96,	E-80.13.40
		1	0.5	0.50	Nagpur	Gondia	Gothangaon	Tirkhuri-1	Tirkhuri-2	335	N-20.43.49,	E-80.27.06
		1	0.5	0.50	Nagpur	Gondia	Gothangaon	Rajoli	Junewani-2	780	N-20.43.49	E-80.11.57
		1	0.5	0.50	Nagpur	Gondia	Chichgarh	Magardoh	Ghoghara-2	787	N-20.79.553,	E-80.20.961
		1	0.5	0.50	Nagpur	Gondia	Chichgarh	Magardoh	Ghoghara-2	787	N-20.79.152,	E-80.21.078
		1	0.5	0.50	Nagpur	Gondia	Chichgarh	Magardoh	Ghoghara-2	787	N-20.79.595	E-80.20.983
		1	0.5	0.50	Nagpur	Gondia	Chichgarh	Magardoh	Ghoghara-2	787	N-20.79.161,	E-80.21.959
		1	0.5	0.50	Nagpur	Gondia	Chichgarh	Magardoh	Ghoghara-2	787	N-20.78.868,	E-80.20.873
		1	0.5	0.50	Nagpur	Gondia	Chichgarh	Magardoh	Ghoghara-2	787	N-20.78.923,	E-80.20.856
		1	0.5	0.50	Nagpur	Gondia	Chichgarh	Magardoh	Ghoghara-2	787	N-20.79.193,	E-80.21.116
		1	0.5	0.50	Nagpur	Gondia	Chichgarh	Magardoh	Ghoghara-2	787	N-20.79.576,	E-80.20.980
		1	0.5	0.50	Nagpur	Gondia	Chichgarh	Magardoh	Ghoghara-2	787	N-20.79.544,	E-80.20.958
		1	0.5	0.50	Nagpur	Gondia	Chichgarh	Magardoh	Ghoghara-2	787	N-20.52.489,	E-80.25.057
		1	0.5	0.50	Nagpur	Gondia	Chichgarh	Kadikasa	Pawani	1396	N-20.52.564,	E-80.25.053
		1	0.5	0.50	Nagpur	Gondia	Chichgarh	Kadikasa	Pawani	1396	N-20.52.421,	E-80.25.072
	Gondia Division Total	**22**		**11.00**								

Works proposed					Location of work						Latlong	
Rule No.	**Item of work**	**Quantity**	**Rate**	**Amount (Rs. in Lakhs**	**Circle**	**Division**	**Range**	**Round**	**Beat**	**Comartments No**	**Latitude**	**Longitude**
1	2	3	4	5	6	7	8	9	10	11	12	13
i	Construction of Gabiyan Bandhara	1	0.50	0.50	Nagpur	Bhandara	Bhandara	Madgi (w)	Rawanwadi	287 RF	N- 21.03'39"	E-079.43'59"
		1	0.50	0.50	Nagpur	Bhandara	Bhandara	Madgi (w)	Khurshipar	184 PF	N- 21.02'19"	E-079.44'50"
		1	0.50	0.50	Nagpur	Bhandara	Bhandara	Madgi (w)	MadgiII	288RF	N- 21.00'48"	E-079.46'13"
		1	0.50	0.50	Nagpur	Bhandara	Bhandara	Koka	Saleheti	96 PF	N- 21.10'02"	E-079.49'54"
		1	0.50	0.50	Nagpur	Bhandara	Nakadongari	Nakadongari	Nakadonhari - 1	02 PF	N-21.334627	E-079.415900
		1	0.50	0.50	Nagpur	Bhandara	Nakadongari	Chicholi South	Pavnara	364 RF	N-21.271620	E-079.425440
		1	0.50	0.50	Nagpur	Bhandara	Nakadongari	Chicholi South	karli -1	83 RF	N-21.291816	E-079.414711
		1	0.50	0.50	Nagpur	Bhandara	Lakhandur	Pimpalgaon/ko.	New Dhabetekadi	266	N 20 46.430	E 079 52.801
		1	0.50	0.50	Nagpur	Bhandara	Lakhandur	Pimpalgaon/ko.	Tidka 2	276	N 20 46.486	E 079 53.793
		1	0.50	0.50	Nagpur	Bhandara	Lakhandur	Pimpalgaon/ko.	Tidka 3	275	N 20 46.499	E 079 53.834
		1	0.50	0.50	Nagpur	Bhandara	Lakhandur	Pimpalgaon/ko.	Tidka 4	274	N 20 46.543	E 079 53.971
		1	0.50	0.50	Nagpur	Bhandara	Lakhani	Jambhali	Baradkinhi	117 PF	N21º02.850	E079º52.364
		1	0.50	0.50	Nagpur	Bhandara	Lakhani	Umarzari	Sonegaon	92 PF	N21º11'32.62	E079º51'28.85
		1	0.50	0.50	Nagpur	Bhandara	Lakhani	Lakhani	Lakhani	106 PF	N21º14'41"	E079º83'41"
		1	0.50	0.50	Nagpur	Bhandara	Lakhani	Umarzari	Sonegaon	92 PF	N21º11'14.30"	E079º51'21.93"
		1	0.50	0.50	Nagpur	Bhandara	Lendezari	Vitpur	Vitpur-I	56RF	N-21.483'865"	E-079.618'335"
		1	0.50	0.50	Nagpur	Bhandara	Lendezari	Vitpur	Garra-I	61RF	N-21.321'390"	E-079.390'132"
		1	0.50	0.50	Nagpur	Bhandara	Lendezari	Rongha	Khapa-I	28PF	N-21.320'108"	E-079.340'424"
		1	0.50	0.50	Nagpur	Bhandara	Tumsar	Hardoli	Chulardoh	72	N*21.28.520	E79.46.083
		1	0.50	0.50	Nagpur	Bhandara	Jamkandri	Lohara	Sorna	53	N-21.26.05.92	E-79.34.42.79
	Bhandara Division Total	**20**		**10.00**								
	Total Gabian Bandhara	**100.00**		**50.00**								
	SMC Work- CNB	1.00	15	15.00	Nagpur	Wardha	Arvi	Bramhanwada	Panjara East	175 RF	N 21 01 51	E 78 24 51
		1.00	15	15.00	Nagpur	Wardha	Arvi	Bramhanwada	Garpit (W)	185 RF	N 21 04 89	E 78 41 10
	Wardha Division Total	**2.00**		**30.00**								

Works proposed					Location of work						Latlong	
Rule No.	**Item of work**	**Quantity**	**Rate**	**Amount (Rs. in Lakhs**	**Circle**	**Division**	**Range**	**Round**	**Beat**	**Comartments No**	**Latitude**	**Longitude**
1	2	3	4	5	6	7	8	9	10	11	12	13
ii	Construction of Cement Bandhare	1	15	15.00	Nagpur	Gondia	Navegaon Bandh	Pauni	Pauni	225RF	N 20.53.103	E 080.10.4805
		1	15	15.00	Nagpur	Gondia	Navegaon Bandh	Navegaon Bandh	Chingi-1	213RF	N 20.58.37.03	E 080.06.11.18
		1	15	15.00	Nagpur	Gondia	Chichgarh	Magardoh	Ghogara 2	789	N20°47'236"	E80°14'877"
		1	15	15.00	Nagpur	Gondia	Chichgarh	Piparkhari	Piparkhari 3	636	N20°49'15"	E80°22'54"
		1	15	15.00	Nagpur	Gondia	Gothangaon	Gothangaon	Jambhali Ga. 2	783A	N-20° 77' 92	E-80°17' 20
		1	15	15.00			Gothangaon	Gothangaon	Jambhali Ga. 1	925	N-20° 77' 35	E-80°18' 77
		1	15	15.00	Nagpur	Gondia	Tirora	Govindtola	Mangezari	108 RF (16m)	N-21.21.26	E 80. 03' 52"
	Gondia Division Total	**7**		**105.00**								
	Total Cement Bandhara	**9.00**		**135.00**								
iv	**Creation of Forest ponds/Vantale/Khodtadi**											
	SMC Work--Van Talav	1.00	3	3.00			Hingni	Hingni	Nanbardi	239/1 PF	N 20.55.32.0	E 078.39.56.0
		1.00	3	3.00			Hingni	Seloo	Sindhi R	S.No. 75	N 20.49.05	E 078.52.28
		1.00	3	3.00			Hingni	Seloo	Sindhi R	S.No. 76/1	N 20.49.10	E 078.52.27
		1.00	3	3.00			Hingni	Seloo	Sindhi R	S.No. 73	N 20.47.01	E 078.44.26
		1.00	3	3.00			Kharangana	Bagdapur	Aajndoh (N)	198 RF	N-21'04'37	E E-78'28'26
		1.00	3	3.00			Kharangana	Borgaon Gondi	Susund (N)	226 RF	N-20'59'09	E-78'31'08
		1.00	3	3.00			Kharangana	Borgaon Gondi	Saheli	199 PF	N-20'55'12	E-78'25'54
		1.00	3	3.00			Arvi	Arvi	Lahadevi	89/1 PF	N 20 58 07	E 78 58 20
		1.00	3	3.00			Arvi	Arvi	Sawlapur	86 PF	N 21 00 17	E 78 16 50
		1.00	3	3.00			Arvi	Arvi	Arvi	141 RF	N 21 20 26	E 78 17 19
		1.00	3	3.00			Arvi	Wadhona	Hivra	136 PF	N 21 02 50	E 78 22 50
		1.00	3	3.00			Wardha	Wadner	Allipur	377/1	N 20'34'15	E 78'41'37
		1.00	3	3.00			Wardha	Wadner	Wadner	291	N 20'25'01	E 78'47'31
		1.00	3	3.00			Wardha	Wadner	Wadner	322	N 20'29'25	E 78'47'49
		1.00	3	3.00			Wardha	Wadner	Kangav	253	N 20'24'21	E 78'63'39
		1.00	3	3.00			Wardha	Wadner	Kangav	132	N 20'31'19	E 78'59'05
		1.00	3	3.00			Wardha	Wadner	Wadner	110	N 20'26'10	E 78'40'16
		1.00	3	3.00			Wardha	Wadner	Allipur	34	N 20'32'19	E 78'45'20
		1.00	3	3.00			Wardha	Wadner	Allipur	1	N 20'33'19	E 78'42'24
		1.00	3	3.00			Wardha	Wadner	Wadner	249	N 20'29'19	E 78'46'39
	Total	**20.00**		**60.00**								

Works proposed					Location of work						Latlong	
Rule No.	**Item of work**	**Quantity**	**Rate**	**Amount (Rs. in Lakhs**	**Circle**	**Division**	**Range**	**Round**	**Beat**	**Comartments No**	**Latitude**	**Longitude**
1	2	3	4	5	6	7	8	9	10	11	12	13
	Forest Tank	1	3	3.00	Nagpur	Gondia	Tirora	Tirora	Bondrani	879 ZJ	N.21.31.11.	E.79.57.32
		1	3	3.00	Nagpur	Gondia	Tirora	Wadegaon	Lonara	71 PF	N.21.16.13	E.79.54.03
	Khodtadi	1	3	3.00	Nagpur	Gondia	Gothangaon	Rajoli	IIada	838	N-20.42.21,	E-80.11.17
		1	3	3.00	Nagpur	Gondia	Gothangaon	Rajoli	Junewani-2	780	N-20.43.59,	E-80.12.56
		1	3	3.00	Nagpur	Gondia	Gothangaon	Tirkhuri-11	Nagandoh-4	260	N-20.45.2,	E-80.15.21
		1	3	3.00	Nagpur	Gondia	Narth / Deori	Bhagi	Murdoli	18, 569	N-21.05.05.90	E-80.18.51.41
		1	3	3.00	Nagpur	Gondia	Narth / Deori	Bhagi	Murdoli	18, 569	N-21.05.08.83	E-80.18.45.04
	Gondia Division Total	**7**	**21.00**	**21.00**								
	Total	**27.00**		**81.00**								
5(2)(g)	SMC Work- Deep CCT	15.00		6.00			Arvi	Arvi	Sarangpuri N	83/2 PF	N 21 01 54	E 78 15 32
		15.00		6.00			Arvi	Arvi	Lahadevi	89/3 PF	N 20 58 08	E 78 17 57
		5.00		2.00			Arvi	Wadhona	Panjara Gondi	Svy. 17	N 20 58 54	E 78 21 24
		10.00		4.00			Arvi	Wadhona	Panjara Gondi	Svy. 86	N 20 58 60	E 78 21 80
		5.00		2.00			Arvi	Rohna	Panjara Bothali	147/1 PF	N 20 53 44	E 78 20 22
		5.00		2.00			Arvi	Pimpalkhuta	Pimpalkhuta	158 RF	N 20 57 20	E 78 20 11
		10.00		4.00			Arvi	Pimpalkhuta	Danapur	169 RF	N 20 58 23	E 78 24 47
		1.00		0.40			Arvi	Arvi	Sarangpuri N	83/3 PF	N 21 0049	E 78 15 47
		8.00		1.84			Hingni	Seloo	Sindhi R	S.No. 22/2	N 20.45.33	E 078.50.05
		7.00		1.47			Hingni	Seloo	Sindhi R	S.No. 22/2	N 20.45.04	E 078.50.34
	Total	**81.00**		**29.71**								
vi	Earthan/Mati Nala Bumds	1	3.00	3.00	Nagpur	Gondia	Arjuni/Mor	Arjuni	Butai-1	755	N.20.46.24,	E.80.50.94.
		1	3.00	3.00	Nagpur	Gondia	Arjuni/Mor	Arjuni	Butai-1	755	N.20.46.21.2,	E.80.52.00.91.
		1	3.00	3.00	Nagpur	Gondia	Arjuni/Mor	Mahagaon	Mahurkuda	754	N.20.46.49.5,	E.80.52.78.4.
		1	3.00	3.00	Nagpur	Gondia	Arjuni/Mor	Arjuni	Mahurkuda	754	N.20.46.33.8,	E.80.58.76.3.
		1	3.00	3.00	Nagpur	Gondia	Gothangaon	Gothangaon	Gothangaon	744	N-20° 48' 57	E-80°8' 4
		1	3.00	3.00	Nagpur	Gondia	Gothangaon	Gothangaon	Tukumnarayan	250	N-20° 74' 84	E-80° 18' 17
		1	3.00	3.00	Nagpur	Gondia	Gothangaon	Gothangaon	Jambhali Ga. 2	783B	N-20° 79' 02	E-80° 17' 11
	Gondia Division Total	**7**		**21.00**	Nagpur	Gondia						
	Nagpur CircleTotal	**224.00**		**316.71**								

Works proposed					Location of work						Latlong	
Rule No.	**Item of work**	**Quantity**	**Rate**	**Amount (Rs. in Lakhs**	**Circle**	**Division**	**Range**	**Round**	**Beat**	**Comartments No**	**Latitude**	**Longitude**
1	2	3	4	5	6	7	8	9	10	11	12	13
Wildlife Management & Man-animal Conflict mitigation												
5(2)(H)	**Wildlife mitigation measures**											
Improvement of wildlife habitat as provided in the approved wildlife management plan or working plan												
5(2)(I) (i)	All Wildlife Management works like Rejuvenation of lakes & rivers, Medow development , Creation & maintenance of water sources/water holes for wildlife, Eradication of invasive species etc. will be carred out as per approved Management plan											
	Eradication of Invasive species	1	0.09	0.09	Nagpur	Nagpur	Kondhali	Kondhali	Nandora	-	N 21 08 11	E 078 38 38
		5	0.09	0.45	Nagpur	Nagpur	Kondhali	Kondhali	Kondhali	-	N 21 73 0	E 078 69 29
		5	0.09	0.45	Nagpur	Nagpur	Kondhali	chubadi	chubadi	-	N 21 08 49	E 078 69 29
		5	0.09	0.45	Nagpur	Nagpur	Kondhali	Chameli	Chameli	-	N 21 14 56	E 078 68 54
		5	0.09	0.45	Nagpur	Nagpur	Kondhali	Ahamadnagar	Ahamadnagar	-	N 21 18 42	E 078 55 67
		5	0.09	0.45	Nagpur	Nagpur	Kondhali	Darali	Darali	-	N 21 15 50	E 078 43 34
		10	0.09	0.90	Nagpur	Nagpur	Kalmeshwar	Kalmeshwar	Linga	9 RF	N 21 11 34	E 78 49 32
		40	0.09	3.60	Nagpur	Nagpur	Kalmeshwar	Kalmeshwar	Linga	192 PF	N 21 13 06	E 078 51 0.1
		10	0.09	0.90	Nagpur	Nagpur	Kalmeshwar	Kalmeshwar	Nimji	191 PF	N 21 11 06	E 078 50 11
		15	0.09	1.35	Nagpur	Nagpur	Kalmeshwar	Kalmeshwar	Nimji	7 RF	N 21 10 22 \	E 078 51 0.2
		15	0.09	1.35	Nagpur	Nagpur	Kalmeshwar	Kalmeshwar	Nimji	6 RF	N 21 10 31	E 078 51 027
		30	0.09	2.70	Nagpur	Nagpur	Kalmeshwar	Bazargaon	Dhankund	719 A NRF	N 21 7 30	E 078 49 027
		50	0.09	4.50	Nagpur	Nagpur	Kalmeshwar	Bazargaon	Bazargaon	12 RF	N 21 7 30	E 078 49 027
		15	0.09	1.35	Nagpur	Nagpur	Kalmeshwar	Bazargaon	Satnaori	144 PF	N 2111 56	E 078 48 09
		60	0.09	5.40	Nagpur	Nagpur	Katol	Katol	Khutamba	66, 67 RF	N 21 11 50	E 079 34 7
		70	0.09	6.30	Nagpur	Nagpur	Katol	Isapur	Lokholi	99 PF	N 21 17 06	E 078 42 15
		50	0.09	4.50	Nagpur	Nagpur	Katol	Isapur	Sonkhamb	120 PF	N 21 18 05	E 078 43 36
		30	0.09	2.70	Nagpur	Nagpur	Parseoni	Pethparsodi	Salai	153, 180	N 21 25 08.6	E 079 10 52.2
		30	0.09	2.70	Nagpur	Nagpur	Parseoni	Pethparsodi	Pethparsodi	238 a PF	N 21 43 135	E 79 14 83 63
		30	0.09	2.70	Nagpur	Nagpur	Parseoni	Pethparsodi	Pethparsodi	238 B PF	N 21 43 71 09	E 79 15 07 55

Works proposed					Location of work						Latlong	
Rule No.	**Item of work**	**Quantity**	**Rate**	**Amount (Rs. in Lakhs**	**Circle**	**Division**	**Range**	**Round**	**Beat**	**Comartments No**	**Latitude**	**Longitude**
1	2	3	4	5	6	7	8	9	10	11	12	13
	Eradication of Invasive species	50	0.09	4.50	Nagpur	Nagpur	Paoni	Salai	Mogarkasa	439	N 21 29 54	E 79 28 20
		50	0.09	4.50	Nagpur	Nagpur	Paoni	Chpourbahuli	Mogara	270	N 21 28 46	E79 19 48
		117	0.09	10.53	Nagpur	Nagpur	North Umred	Lohara deoli	Dongargaon Lohara-1 lohara-2 Pipaldol Bhivgad	371' 340, 341 RF	N 20 83 21.35 N20 49 00	E079 12 12.95 E 079 15 00
		120	0.09	10.80	Nagpur	Nagpur	South Umred	Nandra Botezari	Bidmohana Malewada Mahalgaon	777 coupe NO 2 421 PF	N 20 46 00 N 20 42 58 N 20 38 24	E 079 13 09 E 079 20 06 E 079 14 40
		55	0.09	4.95	Nagpur	Nagpur	Butibori	amghat	Amghat-3	395 RF	N 20 76 90.06	E 79 12 02.90
		60	0.09	5.40	Nagpur	Nagpur	Butibori	amghat	Amghat-3	396 RF	N 20 78 51 38	E79 11 49.48
		40	0.09	3.60	Nagpur	Nagpur	Butibori	amghat	Amghat-3	388 RF	N 20 79 00.83	E79 16 89.28
		55	0.09	4.95	Nagpur	Nagpur	Butibori	amghat	Amghat-3	385 RF	N 20 78 88.57	E 79 17 78.10
		30	0.09	2.70	Nagpur	Nagpur	Butibori	amghat	amgha-1	394 RF	N 20 46 50.2	E 79 08 19.8
		25	0.09	2.25	Nagpur	Nagpur	Butibori	amghat	amgha-1	392 RF	N 20 46 81.3	E 79 08 58.9
		5	0.09	0.45	Nagpur	Nagpur	Butibori	amghat	Kohala	326 PF	N 20 79 32.99	E 79 09 32.57
		15	0.09	1.35	Nagpur	Nagpur	Butibori	amghat	Kohala	398 RF	N 20 78 23.57	E 79 08 78.79
		20	0.09	1.80	Nagpur	Nagpur	Butibori	amghat	Kohala	397 RF	N 20 79 06.28	E 79 10 38.16
		25	0.09	2.25	Nagpur	Nagpur	Butibori	amghat	Shedeshwar	354 PF	N 20 44 14	E 79 08 16
		15	0.09	1.35	Nagpur	Nagpur	Butibori	amghat	BoriManjara	345 PF	N 20 45 54	E 79 07 04
		10	0.09	0.90	Nagpur	Nagpur	Butibori	amghat	BoriManjara	315 PF	N 20 75 16.2	E 79 06 10.74
		80	0.09	7.20	Nagpur	Nagpur	Butibori	Chargaon	Muradpur	344 RF	N 20 48 28.60	E 79 07 15.43
		30	0.09	2.70	Nagpur	Nagpur	Butibori	Chargaon	Muradpur	343 PF	N 20 48 19.56	E 79 06 35.30
		50	0.09	4.50	Nagpur	Nagpur	Hingna	Ambazari	Ambazari-2	797	N 21 07 20	E79 00 42
		100	0.09	9.00	Nagpur	Nagpur	Khapa	Khubala	Badegaon	-	N 21 29 3	E 078 58 23
		1	0.09	0.09	Nagpur	Nagpur	S.Hills	S.Hills	Seminary Hills	715	N 21 18 26 41	E 079 10 66 14
		50	0.09	4.50	Nagpur	Nagpur	Ramtek	Mansar	Mansar	249 PF	N 21 43 00	E79 25 04
	Nagpur Division Total 5(2)(I)	**1484.00**		**133.56**								

Works proposed					Location of work						Latlong	
Rule No.	**Item of work**	**Quantity**	**Rate**	**Amount (Rs. in Lakhs**	**Circle**	**Division**	**Range**	**Round**	**Beat**	**Comartments No**	**Latitude**	**Longitude**
1	2	3	4	5	6	7	8	9	10	11	12	13
9	**Lantina Removal P/Ha 18 M.d * 440=7920**	20.00	0.0792	1.58	Nagpur	Wardha	Talegaon	Talegaon	Shindivihira	125 RF	N-21°10’ 18"	E 078° 13' 29”
		50.00	0.0792	3.96	Nagpur	Wardha	Talegaon	Pardi	Pardi S.	102 PF	N-21°12’ 55"	E 078° 18' 09”
		40.00	0.0792	3.17	Nagpur	Wardha	Talegaon	Pardi	Botona	105 RF	N-21°22’ 06.75"	E 078° 28' 25.18”
		10.00	0.0792	0.79	Nagpur	Wardha	Kharangana	Bangdapur	Bangdapur (W)	220 RF	N-21'06'77 \	E-78'49;50
		30.00	0.0792	2.38	Nagpur	Wardha	Kharangana	Kharangana	Morangana	193 PF	N-20'54'27	E-78'27'25
		50.00	0.0792	3.96	Nagpur	Wardha	Kharangana	Kharangana	Panwadi	145 PF	N-20'54'22	E-78'25'07
		20.00	0.0792	1.58	Nagpur	Wardha	Ashti	Pilapur	Sujatpur	18 PF	N 21'23'2162	E 78'15'3605
		20.00	0.0792	1.58	Nagpur	Wardha	Ashti	Ashti	Ashti	48 PF	N-21'12'5	E- 78'12'51
		25.00	0.0792	1.98	Nagpur	Wardha	Ashti	Pilapur	Pilapur (W)	11 PF	N 21.26'2756	E 78.12'373
		25.00	0.0792	1.98	Nagpur	Wardha	Ashti	Pandhrna	Porgvhan	118 RF	N 21'16'43	E 78'10'44
		30.00	0.0792	2.38	Nagpur	Wardha	Hingni	Navargaon	Garmsur	221/2	N 21.01.80	E 78.67.98
		15.00	0.0792	1.19	Nagpur	Wardha	Hingni	Zadshi	Tamswada II	261 RF	N 20.54.46	E 78.35.10
		20.00	0.0792	1.58	Nagpur	Wardha	Hingni	Hingni	Nanbardi	239 PF	N 20.55.23	E 078.40.24
		25.00	0.0792	1.98	Nagpur	Wardha	Arvi	Arvi	Lahadevi	89/1 PF	N 20 58 07	E 78 58 20
		25.00	0.0792	1.98	Nagpur	Wardha	Arvi	Arvi	Sarangpuri N	83/2 PF	N 21 01 54	E 78 15 32
		15.00	0.0792	1.19	Nagpur	Wardha	Arvi	Wadhona	Panjra Gondi W	177 RF	N 21 04 35	E 78 39 26
		15.00	0.0792	1.19	Nagpur	Wardha	Arvi	Bramhanwada	Khairwada	173 RF	N 21 02 20	E 78 25 02
		25.00	0.0792	1.98	Nagpur	Wardha	Arvi	Bramhanwada	Panjra E	174 RF	N 21 00 51	E 78 25 00
		25.00	0.0792	1.98	Nagpur	Wardha	Karanja	Dhanoli	Rahati	51, 52, 53 RF	N 21 05 00.5	E 78 33 54.9
		25.00	0.0792	1.98	Nagpur	Wardha	Karanja	Bangadapur	Hetikundi	161 PF	N 21 06 50.3	E 78 29 56.7
		25.00	0.0792	1.98	Nagpur	Wardha	Karanja	Sindhivihiri	Markasur	175 PF	N 21 1 10.00,	E 78 34 43.00
		40.00	0.0792	3.17	Nagpur	Wardha	Karanja	karanja	Linga	184 RF	N 21 05 15.6	E 78 24 25.3
	Wardha Division Total	**575.00**		**45.54**								

Works proposed					Location of work						Latlong	
Rule No.	**Item of work**	**Quantity**	**Rate**	**Amount (Rs. in Lakhs**	**Circle**	**Division**	**Range**	**Round**	**Beat**	**Comartments No**	**Latitude**	**Longitude**
1	2	3	4	5	6	7	8	9	10	11	12	13
5(2)(k)	**Establishment, Operation & Maintenance of Animal Rescue Centre and veterinary treatment facilities for wild animals**											
i	Establishment, Operation & Maintenance of Animal Rescue Centre /Transit Treatment Centre	-	-	35.00	Nagpur	Nagpur	RFO Rescue, S. Hills Nagpur	-	-	-	-	-
ii	veterinary treatment facilities for wild animals	-	-	45.00	Nagpur	Nagpur	RFO Rescue, S. Hills Nagpur	-	-	-	-	-
				3.00	Nagpur	Wardha	Wardha	wardha	wardha		N 20'74'15	E 78'60'99
iii	Animal Seinzing & capturing devices	-	-	34.15	Nagpur	Nagpur	RFO Rescue, S. Hills Nagpur	-	-	-	-	-
		-	-	9.60	Nagpur	Gondia						
iv	Rescue Emegency operation	-	-	25.00	Nagpur	Nagpur	RFO Rescue, S. Hills Nagpur	-	-	-	-	-
		-	-	1.00	Nagpur	Nagpur	Hingna	-	-	-	-	-
				2.00	Nagpur	Gondia						
v	Strenghting of Rapid rescue Teams	-	-	40.00	Nagpur	Nagpur	RFO Rescue, S. Hills Nagpur	-	-	-	-	-
				10.00	Nagpur	Gondia						
vi	Management of rewilding of tiger cubs	-	-	20.00	Nagpur	Nagpur	RFO Rescue, S. Hills Nagpur	-	-	-	-	-
	Nagpur Division Total			**224.75**								
				403.85								
	Grand Total for Activities under not less than 80% component			**3798.83**								
5(3)(d)	**Construction, up-gradation and maintenance of inspection paths, forest roads in forest area, fire lines, watch towers, check posts and timber depots**											
	Forest Road 5.00km	5	3.50	3.50	Nagpur	Gondia	Ghothangaon	Tirkhuri-2	Nagandoh	3,36,345	N-20.44.43	E-80.17.30
	Forest Road 5.00km	5	3.50	3.50	Nagpur	Gondia	Chichgarh	Chichgarh	Sukadi	648	N-20.49.15,	E-80.22.52
	Forest Road 2.00km	2	1.40	1.50	Nagpur	Gondia	Chichgarh	Piparkhari	Piparkhari-3	636	N-20.49.30	E-80.18.14
		12		**8.50**								

Works proposed					Location of work						Latlong	
Rule No.	**Item of work**	**Quantity**	**Rate**	**Amount (Rs. in Lakhs**	**Circle**	**Division**	**Range**	**Round**	**Beat**	**Comartments No**	**Latitude**	**Longitude**
1	2	3	4	5	6	7	8	9	10	11	12	13
	Causway	1.00		10.00	Nagpur	Wardha	Kharangana	Masod	Ladgad (N)	217 RF	N-21'01'07	E-78'29'56
		1.00		10.00	Nagpur	Wardha	Kharangana	Masod	Sonegaon (N)	184 PF	N-21'01'20	E-78'31'01
		1.00		10.00	Nagpur	Wardha	Kharangana	Masod	Sonegaon (N)	184 PF	N-21'01'17	E-78'31'07
		1.00		10.00	Nagpur	Wardha	Kharangana	Masod	Masod (N)	208 RF	N-21'01'18	E-78'26'37
		1.00		10.00	Nagpur	Wardha	Kharangana	Masod	Masod (N)	208 RF	N-21'01'28	E-78'26'49
		1.00		10.00	Nagpur	Wardha	Kharangana	Masod	Masod (N)	208 RF	N-21'02'11	E-78'27'12
		1.00		10.00	Nagpur	Wardha	Kharangana	Bangdapur	Bangdapur(S)	216 RF	N-21'01'20	E-78'30'26
		1.00		10.00	Nagpur	Wardha	Kharangana	Borkhedi	Bramhnwada (Rithi)	268 RF	N-20'56'52	E-78'31'43
		1.00		10.00	Nagpur	Wardha	Kharangana	Borkhedi	Bramhnwada (Rithi)	268 RF	N-21'16'87	E-78'52'55
		1.00		10.00	Nagpur	Wardha	Kharangana	Bangdapur	Aajndoh (S)	202 RF	N-21'04'03	E-78'27'43
		1.00		10.00	Nagpur	Wardha	Kharangana	Bangdapur	Aajndoh (S)	202 RF	N-21'07'22	E-78'46'78
		1.00		10.00	Nagpur	Wardha	Kharangana	Bangdapur	Aajndoh (S)	202 RF	N-21'06'87	E-78'46'16
		1.00		15.00	Nagpur	Wardha	Arvi	Arvi	Arvi	140 Rf	N 21 03 06	E 78 15 50
		1.00		15.00	Nagpur	Wardha	Arvi	Bramhanwada	Bramhanwada (N)	205, 203 RF	N 21 03 14	E78 26 50
		1.00		15.00	Nagpur	Wardha	Arvi	Bramhanwada	Garpit W	184 RF	N 21 01 58	E 78 24 11
		1.00		15.00	Nagpur	Wardha	Arvi	Wadhona	Chincholi	143 RF	N 21 03 20	E 78 17 05
	Wardha Division Total	**16.00**		**180.00**								
	Watch Tower	1	10.00	10.00	Nagpur	Gondia	Tirora	Indora	Pindkepar-1	369 RF	N.21.20.16.	E.80.01.05.
		1	10.00	10.00	Nagpur	Gondia	Sa./Arjuni	Regepar	Regepar-1	164 RF	N.21.5.45.4.	E.80.12.32.3
	Gondia Division Total	**2**	**20.00**	**20.00**								
5(3)(d)	Construction of watch towers	1	10.00	10.00	Nagpur	Bhandara	Bhandara	Madgi (w)	MadgiII	288RF	N- 21.00'48"	E-079.46'13"
	Construction of watch towers	1	10.00	10.00	Nagpur	Bhandara	Lakhani	Umarzari	Umarzari	292 PF	N 21 10 37	E 79 57 36
	Bhandara Division Total	**2**	**20.00**	**20.00**								
5(2)(d)	Check Post Naka Pandhurna	1.00	8.5	8.50			Ashti	Pandhurna	Pandhurna	123 RF	N 21.14.23	E 78.12.18
	Nagpur Circle Total	**33.00**		**237.00**								

Works proposed					Location of work						Latlong	
Rule No.	**Item of work**	**Quantity**	**Rate**	**Amount (Rs. in Lakhs**	**Circle**	**Division**	**Range**	**Round**	**Beat**	**Comartments No**	**Latitude**	**Longitude**
1	2	3	4	5	6	7	8	9	10	11	12	13
5(3)(e)	**Construction of residential & Official buildings in forest for front line staffs**											
i	Construction of Type - I Quarters for Forest Guards											
		1	22.00	22.00	Nagpur	Nagpur	Hingna	Hingna,	Mohagaon	-	N 21° 03'53.15"	E 78°51'50.12"
		1	22.00	22.00	Nagpur	Nagpur	Khapa	kelwad	kelwad	-	N 21 44 04	E 078 74 35
		2		**44.00**								
		1.00	22.00	22.00	Nagpur	Wardha	Talegaon	Talegaon	Talegaon	69 Z.J.	N-21˚6’ 439"	E 078˚ 11' 572”
		1.00	22.00	22.00	Nagpur	Wardha	Samudrapur	Kora	Kora	55	N 20.50899	E 79.106273
		2.00		**44.00**								
		1.00	22.00	22.00	Nagpur	Gondia	Sa./Arjuni	Jambhali	Dawwa	373	N.21.10.54	E.80.10.46
		1.00	22.00	22.00	Nagpur	Gondia	Ghothangaon	Kesori	Kesori	492	N-20.74.03,	E-80.12.73
		2.00		**44.00**								
		1	22.00	22.00	Nagpur	Bhandara	Bhandara	koka	Saleheti	26	N- 21.09'37"	E-79.39'12"
		1	22.00	22.00	Nagpur	Bhandara	Nakadongari	Kavlewada	Kavlewada	556	N-21.33491	E-079.48453
		2.00		**44.00**								
	Nagpur Circle Total Type I Qur.	**8.00**		**176.00**								
ii	Construction of Type - II Quarters											
		1	26.00	26.00	Nagpur	Nagpur	Hingna	Hingna,	Wanadongari		N 21°05'37.42"	E 78°58'25.60"
		1	26.00	26.00	Nagpur	Bhandara	Bhandara	Madgi (w)	madgi 1	288	N- 21.09'37"	E-79.39'12"
		1	26.00	26.00	Nagpur	Gondia	Goregaon	Goregaon	Goregaon	142	N.21.20.02.63	E-80.12.05.49
		1.00	26	26.00	Nagpur	Wardha	Wardha	Pulgaon	Pulgaon		N 20'43'25	E 78'20'35
	Nagpur Circle Total II Quarters	**4.00**		**104.00**								
iii	Construction of Type - III Quarters											
		1	36.00	36.00	Nagpur	Nagpur	Butibori	East Butibori	Dongargad	S. No. 3	N 20 58 47 3	E 79 01 37 8
		1	36.00	36.00	Nagpur	Gondia	Navegaon Bandh Depo	Navegaon Bandh Depo	Navegaon Bandh Depo	1273	N-20.54.57.5,	E-80.06.10.0
	Nagpur Circle Total III Quarters	**2**		**72.00**								

Works proposed					Location of work						Latlong	
Rule No.	**Item of work**	**Quantity**	**Rate**	**Amount (Rs. in Lakhs**	**Circle**	**Division**	**Range**	**Round**	**Beat**	**Comartments No**	**Latitude**	**Longitude**
1	2	3	4	5	6	7	8	9	10	11	12	13
iv	Contstruction of of Range office											
		1	45.00	45.00	Nagpur	Nagpur	Hingna	Hingna	Wanadongari	-	N 21 05 37.42	E 078 58 25 60
		1	45.00	45.00	Nagpur	Gondia	Navegaon Bandh	Navegaon Bandh	Navegaon Bandh	1035	N-20.54.606,	E-80.05.332
	Nagpur Circle Total Range Office	**2**		**90.00**								
v	Amenities for Woman Front Line Staff											
		1	14	14.00	Nagpur	Nagpur	Narkhed	Narkhed	Narkhed	Narkhed	N 21 28 12 98	E 78 30 59 17
		1.00	14	14.00	Nagpur	Wardha	Wardha	Wardha	Wardha		N 20'74'15	E 78'60'99
		1	14	14.00	Nagpur	Gondia	Gothangaon	Gothangaon	Gothangaon	744	N-20.48.440,	E-80.08.220
		1	14	14.00	Nagpur	Bhandara	Lakhandur	Lakhandur	Lakhandur	Gat No. 344	N 20 52 62.09	E 079 53 41.87
	Nagpur Circle Total	**4.00**		**56.00**								
	Nagpur Circle Total	**20.00**		**498.00**								
5(3)(i)	publicity-cum-awareness programme and exhibition on the various schemes being implemented by the state Authority from state fund (including Nature Awareness Program conduct by METDB)	LS		2.00	Nagpur	Nagpur						
		LS		2.00	Nagpur	Wardha						
		LS		2.00	Nagpur	Gondia						
		LS		2.00	Nagpur	Bhandara						
	Nagpur Division Total			**8.00**								
	Total for works under not more than 20% component			**743.00**								
	Nagpur Circle Grand Total			**4541.83**								

ANNUAL PLAN OF OPERATIONS 2022-23

FORMAT VII A---- Forestry and other activities proposed under Net Present Value amount (Please see Rule no. 5(2), 5(3), and proviso under Rule 5(3) (NPV - 04)

Nashik Territorial Circle

Works proposed					Location of work						Latlong	
Rule No.	**Item of work**	**Quantity**	**Rate**	**Amount (Rs. in Lakhs**	**Circle**	**Division**	**Range**	**Round**	**Beat**	**Compartment No**	**Latitude**	**Longitude**
1	**2**	**3**	**4**	**5**	**6**	**7**	**8**	**9**	**10**	**11**	**12**	**13**
5(2)	**works under not less than 80% component (Rule 5 (2))**											
5(2)(a)	**Assisted Natural Regeneration (FYO Works)**	20.00	0.16	3.20	Nashik	West Nashik	Igatpuri	Bhandardarawadi	Barshingave	620	N 19.38'21"	E 073.43'30"
		30.00	0.16	4.80	Nashik	West Nashik	Igatpuri	Korapgaon	Ondali	685	N 19.48'24"	E 073.30'60"
		15.00	0.220	3.30	Nashik	Malegaon	Satana	Kelzar	Malgaon	Malgaon K.-210	N 20.70878	E 73.017953
	Total ANR	**65.00**		**11.30**								
5(2)(b)	**Artificial Regeneration**											
ii	Artificial Regeneration 4th year works	15	0.18	2.70	Nashik	East Nashik	Deola	Bhawade	Rameshwer	322	N 20.38751	E 74.15314
		10	0.18	1.80	Nashik	East Nashik	Deola	Girnare	Kumbharde	343	N 20.37218	E 74.35253
		10	0.18	1.80	Nashik	East Nashik	Deola	Dongargaon	Dongargaon	335	N 20.46311	E 74.34103
		15	0.18	2.70	Nashik	East Nashik	Deola	Kharipada	Umrane	336	N 20.42915	E 74.33993
		27	0.18	4.86	Nashik	East Nashik	Deola	Wakhari	Wakhari	331	N 17.70165	E 75.25629
		25	0.18	4.50	Nashik	East Nashik	Nandgoan	Vehelgaon	Vehelgaon	455	N 20.44283	E 74.75035
		25	0.18	4.50	Nashik	East Nashik	Nandgoan	Nyaydongari-1	Nyaydongari	475	N 20.30919	E 74.66005
		25	0.18	4.50	Nashik	East Nashik	Nandgoan	Chandora-1	Chandora	490	N 20.33928	E 74.76401
		25	0.18	4.50	Nashik	East Nashik	Nandgoan	Chandora-2	Chandora	484	N 20.33526	E 74.76198
		20	0.18	3.60	Nashik	East Nashik	Nandgoan	Birola	Rankheda	477	N 20.34991	E 74.78925
	Total East Nashik	**197**		**35.46**								
ii	Artificial Regenaration works 4 th Year works	10	0.18	1.80	Nashik	West Nashik	Trimbak	Devagon	Awahata	348	N 19.51'368"	E 73.29'436"
		10	0.18	1.80	Nashik	West Nashik	Trimbak	Trimbak	Aswali Harsh	349	N 19.53'231"	E 73.28'231
		10	0.18	1.80	Nashik	West Nashik	Trimbak	Trimbak	Aswali Harsh	356	N 19.51'231"	E 73.31'667"

Works proposed					Location of work						Latlong	
Rule No.	Item of work	Quantity	Rate	Amount (Rs. in Lakhs	Circle	Division	Range	Round	Beat	Compartment No	Latitude	Longitude
1	2	3	4	5	6	7	8	9	10	11	12	13
ii	Artificial Regenaration works 4 th Year works	10	0.18	1.80	Nashik	West Nashik	Trimbak	Trimbak	Devagon	343	N 19.51'940"	E 73.26'041"
		15	0.18	2.70	Nashik	West Nashik	Trimbak	Trimbak	Weluja	2019'181	N 20.02'350"	E 73.29'408"
		15	0.18	2.70	Nashik	West Nashik	Nashik	Gangamhalungi	Gorthan	209	N 20.03'028"	E 73.30'412"
		10	0.18	1.80	Nashik	West Nashik	Nanashi	Nanashi	Pimpalpada	52	N 20.23'592"	E 73.37'514"
		10	0.18	1.80	Nashik	West Nashik	Nanashi	Nanashi	Zarli	68	N 20.14'516"	E 73.37'091"
		25	0.18	4.50	Nashik	West Nashik	Nanashi	Mahaje	Jogmodi	64	N 20.18'472"	E 73.35'993"
		20	0.18	3.60	Nashik	West Nashik	Sinner	Thangon	Dapur	`267	N 19.45'275"	E 74.01'385"
		20	0.18	3.60	Nashik	West Nashik	Sinner	Sinner	Deshwandi	257	N 19.53'932"	E 73.59'383"
		20	0.18	3.60	Nashik	West Nashik	Sinner	Thangon	Patole	270	N 19.44 '172"	E 73.59'665"
		25	0.18	4.50	Nashik	West Nashik	Sinner	NandurShingote	NandurShingote	262	N 19.42'103"	E 74.07'017"
		25	0.18	4.50	Nashik	West Nashik	Sinner	Nadurshingote	Bhogapur	269	N 19.53'727"	E 74.00'444"
		10	0.18	1.80	Nashik	West Nashik	Igatpuri	Korapgon	Ondli	337	N 19.46'495"	E 73.31'161"
		10	0.18	1.80	Nashik	West Nashik	Igatpuri	Bhandardarawadi	Dhamani	297	N 19.53'934"	E 73.59'390"
		15	0.18	2.70	Nashik	West Nashik	Igatpuri	Kushegon	Kushegon	355	N 19.52'721"	E 73.33'478"
		10	0.18	1.80	Nashik	West Nashik	Igatpuri	Khairgon	Kushegon	300	N 19.38'478"	E 73.36'997"
		10	0.18	1.80	Nashik	West Nashik	Barhe	Barhe	Gopalpur	14	N 2.27'833"	E 73.31'455"
	Total west nashik	**280**		**50.40**								
ii	Artificial Regeneration 4 th year Works	20	0.18	3.60	Nashik	Ahmednagar	Ahmednagar	Majale Chincholi	Majale Chincholi	171/171	N 19.14244	E 19.14244
		20	0.18	3.60	Nashik	Ahmednagar	Parner	Mavalewadi	Mavalewadi	379/ 19,20	N 18.53178	E 18.53178
		20	0.18	3.60	Nashik	Ahmednagar	Parner	Ralegan Therpal	Ralegan Therpal	357/157-2	N 18.52829	E 18.52829
		10	0.18	1.80	Nashik	Ahmednagar	Rahuri	Kangar	Kangar	247/402	N 19.25676	E 19.25676
		20	0.18	3.60	Nashik	Ahmednagar	Rahuri	Baragaon Nandur	Baragon Nandur	250/163	N 19.21735	E 19.21735
		10	0.18	1.80	Nashik	Ahmednagar	Rahuri	Mhaisgaon	Mhaisgaon	255b/37,38	N 19.22387	E 19.22387

Works proposed					Location of work						Latlong	
Rule No.	Item of work	Quantity	Rate	Amount (Rs. in Lakhs	Circle	Division	Range	Round	Beat	Compartment No	Latitude	Longitude
1	2	3	4	5	6	7	8	9	10	11	12	13
ii	Artificial Regeneration 4 th year Works	20	0.18	3.60	Nashik	Ahmednagar	Shrigonda T	Surodi	Surodi	95	N 18.42353	E 18.42353
		40	0.18	7.20	Nashik	Ahmednagar	Pathardi	Golegaon	Golegaon	275	N 19.13776	E 75.25475
		30	0.18	5.40	Nashik	Ahmednagar	Takali Dho	Wadgaon Savtal	Wadgaon Savtal	334b/81	N 19.14416	E 74.24664
		30	0.18	5.40	Nashik	Ahmednagar	Takali Dho	Gajdipur	Gajdipur	332b/68	N 19.15030	E 74.28135
		10	0.18	1.80	Nashik	Ahmednagar	Kopargaon	Karanjee	Karanjee	240/162, 163,164,165	N 19.55805	E 74.31319
		20	0.18	3.60	Nashik	Ahmednagar	Karjat	Kharda	Kharda	55	N18.39042	E 75.29086
		20	0.18	3.60	Nashik	Ahmednagar	Karjat	Dighol	Dighol	245	N 18.41374	E 75.32237
		10	0.18	1.80	Nashik	Ahmednagar	Karjat	Kharda	Mungewadi	175	N 18.39287	E 75.32746
		20	0.18	3.60	Nashik	Ahmednagar	Tisgaon	Kolhar	Kolhar	277 / 164	N 19.11337	E 74.52678
		15	0.18	2.70	Nashik	Ahmednagar	Tisgaon	Kolhar	Kolhar	197/945	N 19.11983	E 74.52132
		10	0.18	1.80	Nashik	Ahmednagar	Tisgaon	Madhi	Madhi	99/10	N 19.09026	E 75.06792
		15	0.18	2.70	Nashik	Ahmednagar	Tisgaon	Madhi	Ghatshiras	357	N 19.06667	E 75.03179
	Total for Ahmednagar	**340**		**61.20**								
ii	Artificial Regeneration 4 th year Work (2022-23)	25	0.18	4.50	Nashik	Malegaon	Taharabad	Salher	Jad	Golwad-1- 137	N 20.810368	E 73.985568
		20	0.18	3.60	Nashik	Malegaon	Taharabad	Salher	Jad	Golwad-2- 138	N 20.805422	E 73.98475
		20	0.18	3.60	Nashik	Malegaon	Satana	Satana	Karhe	190	N20.678833	E74.247248
		20	0.18	3.60	Nashik	Malegaon	Satana	Satana	Karhe	190	N20.680167	E74.263332
		35	0.18	6.30	Nashik	Malegaon	Malegaon (T)	Dahival-5	Naimbayati	355	N-20.40.3061	E-74.54.4003
		20	0.18	3.60	Nashik	Malegaon	Malegaon (T)	Dahival-4	Zodga	443	N-20.63.9063	E-74.751585
		20	0.18	3.60	Nashik	Malegaon	Malegaon (T)	Galana	Galana-2	415	N-20.79725	E-74.553232
		20	0.18	3.60	Nashik	Malegaon	Malegaon (T)	Virane	Chinchva	421	N 20.784086	E 74.423225
		20	0.18	3.60	Nashik	Malegaon	Nampur egs	0	0	Nadin--156	N 20.852398	E74.200455
		25	0.18	4.50	Nashik	Malegaon	Nampur egs	0	0	Dregaon-156	N 20.841178	E 74.16476
	Total for Malegaon	**225**		**40.50**								

Works proposed					Location of work						Latlong	
Rule No.	Item of work	Quantity	Rate	Amount (Rs. in Lakhs	Circle	Division	Range	Round	Beat	Compartment No	Latitude	Longitude
1	2	3	4	5	6	7	8	9	10	11	12	13
	Artificial Regeneration 4 th year Work	13.00	0.18	2.34	Nashik	Sangamner	Sangamner I	Pemgiri	Nimaj	216a	N 19 30 23.29	E 74 10 30.91
		5.00	0.18	0.90	Nashik	Sangamner	Sangamner I	Chandnapuri	Chandnapuri	20b	N 19 29 39.54	E 74 9 56.58
		10.00	0.18	1.80	Nashik	Sangamner	Sangamner I	Pemgiri	Pimpalgaon Matha	168a	N 19 35 49.55	E 74 22 12.17
		10.00	0.18	1.80	Nashik	Sangamner	Sangamner II	wadgaonpan	wadgaonpan	205	N 19 37 20.40	E 74 18 21.02
		15.00	0.18	2.70	Nashik	Sangamner	Sangamner II	Warwandi	Warwandi	236	N 19 25 28.94	E 74 21 54.98
		15.00	0.18	2.70	Nashik	Sangamner	Sangamner II	Warwandi	Warwandi	236	N 19 37 39.11	E 74 16 17.02
		20.00	0.18	3.60	Nashik	Sangamner	Sangamner II	Warwandi	Warwandi	237	N 19 26.036	E 74 21.134
		5.00	0.18	0.90	Nashik	Sangamner	Sangamner II	wadgaonpan	wadgaonpan	206	N 19 36 11.38	E 74 16 9.39
		5.00	0.18	0.90	Nashik	Sangamner	Sangamner II	Sangamner	Maldad	211	N 19 38 12.95	E 74 13 7.02
		10.00	0.18	1.80	Nashik	Sangamner	Sangamner II	wadgaonpan	Nimgaon Jali	232	N 19 27.156	E 74 15.722
		20.00	0.18	3.60	Nashik	Sangamner	Sangamner III	Sakur	Pimpalgaon Depa	225	N 19 20 20.65	E 74 16 14.07
		25.00	0.18	4.50	Nashik	Sangamner	Sangamner III	Sakur	Sakur	233b	N 19 26 54.00	E 74 20 39.00
		10.00	0.18	1.80	Nashik	Sangamner	Sangamner III	Panodi	Panodi	439a	N 19 26 55.34	E 74 20 7.04
		15.00	0.18	2.70	Nashik	Sangamner	Sangamner III	Panodi	Ambhore	221e	N 19 25.699	E 74 18.105
		10.00	0.18	1.80	Nashik	Sangamner	Sangamner III	Sakur	Sakur	232	N 19 24 28.25	E 74 15 3.09
		15.00	0.18	2.70	Nashik	Sangamner	Sangamner III	Sakur	Pimpalgaon Depa	225	N 19 24 28.25	E 74 15 3.09
		15.00	0.18	2.70	Nashik	Sangamner	Sangamner III	Sakur	Pimpalgaon Depa	225	N 19 36.118	E 73 47.339
		5.00	0.18	0.90	Nashik	Sangamner	Akole T	Akole	Mehenduri	41	N 19 35.446	E 73 59.379
		5.00	0.18	0.90	Nashik	Sangamner	Rajur	Shenit	Warnghushi	-----	N 19 35.446	E 73 59.379
	Total for Sangamner	**228**		**41.04**								
		1270.00		**228.60**								
	Plantation along river banks (as per ICFRE DPR)	**LS**		**40.00**	Nashik	East Nashik	-	-	-	-	-	-
	(National Authority Scheme)	**LS**		**40.00**	Nashik	West Nashik	-	-	-	-	-	-
		LS		**40.00**	Nashik	Ahmednagar	-	-	-	-	-	-
				120.00								
	Total	**1270.00**		**348.60**								

Works proposed					Location of work						Latlong	
Rule No.	Item of work	Quantity	Rate	Amount (Rs. in Lakhs	Circle	Division	Range	Round	Beat	Compartment No	Latitude	Longitude
1	2	3	4	5	6	7	8	9	10	11	12	13
ii	**Silvicultural operations in forests**											
	Fodder Development (PPO) Plantation	20	2.28	45.60	Nashik	West Nashik	Sinnar	sinnar	Vadgaon Pingala	553	N 19°842581	E 73°90'9586
		25	2.28	57.00	Nashik	West Nashik	Sinnar	sinnar	Vadgaon Pingala	553	N 19°909586	E 73°906037
		20	2.28	45.60	Nashik	West Nashik	Sinnar	sinnar	Vadgaon Pingala	555	N 19°892379	E 73°931022
		25	2.28	57.00	Nashik	West Nashik	Sinnar	sinnar	Deshawandi	554	N 19°889.20	E 73°910.12
		25	2.28	57.00	Nashik	West Nashik	Sinnar	sinnar	Deshawandi	563	N 19°88887	E 73°99416
		40	2.28	91.20	Nashik	West Nashik	Sinnar	sinnar	Deshawandi	558	N 19°86242	E 73°95215
	Total for PPO	**155**		**353.40**								
	Fodder Development (FYO Works)	10.00	1.08	10.80	Nashik	East Nashik	Yeola	Rajapur	Rajapur	533	N 20.17626	E 74.62182
		10.00	1.08	10.80	Nashik	East Nashik	Yeola	Rajapur	Bhulegaon	56	N 20.00417	E 74.68457
		10.00	1.08	10.80	Nashik	East Nashik	Yeola	Rajapur	Rajapur-2	535	N 20.17626	E 74.62182
		10.00	1.08	10.80	Nashik	East Nashik	Yeola	Rajapur	Mamdapur-1	531	N 19.62059	E 74.55310
		10.00	1.08	10.80	Nashik	East Nashik	Yeola	Rajapur	Mamdapur-2	531	N 19.62059	E 74.55310
		10.00	1.08	10.80	Nashik	East Nashik	Yeola	Rajapur	Rahadi	525	N 20.09972	E 74.71969
		10.00	1.08	10.80	Nashik	East Nashik	Yeola	Rajapur	Mamdapur-3	531	N 19.62059	E 74.55310
		10.00	1.08	10.80	Nashik	East Nashik	Yeola	Rajapur	Deodari	523	N 20.12653	E 74.68920
		10.00	1.08	10.80	Nashik	East Nashik	Yeola	Rajapur	Sawargaon-1	552	N 20.10601	E 74.45843
		10.00	1.08	10.80	Nashik	East Nashik	Yeola	Rajapur	Rajapur-3	533	N 20.17534	E 74.62099
		25.00	1.08	27.00	Nashik	East Nashik	Nandgaon	Jamdari	Jamdari	461	N 20.32998	E 74.61987
		25.00	1.08	27.00	Nashik	East Nashik	Nandgaon	Nandgoan	Hinganwadi	361	N 20.25678	E 74.20165
	Total East Nashik	**150.00**		**162.00**								

Works proposed					Location of work						Latlong	
Rule No.	Item of work	Quantity	Rate	Amount (Rs. in Lakhs	Circle	Division	Range	Round	Beat	Compartment No	Latitude	Longitude
1	2	3	4	5	6	7	8	9	10	11	12	13
	Fodder Development as per precribse working Plan (FYO Plantation)	20	1.08	21.60	Nashik	West Nashik	Igatpuri	Igatpuri	Igatpuri	669	N 19.42'56.77	E 73.30'52.20"
		30	1.08	32.40	Nashik	West Nashik	Sinnar	Sinnar	Vadgaon Pingala	552	N 19.52'18.35"	E 73.55'34.68"
		25	1.08	27.00	Nashik	West Nashik	Sinnar	Sinnar	Vadgaon Pingala	555	N 19.51'24.49"	E 73.54'06.22"
		30	1.08	32.40	Nashik	West Nashik	Sinnar	Sinnar	Deshawandi	562	N 19.52'15.37"	E 73.56'09.80"
		20	1.08	21.60	Nashik	West Nashik	Sinnar	Sinnar	Deshawandi	561	N 19.53'57.34"	E 73.58'13.71"
		20	1.08	21.60	Nashik	West Nashik	Sinnar	Sinnar	Deshawandi	560	N 19.52'31.81"	E 73.59'59.73"
		30	1.08	32.40	Nashik	West Nashik	Sinnar	Sinnar	Deshawandi	554	N 19.53'33.80"	E 73.59'59.72"
		30	1.08	32.40	Nashik	West Nashik	Sinnar	Sinnar	Deshawandi	554	N 19.54'12.72"	E 74.00'31.94"
		25	1.08	27.00	Nashik	West Nashik	Nashik	Mulegaon	Khambala	523	N 19.58'25.98"	E 73.39'38.31"
		10	1.08	10.80	Nashik	West Nashik	Nashik	Mulegaon	Khambala	510	N 19.58'27.03"	E 73.37'32.29"
		25	1.08	27.00	Nashik	West Nashik	Nashik	Mulegaon	Khambala	510	N 19.58'27.03"	E 73.37'32.29"
		10	1.08	10.80	Nashik	West Nashik	Nashik	Satpur	Shinvangaon	489	N 20.02'06.87"	E 73.37'57.89"
		10	1.08	10.80	Nashik	West Nashik	Nashik	Gangamhalungi	Devargaon	484	N 20.03'53.04"	E 73.34'42.68"
		10	1.08	10.80	Nashik	West Nashik	Nashik	Gangamhalungi	Rohila	494	N 20.05'13.91"	E 73.39'31.14"
	Total West Nashik	**295**		**318.6**								
	Fodder Devlopment (FYO Work)	20	1.08	21.60	Nashik	Malegaon	Malegaon	Virane	Chinchva	426	N20.789402	E074.471512
		20	1.08	21.60	Nashik	Malegaon	Malegaon	Virane	Chinchva	426	N20.789402	E074.471512
		25	1.08	27.00	Nashik	Malegaon	Malegaon	Galana	Galana-1	424	N20.796601	E74.512291
		25	1.08	27.00	Nashik	Malegaon	Malegaon	Galana	Galana-1	424	N20.796601	E74.512291
		25	1.08	27.00	Nashik	Malegaon	Malegaon	Galana	Galana-1	424	N20.796601	E74.512291
		25	1.08	27.00	Nashik	Malegaon	Malegaon	Galana	Galana-2	412	N20.454810	E74.330355
		25	1.08	27.00	Nashik	Malegaon	Malegaon	Galana	Galana-2	412	N20.454810	E74.330355
		25	1.08	27.00	Nashik	Malegaon	Malegaon	Galana	Galana-2	412	N20.454810	E74.330355
		25	1.08	27.00	Nashik	Malegaon	Malegaon	Karanjgavan	Dahidi	436	N20.670604	E74.546133
	Total Malegaon	**215**		**232.20**								
	Total Fodder FYO works	**660.00**		**712.80**								

Works proposed					Location of work						Latlong	
Rule No.	Item of work	Quantity	Rate	Amount (Rs. in Lakhs	Circle	Division	Range	Round	Beat	Compartment No	Latitude	Longitude
1	2	3	4	5	6	7	8	9	10	11	12	13
	Fodder Devlopment (SYO Work)	10	0.73	7.30	Nashik	East Nashik	Yeola	Rajapur	Rajapur-1	533 535	N 20.17626	E 74.62182
		10	0.73	7.30	Nashik		Yeola	Rajapur	Rajapur-2	533 535	N 20.17534	E 74.62099
		10	0.73	7.30	Nashik		Yeola	Rajapur	Kharwandi-1	524	N 20.10154	E 74.69428
		10	0.73	7.30	Nashik		Yeola	Rajapur	Kharwandi-2	524	N 20.90059	E 74.69185
		10	0.73	7.30	Nashik		Yeola	Rajapur	Deodari	523	N 20.12622	E 74.68965
		10	0.73	7.30	Nashik		Yeola	Rajapur	Somthanjosh	519	N 20.19179	E 74.68136
		10	0.73	7.30	Nashik		Yeola	Rajapur	Sawargaon	552	N 20.10328	E 74.45841
		10	0.73	7.30	Nashik		Yeola	Rajapur	Pimpalkhute	539	N 20.15145	E 74.57836
		10	0.73	7.30	Nashik		Yeola	Manmad	Gorakhnagar	551	N 20.17372	E 74.43472
		10	0.73	7.30	Nashik		Yeola	Rajapur	Naygavhan	548	N 20.16788	E 74.50777
		10	0.73	7.30	Nashik		Chandwad	Vadnerbhairav	Vadnerbhairav-1	606	N 20.25158	E 74.02888
		10	0.73	7.30	Nashik		Chandwad	Vadnerbhairav	Vadnerbhairav-2	606	N 20.24090	E 74.02356
		10	0.73	7.30	Nashik		Chandwad	Vadnerbhairav	Vadnerbhairav-3	606	N 20.23948	E 74.02090
		10	0.73	7.30	Nashik		Chandwad	Vadnerbhairav	Goharan	604	N 20.23214	E 74.20455
	Total East Nashik	**140**		**102.20**								
	Fodder Devlopment (SYO Work)	40	0.73	29.20	Nashik	Ahmednagar	Takali Dhokeshwar	Gajdipur	Gajdipur	68	N 19.12953	E 74.27986
		30	0.73	21.90	Nashik	Ahmednagar		Gajdipur	Gajdipur	68	N 19.13125	E 74.28519
		10	0.73	7.30	Nashik	Ahmednagar		Gajdipur	Gajdipur	68	N 19.12947	E 74.2799
		25	0.73	18.25	Nashik	Ahmednagar		Wadgaon Savtal	Wadgaon Savtal	81	N 19.238909	E 74.43410
		20	0.73	14.60	Nashik	Ahmednagar	Rahuri	Wavrath	Wavrath	28	N 19.275744	E 74.524805
		10	0.73	7.30	Nashik	Ahmednagar		Wavrath	Wavrath	28/ 260a	N 19.283882	E 74.505256
		10	0.73	7.30	Nashik	Ahmednagar		Wavrath	Wavrath	28/ 260a	N 19.282819	E 4.503783
	Total Ahmednagar	**145**		**105.85**								

Works proposed					Location of work						Latlong	
Rule No.	**Item of work**	**Quantity**	**Rate**	**Amount (Rs. in Lakhs**	**Circle**	**Division**	**Range**	**Round**	**Beat**	**Compartment No**	**Latitude**	**Longitude**
1	**2**	**3**	**4**	**5**	**6**	**7**	**8**	**9**	**10**	**11**	**12**	**13**
	Fodder Devlopment syo work	20	0.73	14.60	Nashik	Malegaon	Malegaon	Virane	Chinchva	426	N20.789402	E 74.471512
	Total Malegaon	**20**	**0.73**	**14.600**								
	Fodder Devlopment syo work	20	0.73	14.60	Nashik	Sangamner	Sangamner-2	Sangamner	Kuran	20b	N 19 38.474	E 74 15.736
	Total Sangamner	**20**	**0.73**	**14.6**								
	Total Fodder SYO works	**325**		**237.25**								
	Total for Meadow Development	**1140.00**		**1303.45**								
5 (2) (d)	**Protection of plantation and forests**											
i	**Enroachment removal and forest Protection**											
	Construction of Barrack	1	10.00	10.00	Nashik	East Nashik	Dindori	Dindori	Dindori	--	N 20.20803	E 73.82427
	Construction of Barrack	1	10.00	10.00	Nashik	East Nashik	Chandwad	Chandwad	Chandwad	--	N 20.32837	E 74.24812
	Deep CCT	1	3.20	3.20	Nashik	West Nashik	Peint	Karanjali	Shingdari	227	N20.16499	E73.51726
	Deep CCT	1	3.20	3.20	Nashik	West Nashik	Peint	Karanjali	Pimpraj	245	N20.182963	E73.634516
	Deep CCT	1	3.20	3.20	Nashik	West Nashik	Peint	Karanjali	Kohar	248	N20.11410	E73.34440
	Deep CCT	1	3.20	3.20	Nashik	West Nashik	Peint	Amba	Amba	121	N20.384565	E73.506787
	Deep CCT	1	3.20	3.20	Nashik	West Nashik	Sinnar	Sinnar	Jamgaon	553	N19.848857	E73.972534
	Deep CCT	1	3.20	3.20	Nashik	West Nashik	Sinnar	Sinnar	Pangarwadi	558	N19.32.54	E73.972534
	Deep CCT	1	3.20	3.20	Nashik	West Nashik	Sinnar	Thangaon	Dhauwad	590	N19.698686	E74.027812
	Deep CCT	1	3.20	3.20	Nashik	West Nashik	Sinnar	Thangaon	Dapur	587	N19.696503	E74.009631
	Deep CCT	1	3.20	3.20	Nashik	West Nashik	Sinnar	Thangaon	Thangaon	597	N19.720501	E73.935769
	Deep CCT	1	3.20	3.20	Nashik	West Nashik	Sinnar	Thangaon	Hiware	595	N19.723349	E73.979891
	Deep CCT	1	3.20	3.20	Nashik	West Nashik	Sinnar	N.Shingote	Pimpale	593	N19.745027	E73.983362
	Deep CCT	1	3.20	3.20	Nashik	West Nashik	Sinnar	N.Shingote	Nalwadi	578	N19.676283	E74.30814
	Deep CCT	1	3.20	3.20	Nashik	West Nashik	Sinnar	N.Shingote	Bhajapur	579	N19.665843	E74.065761
	Deep CCT	1	3.20	3.20	Nashik	West Nashik	Trimbak	Trimbak	Pahine	455	N19.53 22	E73.33 15
	Deep CCT	1	3.20	3.20	Nashik	West Nashik	Igatpuri	Korapgaon	tringalwadi	685	N19.46 30	E73.29 589
	Deep CCT	1	3.20	3.20	Nashik	West Nashik	Nashik	Anjaneri	Talwade	500	N19.59 500	E73.33 029
	Deep CCT	1	3.20	3.20	Nashik	West Nashik	Nashik	Anjaneri	Talwade	500	N19.59 425	E73.32 998
	Deep CCT	1	3.20	3.20	Nashik	West Nashik	Nashik	Khambaka	Ganeshgaon	510	N19.02 932	E73.82 234
	Deep CCT	1	3.20	3.20	Nashik	West Nashik	Nashik	Khambaka	Ganeshgaon	510	N19.00 4444	E73.62 620
	Deep CCT	1	3.20	3.20	Nashik	West Nashik	Bhare	Palsan	Bhawada	9	N20 30 5385	E73.29 8486
	Deep CCT	1	3.20	3.20	Nashik	West Nashik	Bhare	Palsan	Bhawada	6	N20 30 5136	E73.28 2840
	Deep CCT	1	3.20	3.20	Nashik	West Nashik	Bhare	Palsan	Bhawada	7	N20 30 0803	E73.29 0680
	Deep CCT	1	3.20	3.20	Nashik	West Nashik	Bhare	Palsan	Khadakmal	30	N20 49 4361	E73.272 687
	Deep CCT	1	3.20	3.20	Nashik	West Nashik	Bhare	Palsan	Khadakmal	30	N20 49 2822	E73.75 5646
	Deep CCT	1	3.20	3.20	Nashik	West Nashik	Trimbak	Devgaon	Devgaon	342	N19 49 17	E73.27 47
	Total Enroachment removal and fores Protection	**27**		**100.00**								

Works proposed					Location of work						Latlong	
Rule No.	Item of work	Quantity	Rate	Amount (Rs. in Lakhs	Circle	Division	Range	Round	Beat	Compartment No	Latitude	Longitude
1	2	3	4	5	6	7	8	9	10	11	12	13
ii	**Survey,Demarcation and Fencing of Sensitive forest Areas**											
	Chainlink Fencing	635 mtr.		27.0000	Nashik	East Nashik	Surgana	Surgana	Surgana	113	N 20.55620	E 73.63988
				6.0000	Nashik	East Nashik	Kanashi	Dhanoli	Dhanoli	111	N 20.57888	E 73.78349
	Chainlink fencing at Vinchur Gavli Cm.No.73 within Muncipal Corporesation Area	1900 RM	0.088	167.20	Nashik	West Nashik	Nashik	Nashik	Mharsul	73	N20.046583	E73'879211
	Chainlink fencing at Sayyad Primpri Sr.No.1320 within Muncipal Corporesation Area	1100 RM	0.088	96.80	Nashik	West Nashik	Nashik	Nashik	Mharsul	73	N20.041189	E73'14448
	Chainlink fencing at Pathadri Cm.No.226 within Muncipal Corporesation Area	1600 RM	0.088	140.80	Nashik	West Nashik	Nashik	Nashik	Pathadri	226	N19.940974	E73'740113
	Chainlink fencing at Vilholi Cm.No.7,8 within Muncipal Corporesation Area	162 RM	0.088	14.25	Nashik	West Nashik	Nashik	Nashik	Samangaon	7.8	N19.928578	E73'726137
	Chainlink fencing at Chandgiri Sr.No.13,14,15,16 within Muncipal Corporesation Area	4500 RM	0.088	396.00	Nashik	West Nashik	Nashik	Nashik	Samangaon	13.14.15.16	N19.927221	E73'908644
	Total for Survey,Demarcation and Fencing of sensitive fores aras			**848.05**								
iv	**Construction,upgradation and maintainance of Protection camps/Protection Huts/Forest Custody/Labour shed**											
	Forest Custody (Lock Up)	1	23.00	23.00	Nashik	East Nashik	Yeola	Yeola	Yeola	--	N 20.04347	E 74.48396
		1	23.00	23.00	Nashik	East Nashik	Surgana	Surgana	Surgana	--	N 20.55620	E 73.63988
	Total for Construction,upgradation and maintainance of Protection camps/Protection Huts/Forest Custody/Labour shed	**2.00**		**46.00**								
	Improving mobility of frontline staff for forest protection and patrolling	LS		2.00	Nashik	East Nashik						
		LS		2.00	Nashik	West Nashik						
		LS		2.00	Nashik	Ahmednagar						
		LS		2.00	Nashik	Malegaon						
		LS		2.00	Nashik	Sangamner						
	Total for Improving mobility of frontline staff for forest protection and patrolling	**0**		**10.00**								
	Total for Protection of plantation and forests	**29.00**		**1004.05**								

Works proposed					Location of work						Latlong	
Rule No.	Item of work	Quantity	Rate	Amount (Rs. in Lakhs	Circle	Division	Range	Round	Beat	Compartment No	Latitude	Longitude
1	2	3	4	5	6	7	8	9	10	11	12	13
5 (2) (f)	**Forest fire prevention and control operations**											
ii	Fire Watchers	2	0.65	1.30	Nashik	West Nashik	Nanashi	Bhanwad	Mokhnal	279, 280, 281	N 20.33.344	E 73.38.344
		2	0.65	1.30	Nashik	West Nashik	Nanashi	Bhanwad	Deosane	277, 278	N 20.44.005	E 73.10.155
		2	0.65	1.30	Nashik	West Nashik	Nanashi	Bhanwad	Bhanwad	276	N 20.25.122	E 73.42.12
		2	0.65	1.30	Nashik	West Nashik	Nanashi	Nanashi	Dehere	272, 273	N 20.38.699	E 73.60.920
		2	0.65	1.30	Nashik	West Nashik	Nanashi	Nanashi	Gandola	269, 270, 271	N 20.38.082	E 73.59.117
		2	0.65	1.30	Nashik	West Nashik	Nanashi	Nanashi	Nanashi North	282, 283, 284	N 20.20.280	E 73.37.170
		2	0.65	1.30	Nashik	West Nashik	Nanashi	Nanashi	Nanashi South	285	N 20.21.450	E 73.37.070
		2	0.65	1.30	Nashik	West Nashik	Nanashi	Mahaje	Karanjkhed	260, 267, 268	N 20.14.041	E 73.33.113
		2	0.65	1.30	Nashik	West Nashik	Nanashi	Mahaje	Golashi	307, 308	N 20.14.008	E 73.37.323
		2	0.65	1.30	Nashik	West Nashik	Nanashi	Mahaje	Jogmodi	292,297, 288, 303	N 20.19.207	E 73.37.264
		2	0.65	1.30	Nashik	West Nashik	Nanashi	Mahaje	Mahaje	298, 299, 300	N 20.18.608	E 73.37.348
	Total for Forest fire prevention and control operations	**22**		**14.30**								
5(2)g	**Soil and moisture conservation works in forest**											
vii	Gabian Structure	3	0.50	1.50	Nashik	West Nashik	Peth	Bhuvan	Ustale		N20'1340	E73'31'53
		1	0.50	0.50	Nashik	West Nashik	Bhare	Palsan	Palsan	8	N 20 29 240	E 073 31 173
		1	0.50	0.50	Nashik	West Nashik	Bhare	Palsan	Bhavada	6	N 20 30 01	E 073 28 34
		1	0.50	0.50	Nashik	West Nashik	Bhare	Palsan	Bhavada	5	N 20 30 32	E 073 29 32
		1	0.50	0.50	Nashik	West Nashik	Bhare	Palsan	Bhavada	6p	N 20 30 37	E 073 28 59
		1	0.50	0.50	Nashik	West Nashik	Bhare	Palsan	khadakmal	10p	N 20 48 637	E 073 56 700
		1	0.50	0.50	Nashik	West Nashik	Bhare	Palsan	khadakmal	12	N 20 47 639	E 073 54 575
		1	0.50	0.50	Nashik	West Nashik	Bhare	Palsan	Wagan	2	N 20 51 4676	E 073 52 6498
		1	0.50	0.50	Nashik	West Nashik	Bhare	Palsan	Wagan	1	N 20 52 0214	E 073 53 4515
		1	0.50	0.50	Nashik	West Nashik	Bhare	Palsan	Wagan	3	N 20 31 21	E 073 30 00
		2	0.50	1.00	Nashik	West Nashik	Sinnar	Thangaon	Thangaon	596	N-19. 405961	E-73.54323
		2	0.50	1.00	Nashik	West Nashik	Sinnar	Thangaon	Thangaon	596	N-19. 426110	E-73.5634
		2	0.50	1.00	Nashik	West Nashik	Sinnar	Thangaon	Thangaon	596	N-19. 386465	E-73.919413
		2	0.50	1.00	Nashik	West Nashik	Sinnar	Thangaon	Thangaon	596	N-19. 606273	E-73.879007
		2	0.50	1.00	Nashik	West Nashik	Sinnar	Thangaon	Thangaon	596	N-19. 688085	E-73.91482

Works proposed					Location of work						Latlong	
Rule No.	Item of work	Quantity	Rate	Amount (Rs. in Lakhs	Circle	Division	Range	Round	Beat	Compartment No	Latitude	Longitude
1	2	3	4	5	6	7	8	9	10	11	12	13
	Gabian Structure	2	0.50	1.00	Nashik	West Nashik	Sinnar	Thangaon	Thangaon	596	N-19. 64587	E-73.88212
		2	0.50	1.00	Nashik	West Nashik	Sinnar	Thangaon	Thangaon	596	N-19. 687368	E-73.913522
		2	0.50	1.00	Nashik	West Nashik	Sinnar	Thangaon	Thangaon	596	N-19. 688088	E-73.909619
		2	0.50	1.00	Nashik	West Nashik	Sinnar	Thangaon	Thangaon	596	N-19. 688292	E-73.929722
		2	0.50	1.00	Nashik	West Nashik	Sinnar	Thangaon	Thangaon	598	N-19. 707596	E-73.949936
		2	0.50	1.00	Nashik	West Nashik	Sinnar	Thangaon	Thangaon	598	N-19. 43000	E-73.55107
		2	0.50	1.00	Nashik	West Nashik	Sinnar	Thangaon	Thangaon	598	N-19. 43053	E-73.55109
		14	0.50	7.00	Nashik	West Nashik	Trimbak	TakeDevgaon	TakeDevgaon	332, 333	N 19°46'03"	E 73°28'19"
	Total West Gabiyan	**50.00**		**25.00**								
	Gabian structure	1	0.50	0.50	Nashik	Ahmednagar	Ahmednagar	More Chinchora	More Chinchora	270	N 19.1739	E 74.4755
		1	0.50	0.50	Nashik	Ahmednagar	Ahmednagar	More Chinchora	More Chinchora	270	N 19.1742	E 74.4754
		1	0.50	0.50	Nashik	Ahmednagar	Ahmednagar	More Chinchora	More Chinchora	270	N 19.1742	E 74.4809
		1	0.50	0.50	Nashik	Ahmednagar	Ahmednagar	More Chinchora	More Chinchora	270	N 19.1742	E 74.4752
		1	0.50	0.50	Nashik	Ahmednagar	Ahmednagar	More Chinchora	More Chinchora	270	N 19.1743	E 74.4830
		1	0.50	0.50	Nashik	Ahmednagar	Ahmednagar	More Chinchora	More Chinchora	270	N 19.1745	E 74.4832
		1	0.50	0.50	Nashik	Ahmednagar	Ahmednagar	More Chinchora	More Chinchora	270	N 19.1744	E 74.4835
		1	0.50	0.50	Nashik	Ahmednagar	Ahmednagar	More Chinchora	More Chinchora	270	N 19.1737	E 74.4842
		1	0.50	0.50	Nashik	Ahmednagar	Ahmednagar	Vilad	Vilad	199	N 19.1238	E 74.4112
		1	0.50	0.50	Nashik	Ahmednagar	Ahmednagar	Vilad	Vilad	199	N 19.1237	E 74.4113
		1	0.50	0.50	Nashik	Ahmednagar	Ahmednagar	Vilad	Vilad	199	N 19.1235	E 74.4131
		1	0.50	0.50	Nashik	Ahmednagar	Ahmednagar	Vilad	Vilad	199	N 19.1232	E 74.4126
		1	0.50	0.50	Nashik	Ahmednagar	Ahmednagar	Vilad	Vilad	199	N 19.1231	E 74.4134
		1	0.50	0.50	Nashik	Ahmednagar	Ahmednagar	Vilad	Vilad	199	N 19.1222	E 74.4137
		1	0.50	0.50	Nashik	Ahmednagar	Ahmednagar	Vilad	Vilad	199	N 19.1257	E 74.4150
		1	0.50	0.50	Nashik	Ahmednagar	Ahmednagar	Vilad	Vilad	199	N 19.1248	E 74.4150
		1	0.50	0.50	Nashik	Ahmednagar	Ahmednagar	Vilad	Vilad	199	N 19.1224	E 74.4138
		1	0.50	0.50	Nashik	Ahmednagar	Ahmednagar	Vilad	Vilad	199	N 19.1241	E 74.4159
		1	0.50	0.50	Nashik	Ahmednagar	Ahmednagar	Vilad	Vilad	199	N 19.1151	E 74.4199
		1	0.50	0.50	Nashik	Ahmednagar	Ahmednagar	Vilad	Vilad	199	N 19.1154	E 74.4103
		1	0.50	0.50	Nashik	Ahmednagar	Ahmednagar	Vilad	Vilad	199	N 19.1149	E 74.4105

Works proposed					Location of work						Latlong	
Rule No.	Item of work	Quantity	Rate	Amount (Rs. in Lakhs	Circle	Division	Range	Round	Beat	Compartment No	Latitude	Longitude
1	2	3	4	5	6	7	8	9	10	11	12	13
	Gabian structure	1	0.50	0.50	Nashik	Ahmednagar	Ahmednagar	Vilad	Vilad	199	N 19.1149	E 74.4105
		1	0.50	0.50	Nashik	Ahmednagar	Ahmednagar	Vilad	Vilad	199	N 19.1149	E 74.4111
		1	0.50	0.50	Nashik	Ahmednagar	Ahmednagar	Vilad	Vilad	199	N 19.1144	E 74.4113
		1	0.50	0.50	Nashik	Ahmednagar	Karjat	Dhamangaon	Dhamangaon	140	N 18.732279	E 75.456466
		1	0.50	0.50	Nashik	Ahmednagar	Karjat	Dhamangaon	Dhamangaon	140	N 318.733378	E 75.456333
		1	0.50	0.50	Nashik	Ahmednagar	Karjat	Dhamangaon	Dhamangaon	140	N 18.733143	E 75.456004
		1	0.50	0.50	Nashik	Ahmednagar	Karjat	Dhamangaon	Dhamangaon	140	N 18.737205	E 75.456953
		1	0.50	0.50	Nashik	Ahmednagar	Karjat	Dhamangaon	Dhamangaon	140	N 18.734925	E 75.456089
		1	0.50	0.50	Nashik	Ahmednagar	Karjat	Dhamangaon	Dhamangaon	140	N 18.736246	E 75.456665
		1	0.50	0.50	Nashik	Ahmednagar	Karjat	Dhamangaon	Dhamangaon	140	N 18.73736308	E 75.456748
		1	0.50	0.50	Nashik	Ahmednagar	Karjat	Dhamangaon	Dhamangaon	140	N 18.736381	E 75.456704
		1	0.50	0.50	Nashik	Ahmednagar	Karjat	Dhamangaon	Dhamangaon	140	N 18.7368	E 75.45694
		1	0.50	0.50	Nashik	Ahmednagar	Karjat	Devdaithan	Devdaithan	426	N 18.739792	E 75.41402
		1	0.50	0.50	Nashik	Ahmednagar	Karjat	Devdaithan	Devdaithan	426	N 18.736567	E 75.414813
		1	0.50	0.50	Nashik	Ahmednagar	Karjat	Devdaithan	Devdaithan	426	N 18.736505	E 75.418073
		1	0.50	0.50	Nashik	Ahmednagar	Karjat	Devdaithan	Devdaithan	426	N 18.736628	E 75.414717
		1	0.50	0.50	Nashik	Ahmednagar	Karjat	Devdaithan	Devdaithan	426	N 18.736524	E 75.415581
		1	0.50	0.50	Nashik	Ahmednagar	Karjat	Devdaithan	Devdaithan	426	N 18.739121	E 75.417502
		1	0.50	0.50	Nashik	Ahmednagar	Karjat	Devdaithan	Devdaithan	426	N 18.738769	E 75.414535
		1	0.50	0.50	Nashik	Ahmednagar	Karjat	Devdaithan	Devdaithan	426	N 18.739701	E 75.413488
	Total Gabiyan	**41.00**		**20.50**								
	Gabian Bandhara	10	0.50	5.00	Nashik	Malegaon	Satana	Satana	Kotbel	(Kotbel) 189	N.20.697615	E74.224178
		2	0.50	1.00	Nashik	Malegaon	Satana	Satana	Lakhmapur	(Lakhmapur)193	N20.578008	E74.366262
		3	0.50	1.50	Nashik	Malegaon	Satana	Satana	Karhe	(Karhe) 198, 199	N20.640809	E74.228436
		3	0.50	1.50	Nashik	Malegaon	Satana	Satana	Lakhmapur	(A Saundane) 195	N20.559673	E74.28927
	Total Gabiyan Bandhara	**18.00**		**9.00**								
	Total	**109.00**		**54.50**								

Works proposed					Location of work						Latlong	
Rule No.	Item of work	Quantity	Rate	Amount (Rs. in Lakhs	Circle	Division	Range	Round	Beat	Compartment No	Latitude	Longitude
1	2	3	4	5	6	7	8	9	10	11	12	13
	Cement Bandhara	1.00	15.00	15.00	Nashik	East Nashik	Kanashi	Jaidar	Kathara	270	N- 20.62.62	E- 73.91.02
		1.00	15.00	15.00	Nashik	East Nashik	Kanashi	Jaidar	Jaidar	115	N- 20.36.27	E- 73.50.19
		1.00	15.00	15.00	Nashik	East Nashik	Kanashi	Jaidar	Mohbari	260	N- 20.33.4	E- 73.56.33
		1.00	15.00	15.00	Nashik	East Nashik	Kanashi	Jaidar	Mohbari	260	N- 20.33.12	E- 73.56.40
		1.00	15.00	15.00	Nashik	East Nashik	Kanashi	Jaidar	Khardedigar	120	N- 20.39.80	E- 73.51.18
		1.00	15.00	15.00	Nashik	East Nashik	Kanashi	Hatgad	Hatgad	95	N- 20.33.40	E- 73.45.07
		1.00	15.00	15.00	Nashik	East Nashik	Kanashi	Hatgad	Hatgad	95	N- 20.33.40	E- 73.45.07
		1.00	15.00	15.00	Nashik	East Nashik	Kanashi	Hatgad	Hatgad	95	N- 20.33.40	E- 73.45.07
		1.00	15.00	15.00	Nashik	East Nashik	Kanashi	Hatgad	Hatgad	95	N- 20.33.42	E- 73.45.100
		1.00	15.00	15.00	Nashik	East Nashik	Kanashi	Hatgad	Hatgad	109	N- 20.32.35	E- 73.44.45
		1.00	15.00	15.00	Nashik	East Nashik	Kanashi	Hatgad	Hatgad	109	N- 20.32.35	E- 73.44.48
		1.00	15.00	15.00	Nashik	East Nashik	Kanashi	Hatgad	Hatgad	109	N- 20.32.35	E- 73.44.48
		1.00	15.00	15.00	Nashik	East Nashik	Kanashi	Hatgad	Dangrale	576	N- 20.27.52	E- 73.41.02
		1.00	15.00	15.00	Nashik	East Nashik	Kanashi	Hatgad	Dangrale	577	N- 20.27.04	E- 73.41.45
		1.00	15.00	15.00	Nashik	East Nashik	Kanashi	Hatgad	Dangrale	576	N- 20.27.54	E- 73.41.55
		15.00		**225.00**								
iii	Cement Nala Bandh	1	15.00	15.00	Nashik	West Nashik	Peth	Bhuvan	Ustale	170,262	N20'14'001"	E73'33'466
		1	15.00	15.00	Nashik	West Nashik	Peth	Bhuvan	Ambapani	53	N20'22'02"	E73'45'84'
		1	15.00	15.00	Nashik	West Nashik	Peth	Savarna	Savarna	158,	N20'16'43	E73'26'43
		1	15.00	15.00	Nashik	West Nashik	Peth	Savarna	Kayre p.	102	N20'19'05	E73'26'17
		1	15.00	15.00	Nashik	West Nashik	Peth	Savarna	Bhedpada	98	N20'21'46"9	E73'26'17
		1	15.00	15.00	Nashik	West Nashik	Trimbak	Ambai	Ambai	433pt	N 9°59'32.76"	E 73°29'53.6"
		1	15.00	15.00	Nashik	West Nashik	Trimbak	Ambai	Velunja	431	N 20°01'52"	E 73°28'29"
		1	15.00	15.00	Nashik	West Nashik	Trimbak	Trimbak	Ashwali harsg	460	N 19°88'35"	E 73°47'16"
		1	15.00	15.00	Nashik	West Nashik	Trimbak	Trimbak	Kalmuste	443 444, 445	N 19°55'49"	E 73°28'18"
		1	15.00	15.00	Nashik	West Nashik	Nashik	Mulegaon	Mulegaon	517	N 19.4445	E 73.4536
		1	15.00	15.00	Nashik	West Nashik	Nashik	Mulegaon	Khambala	510	N 19.994482	E 73.622312
		1	15.00	15.00	Nashik	West Nashik	Nashik	Gangamhalungi	Gangamhalungi	491	N 20 03 443	E 73 35 087
		1	15.00	15.00	Nashik	West Nashik	Nashik	Gangamhalungi	Devargaon	485	N 20.042086	E 73.3418.92
		1	15.00	15.00	Nashik	West Nashik	Nashik	Nashik	Mharsul	194	N 20 04 096	E 073 48 718
		1	15.00	15.00	Nashik	West Nashik	Nashik	Nashik	Samangaon	13	N 19.92677	E 73.91087
	Total West CNB	**15.00**		**225.00**								
	Cement Bandhare	1	15.00	15.00	Nashik	Malegaon	Malegaon (T)	Virane	Vitane	428	N-20.4419	E-74.2804
	Total	**31.00**		**465.00**								

Works proposed					Location of work						Latlong	
Rule No.	Item of work	Quantity	Rate	Amount (Rs. in Lakhs	Circle	Division	Range	Round	Beat	Compartment No	Latitude	Longitude
1	2	3	4	5	6	7	8	9	10	11	12	13
viii	Check Dam	1	0.45	0.45	Nashik	West Nashik	Sinnar	Konambe	Konambe	601	N-19.459	E-73.545
		1	0.45	0.45	Nashik	West Nashik	Igatpuri	Khairgaon	Khairgaon	630	N 19.41'295"	E 73.40'420"
		1	0.45	0.45	Nashik	West Nashik	Igatpuri	Khairgaon	Kurungwadi	643	N 19.37'849"	E 73.27'623"
		1	0.45	0.45	Nashik	West Nashik	Igatpuri	Khairgaon	Bhavali	656	N 19.36'573"	E73.35'249"
		1	0.45	0.45	Nashik	West Nashik	Igatpuri	Korapgaon	Ondali	685	N 19.76'032"	E 73.50'52"
		1	0.45	0.45	Nashik	West Nashik	Igatpuri	Korapgaon	Korapgaon	683	N 19.76'511"	E 73.52'989"
		1	0.45	0.45	Nashik	West Nashik	Igatpuri	Bhandardarawa i;	Dhamani	627	N 19.704'215"	E 73.685'141"
		1	0.45	0.45	Nashik	West Nashik	Igatpuri	Bhandardarawa i;	Barshingave	635	N 19.37'13"	E 73.42'24"
		1	0.45	0.45	Nashik	West Nashik	Igatpuri	Bhandardarawa i;	Adasre	618	N 19.39'573"	E 73.45'66"
		1	0.45	0.45	Nashik	West Nashik	Igatpuri	Bhandardarawa i;	Khed	632	N 19.405'340"	E 73.405'177"
	Total Check Dam	**10.00**		**4.50**								
	Vantale	2.00	3.00	6.00	Nashik	Malegaon	Satana	Dangsaundane	Dangsaundane	(Bhavnagar) 232	N20.38.54	E74.00.15
		2.00	3.00	6.00	Nashik	Malegaon	Satana	Dangsaundane	Karanjkhed	(Karanjkhed) 236 part	N20.38.52	E74.00.24
		2.00	3.00	6.00	Nashik	Malegaon	Satana	Virgaon	Kersane	(Dasane) 204	N20.43.332	E074.04.259
		2.00	3.00	6.00	Nashik	Malegaon	Satana	Virgaon	Kersane	(Dasane) 204	N20.43.436	E074.04.236
		1.00	3.00	3.00	Nashik	Malegaon	Satana	Kelzar	Kelzar	(Vathoda) 224	N20.40589	E073.55016
		1.00	3.00	3.00	Nashik	Malegaon	Satana	Kelzar	Kelzar	(Vathoda) 224	N20.40529	E073.55082
		1.00	3.00	3.00	Nashik	Malegaon	Satana	Kelzar	Malgaon	(Bhavade) 209	N20.716127	E74.012995
		1.00	3.00	3.00	Nashik	Malegaon	Satana	Kelzar	Malgaon	(Bhavade) 209	N20.717045	E74.014475
	Total Vantale	**12.00**		**36.00**								
i	Deep cct	20.00	0.46	9.200	Nashik	East Nashik	Deola	Umrane	Umrane	370	N 20.22336	E 74.18896
		20.00	0.46	9.200	Nashik	East Nashik	Deola	Nimbole	Nimbole	335	N 20.4909	E 74.3398
		20.00	0.46	9.200	Nashik	East Nashik	Deola	Mahalpatane	Mahalpatane	334	N 20.4909	E 74.3398
		20.00	0.46	9.200	Nashik	East Nashik	Deola	Dongargaon	Dongargaon	336	N 20.4622	E 74.3472
		20.00	0.46	9.200	Nashik	East Nashik	Deola	Meshi	Meshi	334	N 20.4731	E 74.3226
		10.00	0.46	4.600	Nashik	East Nashik	Deola	Sawaki	Sawaki	244	N 20.3249	E 74.0916
		20.00	0.46	9.200	Nashik	East Nashik	Deola	Rameshwar	Rameshwar	323	N 20.2456	E 74.0912
		10.00	0.46	4.600	Nashik	East Nashik	Dindori	Aswalipada	Aswalipada	582	N 20.38461	E 73.82299
		10.00	0.46	4.600	Nashik	East Nashik	Dindori	Pingalwadi	Pingalwadi	569	N 20.43361	E 72.4318
		150.00		**69.000**								

Works proposed					Location of work						Latlong	
Rule No.	Item of work	Quantity	Rate	Amount (Rs. in Lakhs	Circle	Division	Range	Round	Beat	Compartment No	Latitude	Longitude
1	2	3	4	5	6	7	8	9	10	11	12	13
iv	Deep CCT	5.00	59.60	2.98	Nashik	West Nashik	Igatpuri	Igatpuri	Girnare	668	N 19.42'42.76"	E 73.32'42.01"
		5.00	59.60	2.98	Nashik	West Nashik	Igatpuri	Igatpuri	Girnare	668	N 19.42'49.09"	E 73.32'32.37"
		5.00	59.60	2.98	Nashik	West Nashik	Igatpuri	Igatpuri	Chinchalakhair	664	N 19.44'3.54"	E 73.31'45.54"
		5.00	59.60	2.98	Nashik	West Nashik	Igatpuri	Igatpuri	Chinchalakhair	665	N 19.44'35.06"	E 73.31'54.48"
		5.00	59.60	2.98	Nashik	West Nashik	Igatpuri	Igatpuri	Nandgaon	653	N 19.40'17.16"	E 73.35'27.88"
		5.00	59.60	2.98	Nashik	West Nashik	Igatpuri	Igatpuri	Nandgaon	653	N 19.39'39.94"	E 73.35'28.37"
		5.00	59.60	2.98	Nashik	West Nashik	Igatpuri	Igatpuri	Nandgaon	658	N 19.37'31.27"	E 73.34'38.31"
		5.00	59.60	2.98	Nashik	West Nashik	Igatpuri	Igatpuri	Igatpuri	661	N 19.42'24.27"	E 73.32'43.92"
		5.00	59.60	2.98	Nashik	West Nashik	Igatpuri	Igatpuri	Igatpuri	661	N 19.40'41.8"	E 73.32'53.11"
		5.00	59.60	2.98	Nashik	West Nashik	Igatpuri	Igatpuri	Girnare	672	N 19.42'47.71"	E 73.32'15.04"
		5.00	59.60	2.98	Nashik	West Nashik	Igatpuri	Igatpuri	Girnare	672	N 19.42'47.27"	E 73.32'27.8"
		5.00	59.60	2.98	Nashik	West Nashik	Igatpuri	Khairgaon	Khairgaon	630	N 19.41'403"	E 73.39'930"
		5.00	59.60	2.98	Nashik	West Nashik	Igatpuri	Khairgaon	Khairgaon	630	N 19.41'403"	E 73.39'919"
		5.00	59.60	2.98	Nashik	West Nashik	Igatpuri	Khairgaon	Khairgaon	630	N 19.40'974"	E 73.40'285"
		5.00	59.60	2.98	Nashik	West Nashik	Igatpuri	Khairgaon	Khairgaon	630	N 19.40'867"	E 73.40'142"
		5.00	59.60	2.98	Nashik	West Nashik	Igatpuri	Khairgaon	Khairgaon	630	N 19.41'982"	E 73.40'034"
		5.00	59.60	2.98	Nashik	West Nashik	Igatpuri	Khairgaon	Kurungwadi	643	N 19.36'538"	E 73.36'665"
		5.00	59.60	2.98	Nashik	West Nashik	Igatpuri	Khairgaon	Kurungwadi	643	N 19.36'455"	E 73.36'730"
		5.00	59.60	2.98	Nashik	West Nashik	Igatpuri	Khairgaon	Kurungwadi	643	N 19.36'320"	E 73.36'706"
		5.00	59.60	2.98	Nashik	West Nashik	Igatpuri	Khairgaon	Kurungwadi	643	N 19.36'520"	E 73.36'506"
		5.00	59.60	2.98	Nashik	West Nashik	Igatpuri	Khairgaon	Bhavali	656	N 19.36'534"	E 73.35'147"
		5.00	59.60	2.98	Nashik	West Nashik	Igatpuri	Khairgaon	Bhavali	656	N 19.36'483"	E 73.35'037"
		5.00	59.60	2.98	Nashik	West Nashik	Igatpuri	Khairgaon	Bhavali	656	N 19.36'464"	E 73.35'408"
		5.00	59.60	2.98	Nashik	West Nashik	Igatpuri	Khairgaon	Bhavali	656	N 19.36'531"	E 73.35'089"
		5.00	59.60	2.98	Nashik	West Nashik	Igatpuri	Khairgaon	Bhavali	656	N 19.36'493"	E 73.35'132"
		5.00	59.60	2.98	Nashik	West Nashik	Igatpuri	Khairgaon	Kaluste	652	N 19.40'450"	E 73.36'353"
		5.00	59.60	2.98	Nashik	West Nashik	Igatpuri	Khairgaon	Kaluste	652	N 19.40'403"	E 73.36'343"
		5.00	59.60	2.98	Nashik	West Nashik	Igatpuri	Khairgaon	Kaluste	652	N 19.40'414"	E 73.36'401"
		5.00	59.60	2.98	Nashik	West Nashik	Igatpuri	Khairgaon	Kaluste	648	N 19.39'266"	E 73.37'320"
		5.00	59.60	2.98	Nashik	West Nashik	Igatpuri	Khairgaon	Kaluste	648	N 19.39'282"	E 73.37'165"
	Total West Deep CCT	**150.00**		**89.40**								
	Deep CCT	20	0.51	10.29	Nashik	Ahmednagar	Karjat	Jamkhed	Dhamangaon	245	N 19.352416	E 74.503663
	Total Deep CCT	20		10.29								

Works proposed					Location of work						Latlong	
Rule No.	Item of work	Quantity	Rate	Amount (Rs. in Lakhs	Circle	Division	Range	Round	Beat	Compartment No	Latitude	Longitude
1	2	3	4	5	6	7	8	9	10	11	12	13
	Deep CCT	20	0.89	17.82	Nashik	Malegaon	Nampur (egs)	Mulher	Mulher	182	N20.44042	E74.05027
		2	0.89	17.82	Nashik	Malegaon	Nampur (egs)	Mulher	Mulher	182	N20.43548	E74.04565
		20	0.89	17.82	Nashik	Malegaon	Nampur (egs)	Mulher	Mulher	181	N20.44394	E74.02454
		20	0.89	17.82	Nashik	Malegaon	Nampur (egs)	Mulher	Mulher	180	N20.44551	E74.0118
		20	0.89	17.82	Nashik	Malegaon	Nampur (egs)	Mulher	Mulher	182	N20.43537	E74.05123
		25	0.772	19.300	Nashik	Malegaon	Malegaon (T)	Galana	Galana-2	414	N-20.47.10	E-74.30.52
	Total Deep CCT	**107.00**		**108.40**								
		427.00		**277.09**								
	Dagadi Nala Bandh	5.00	3.00	15.00	Nashik	East Nashik	Umbrthan	Hadkaichond	Pangarne-1	20	N 20.65998	E 73.50396
		5.00	3.00	15.00	Nashik	East Nashik	Umbrthan	Pimpalsond	Umberpada-1	8	N 20.59496	E 73.51696
		5.00	3.00	15.00	Nashik	East Nashik	Umbrthan	Ragatvihir	Manda	30	N 20.57091	E 73.50607
		5.00	3.00	15.00	Nashik	East Nashik	Kanashi	Kanashi	Kanashi	262pt	N- 20.33.19	E- 73.55.25
	Total East Nashik	**20.00**		**60.00**								
vi	**Mati Nalabandh**	1	3	3.00	Nashik	West Nashik	Sinnar	Konambe	Borkhind	608	N-19.4722	E-73.5127
		1	3	3.00	Nashik	West Nashik	Sinnar	Konambe	Borkhind	608	N-19.4725	E-73.5121
		1	3	3.00	Nashik	West Nashik	Sinnar	Konambe	Aundhewadi	606	N-19.4548	E-73.5035
	MNB	1	3	3.00	Nashik	West Nashik	Sinnar	Konambe	Aundhewadi	606	N-19.4530	E-73.5045
		1	3	3.00	Nashik	West Nashik	Sinnar	Konambe	Aundhewadi	606	N-19.4730	E-73.5058
		1	3	3.00	Nashik	West Nashik	Sinnar	Konambe	Konambe	601	N-19.5132	E-73.5837
		1	3	3.00	Nashik	West Nashik	Sinnar	Konambe	Konambe	601	N-19.5334	E-73.5324
		1	3	3.00	Nashik	West Nashik	Sinnar	Konambe	Borkhind	599	N-19.5347	E-73.5321
		1	3	3.00	Nashik	West Nashik	Sinnar	Konambe	Borkhind	599	N-19.7421	E-73.9505
		1	3	3.00	Nashik	West Nashik	Sinnar	Sinnar	VadgaonPingal	553	N-19.50885	E-74.54341
		1	3	3.00	Nashik	West Nashik	Sinnar	Sinnar	VadgaonPingal	553	N-19.50868	E-74.54361
		1	3	3.00	Nashik	West Nashik	Sinnar	Sinnar	VadgaonPingal	552	N-19.51384	E-74.53502
		1	3	3.00	Nashik	West Nashik	Sinnar	Sinnar	Deshwandi	557	N-19.87178	E-74.93958
		1	3	3.00	Nashik	West Nashik	Sinnar	Sinnar	Deshwandi	557	N-19.87179	E-74.93958
		1	3	3.00	Nashik	West Nashik	Sinnar	Thangaon	Thangaon	598	N-1942575.	E-73.55116
		1	3	3.00	Nashik	West Nashik	Sinnar	Thangaon	Thangaon	598	N-19. 43055	E-73.55126
		1	3	3.00	Nashik	West Nashik	Sinnar	Thangaon	Thangaon	598	N-19. 43018	E-73.55163
		1	3	3.00	Nashik	West Nashik	Sinnar	Thangaon	Dhulwad	589	N-19. 748903	E-73.991514
		1	3	3.00	Nashik	West Nashik	Sinnar	Thangaon	Dhulwad	589	N-19. 74815	E-73.994595
		1	3	3.00	Nashik	West Nashik	Sinnar	Thangaon	Dhulwad	589	N-19. 748343	E-73.398167
	Total West MNB	**19.00**		**60.00**								

Works proposed					Location of work						Latlong	
Rule No.	Item of work	Quantity	Rate	Amount (Rs. in Lakhs	Circle	Division	Range	Round	Beat	Compartment No	Latitude	Longitude
1	2	3	4	5	6	7	8	9	10	11	12	13
	Mati Nalabandh	1	2	2.00	Nashik	Ahmednagar	Rahuri	Daradgaon Thadi -3	Daradgaon Thadi -3	17	N 19.368979	E 74.439326
		1	2	2.00	Nashik	Ahmednagar	Rahuri	Mhisgaon-5	Mhisgaon-5	37, 38	N 19.368969	E 74.439341
		1	2	2.00	Nashik	Ahmednagar	Rahuri	Mhisgaon-6	Mhisgaon-6	37,38	N 19.259469	E 74.506846
		1	2	2.00	Nashik	Ahmednagar	Rahuri	Wavrath -5	Wavrath -5	28	N 19.256662	E 74.506659
		1	2	2.00	Nashik	Ahmednagar	Rahuri	Wavrath - 6	Wavrath - 6	28	N 19.411738	E 74.588898
		1	2	2.00	Nashik	Ahmednagar	Pathardi	Shevgaon	Rakshi-4	28	N 19.2026	E 75.1923
		1	2	2.00	Nashik	Ahmednagar	Pathardi	Pathardi	Karodi-10	93	N 19.192469	E 75.369468
		1	2	2.00	Nashik	Ahmednagar	Pathardi	Pathardi	Tondoli-5	86	N 19.237003	E 75.362105
		1	2	2.00	Nashik	Ahmednagar	Pathardi	Pathardi	Nandur Nimbaditya-6	517		
	MNB	1	2	2.00	Nashik	Ahmednagar	Pathardi	Shevgaon	Ranegaon-11	78/273	N 19.242326	E 75.365573
		1	2	2.00	Nashik	Ahmednagar	Pathardi	Shevgaon	Ranegaon-12	78/273	N 19.256907	E 75.380385
		1	2	2.00	Nashik	Ahmednagar	Takali Dhok.	Waranwadi	Waranwadi	325	N 19.229086	E 74.328776
		1	2	2.00	Nashik	Ahmednagar	Takali Dhok.	Waranwadi	Waranwadi	325	N 19.228205	E 74.329298
		1	2	2.00	Nashik	Ahmednagar	Takali Dhok.	Waranwadi	Waranwadi	325	N 19.226743	E 74.327872
		1	2	2.00	Nashik	Ahmednagar	Takali Dhok.	Waranwadi	Waranwadi	25	N 19.226743	E 74.327873
	Total MNB	**15.00**		**30.00**								
	Dagadi Nala Bandh	1	10	10	Nashik	Malegaon	Taharabad	Mulher	Mohalangi	Jamoti 179	N 20.777889	E 74.031456
		1	10	10	Nashik	Malegaon	Taharabad	Mulher	Mohalangi	Jaitapur 146	N 20.814294	E 74.032364
		1	10	10	Nashik	Malegaon	Taharabad	Mulher	Mulher	Mungase 173 pt	N 20.729644	E 74.092836
	Total NB	**3**		**30.00**								
	Mati Nala Bandh	1.00	3.00	3.00	Nashik	Sangamner	Sangamner-1	Jawale Baleshwar	Nimaj	218b	N 19.2510	E 74.1040
		1.00	3.00	3.00	Nashik	Sangamner	Sangamner-1	Jawale Baleshwar	Jawale Baleshwar	177	N 19.4050	E 74.1390
		1.00	3.00	3.00	Nashik	Sangamner	Sangamner-1	Jawale Baleshwar	Jawale Baleshwar	177	N 19.2557	E 74.34
		1.00	3.00	3.00	Nashik	Sangamner	Sangamner-1	Jawale Baleshwar	Hiwargaon Pathar	170	N 19.4279	E 74.0962
		1.00	3.00	3.00	Nashik	Sangamner	Sangamner-1	Jawale Baleshwar	Hiwargaon Pathar	172	N 19.2727	E 74.1013
	Total Sangamner	**5.00**		**15.00**								
		62.00		**195.00**								
	Total for Soil and moisture conservation works in forest	**651.00**		**1032.09**								

Works proposed					Location of work						Latlong	
Rule No.	Item of work	Quantity	Rate	Amount (Rs. in Lakhs	Circle	Division	Range	Round	Beat	Compartment No	Latitude	Longitude
1	2	3	4	5	6	7	8	9	10	11	12	13
	Wildlife Management and Man Animal Conflict											
5(2)i	**Improvement of wildlife habitat as provided in approved wildlife management plan/working plan**											
iii	**Creation and maintaenance of water sources/water holes for wildlife**											
	New Water holes creation With borewell	1	2.00	2.00	Nashik	East Nashik	Yeola	Yeola	Yeola	Gut no.50, Gut	N 20.049480	E 74.486618
		1	2.00	2.00	Nashik	East Nashik	Deola	Deola	Deola	244 ,245	N 20.33.30	E 074.08.33
		1	2.00	2.00	Nashik	East Nashik	Chandwad	Chandwad	Chandwad	555 to 559	N 20.32837	E 74.24812
		1	2.00	2.00	Nashik	East Nashik	Nandgoan	Nandgoan	Nandgoan	362, 363	N 20.33002	E 74.65361
		1	2.00	2.00	Nashik	East Nashik	Dindori	Dindori	Dindori	Gut no.1265	N 20.21509	E 73.82488
		1	2.00	2.00	Nashik	East Nashik	Kalwan	Kalwan	Kalwan	Gut no.1264	N 20.51494	E 74.02075
		1	2.00	2.00	Nashik	East Nashik	Surgana	Surgana	Surgana	113	N 20.56159	E 73.63743
		1	2.00	2.00	Nashik	East Nashik	Kanashi	Kanashi	Kanashi	100	N- 20.30.58	E- 73.52.24
		1	2.00	2.00	Nashik	East Nashik	Umberthan	Umberthan	Umberthan	33,34,35	N 20.59333	E 73.50769
	Water Hole with Hand Pump	1	1.5	1.50	Nashik	West Nashik	Peint	Amba	Amba	121	N20.383523	E73.505196
		1	1.5	1.50	Nashik	West Nashik	Peint	Peint	Peint	181	N20.256448	E73.532067
		1	1.5	1.50	Nashik	West Nashik	Peint	Peint	Kastvihir	191	N20.218653	E73.501281
		1	1.5	1.50	Nashik	West Nashik	Peint	Peint	Hatrundi	191	N20.19 430	E73.31 155
		1	1.5	1.50	Nashik	West Nashik	Peint	Bhuvan	Ambapani	24	N20.12 799	E73.31 155
		1	1.5	1.50	Nashik	West Nashik	Peint	Bhuvan	Ambapani	12	N20.11 701	E73.29 726
		1	1.5	1.50	Nashik	West Nashik	Peint	Bhuvan	Aadgaon	202	N20.15 495	E73.24 532
		1	1.5	1.50	Nashik	West Nashik	Peint	Savarna	Kayre	98	N20.21 51	E73.25 22
		1	1.5	1.50	Nashik	West Nashik	Peint	Savarna	Surgane	107	N20.34 62	E73.45 01
		1	1.5	1.50	Nashik	West Nashik	Peint	Savarna	Surgane	108	N20.20 30	E73.28 21
		1	1.5	1.50	Nashik	West Nashik	Nanashi	Nanashi	Nanashi	57	N20.21 533	E73.35 778
		1	1.5	1.50	Nashik	West Nashik	Nanashi	Nanashi	Nanashi	57	N20.20 21 520	E73. 35 203
		1	1.5	1.50	Nashik	West Nashik	Nanashi	Nanashi	Nanashi	59	N20.21 32	E73.36 583
		1	1.5	1.50	Nashik	West Nashik	Nanashi	Mahaje	Mahaje	64	N20.17970	E73.35845
		1	1.5	1.50	Nashik	West Nashik	Nanashi	Mahaje	Mahaje	64	N20.18258	E73.36015
		1	1.5	1.50	Nashik	West Nashik	Sinnar	Sinnar	Deshawandi	560	N19.873804	E73.955785
		1	1.5	1.50	Nashik	West Nashik	Sinnar	Sinnar	Jamgaon	553	N19.856975	E73.908112
		1	1.5	1.50	Nashik	West Nashik	Trimbak	Trimbak	Pahine	455	N19.54 38	E73.33 19

Works proposed					Location of work						Latlong	
Rule No.	Item of work	Quantity	Rate	Amount (Rs. in Lakhs	Circle	Division	Range	Round	Beat	Compartment No	Latitude	Longitude
1	2	3	4	5	6	7	8	9	10	11	12	13
	Water Hole with Hand Pump	1	1.5	1.50	Nashik	West Nashik	Trimbak	Trimbak	AshawaliHarsh	459	N19.52 976	E73.30 838
		1	1.5	1.50	Nashik	West Nashik	Igatpuri	Bhandardawadi	Bhandardawadi	611	N1946 707	E73.49 987
		1	1.5	1.50	Nashik	West Nashik	Igatpuri	Bhandardawadi	Bhandardawadi	611	N19 78 163	E73.83 160
		1	1.5	1.50	Nashik	West Nashik	Igatpuri	Bhandardawadi	Dhamani	623	N19 70 626	E73.73 626
		1	1.5	1.50	Nashik	West Nashik	Igatpuri	Bhandardawadi	Dhamani	623	N19 41 904	E73.43 144
		1	1.5	1.50	Nashik	West Nashik	Igatpuri	Igatpuri	Nanggaon Sado	653	N19 41 310	E73.35 270
		1	1.5	1.50	Nashik	West Nashik	Igatpuri	Igatpuri	Igatpuri	661	N19 42 240	E73.32 528
		1	1.5	1.50	Nashik	West Nashik	Igatpuri	Igatpuri	Nanggaon Sado	653	N19 40 400	E73.35 320
		1	1.5	1.50	Nashik	West Nashik	Bhare	Bhanshet	Bhanshet	27	N20 23 981	E73.25 916
		1	1.5	1.50	Nashik	West Nashik	Bhare	Bhanshet	Khardi	27	N20 22 894	E73.25 284
		1	1.5	1.50	Nashik	West Nashik	Bhare	Khokarvr	Khokarvr	27	N20 24 187	E73.26 969
		1	1.5	1.50	Nashik	West Nashik	Bhare	Bhare	Modhalpada	31	N20 24 301	E73.28 7585
		1	1.5	1.50	Nashik	West Nashik	Bhare	Thangaon	Karanjul	20	N20 26 9764	E73.26 4907
		1	1.5	1.50	Nashik	West Nashik	Bhare	Palsan	Bhawada	6	N20 30 1246	E73.28 5408
		1	1.5	1.50	Nashik	West Nashik	Nashik	Anjaneri	Anjaneri	513	N19.57 982	E73.36 205
		1	1.5	1.50	Nashik	West Nashik	Nashik	Anjaneri	Anjaneri	513	N19.58 115	E73.36 355
		1	1.5	1.50	Nashik	West Nashik	Nashik	Mulegaon	Khambala	510	N19.59 005	E73.36 563
		1	1.5	1.50	Nashik	West Nashik	Trimbak	Devgaon	Devgaon	342	N19.82 716	E73.44 25
		1	1.5	1.50	Nashik	West Nashik	Trimbak	Devgaon	TakeDevgaon	3,32,333	N19.46 491	E73.28 50
		1	1.5	1.50	Nashik	West Nashik	Trimbak	Devgaon	Avahata	348	N19.51 356	E73.29 450
	Creation of Water Holes	1	1.00	1.00	Nashik	Malegaon	Taharabad	Salher	Manur	Manur 124	N 20.697958	E 73.861121
		1	1.00	1.00	Nashik	Malegaon	Taharabad	Salher	Manur	Manur 126	N 20.727076	E 73.884378
		1	1.00	1.00	Nashik	Malegaon	Taharabad	Salher	Manur	Manur 127	N 20.696623	E 73.888875
		1	1.00	1.00	Nashik	Malegaon	Taharabad	Salher	Jad	Jad 132	N 20.78936	E 73.998627
		1	1.00	1.00	Nashik	Malegaon	Taharabad	Salher	Jad	Jad 137	N 20.800678	E 73.992611
		1	1.00	1.00	Nashik	Malegaon	Taharabad	Salher	Jad	Jad 137	N 20.80085	E 73.99074
		1	1.00	1.00	Nashik	Malegaon	Taharabad	Salher	Salher	Salher 219	N 20.733615	E 73.935832
		1	1.00	1.00	Nashik	Malegaon	Taharabad	Salher	Salher	Salher 223	N 20.717425	E 73.932532
		1	1.00	1.00	Nashik	Malegaon	Taharabad	Salher	Salher	Salher 223	N 20.717425	E 73.932532
		1	1.00	1.00	Nashik	Malegaon	Taharabad	Mahad	Bilpuri	Vadekhurd 160	N 20.81229	E 74.33521
		1	1.00	1.00	Nashik	Malegaon	Taharabad	Mahad	Bilpuri	Bilpuri 161	N 20.81231	E 74.33619

Works proposed					Location of work						Latlong	
Rule No.	Item of work	Quantity	Rate	Amount (Rs. in Lakhs	Circle	Division	Range	Round	Beat	Compartment No	Latitude	Longitude
1	2	3	4	5	6	7	8	9	10	11	12	13
	Creation of Water Holes	1	1.00	1.00	Nashik	Malegaon	Taharabad	Mahad	Bilpuri	Talwade Bha 163	N 20.79795	E 74.3114
		1	1.00	1.00	Nashik	Malegaon	Taharabad	Mahad	Rahud	Chirai 382	N 20.82494	E 74.37293
		1	1.00	1.00	Nashik	Malegaon	Taharabad	Mahad	Rahud	Bodhari 162	N 20.833393	E 74.324718
		1	0.83	0.83	Nashik	Malegaon	Satana	Dangsaundane	Dahindule	(Dahindule) 238	N20.36.23	E74.03.01
		1	0.83	0.83	Nashik	Malegaon	Satana	Dangsaundane	Dahindule	(Dahindule) 240 pt	N20.36.35	E74.04.14
		2	0.75	1.50	Nashik	Malegaon	Satana	Satana	Kupkheda	(Phopir) 188	N20.79433	E74.335102
		4	0.75	3.00	Nashik	Malegaon	Satana	Satana	Kupkheda	(Ratir) 191	N20.662098	E74.291278
		2	0.75	1.50	Nashik	Malegaon	Satana	Satana	Karhe	(Dodheshwar) 198	N20.72.3528	E74.298438
		2	0.75	1.50	Nashik	Malegaon	Satana	Satana	Karhe	(Kolipada) 190, 199	N20.68104	E74.263159
		1	1.00	1.00	Nashik	Malegaon	Satana	Virgaon	Kersane	(Kersane) 184	N20.42152	E074.06.179
		1	1.00	1.00	Nashik	Malegaon	Satana	Virgaon	Kersane	(Kersane) 184	N20.42.289	E074.06.073
		1	0.75	0.75	Nashik	Malegaon	Satana	Virgaon	Avhati	(Tarsali) 201	N20.39.56	E074.10.09
		1	0.75	0.75	Nashik	Malegaon	Satana	Virgaon	Avhati	(Tarsali) 201	N20.39.57	E074.10.10
		3	1.5	4.500	Nashik	Malegaon	Malegaon (T)	Dahival-4	Chinchgavan	453	N-20.3045	E-74.4340
		2	1.5	3.000	Nashik	Malegaon	Malegaon (T)	Dahival-4	Chinchgavan	447	N-20.3229	E-74.4357
		2	1.5	3.000	Nashik	Malegaon	Malegaon (T)	Karanjgavan	Dahidi	434	N-20.4237	E-74.3343
		2	1.5	3.000	Nashik	Malegaon	Malegaon (T)	Galana	Galana-2	414	N-20.47.10	E-74.30.52
		2	1.5	3.000	Nashik	Malegaon	Malegaon (T)	Virane	Kankrale	167	N-20.4054	E-74.2831
		2	1.5	3.000	Nashik	Malegaon	Malegaon (T)	Dahival-4	Sherul	448	N-20.3450	E-74.4341
		2	1.5	3.000	Nashik	Malegaon	Malegaon (T)	Dahival-5	Zadi	347	N-20.2223	E-74.2457
		2	1.5	3.000	Nashik	Malegaon	Malegaon (T)	Virane	Vitane	428	N-20.4419	E-74.2804
	Total for Creation and maintaenance of water sources/water holes for wildlife	**94.00**		**127.15**								
	Grand Total for activities under not less than 80% component	**3271**		**3840.94**								

Works proposed					Location of work						Latlong	
Rule No.	**Item of work**	**Quantity**	**Rate**	**Amount (Rs. in Lakhs**	**Circle**	**Division**	**Range**	**Round**	**Beat**	**Compartment No**	**Latitude**	**Longitude**
1	**2**	**3**	**4**	**5**	**6**	**7**	**8**	**9**	**10**	**11**	**12**	**13**
5(3)	**Works under not more than 20 % component (Rule 5 (3))**											
5(3)d	**Construction, up-gradation and maintenance of inspection paths, forest roads in forest area, fire lines, watch towers, check posts and timber depots**											
	Construction of new Watch Tower	1.00	10.00	10.00	Nashik	East Nashik	Dindori	Umrale	Gayachi vadi	624	N 20.0716	E 73.4314
		1.00	10.00	10.00	Nashik	East Nashik	Dindori	Umrale	Kochargaon	630	N 20.1929	E 73.3857
		1.00	10.00	10.00	Nashik	East Nashik	Kalwan	Mokbhangi	Nakoda	252	N 20.50737	E 74.036966
		1.00	10.00	10.00	Nashik	East Nashik	Kalwan	Kalwan	Markendpimpri	299	N 20.29876	E 74.11612
	Construction of Naka (Interstate) Protection Camp	1	9.00	9.00	Nashik	East Nashik	Surgana	Surgana	Surgana	113	N 20.56159	E 73.63743
		1	9.00	9.00	Nashik	East Nashik	Umberthan	Umberthan	Umberthan	33,34,35	N 20.59333	E 73.50769
	Check Naka	1	9.00	9.00	Nashik	East Nashik	Surgana	Surgana	Surgana	113	N 20.55814	E 73.64022
	Total for Construction, up-gradation and maintenance of inspection paths, forest roads in forest area, fire lines, watch towers, check posts and timber depots	**7.00**		**67.00**								
5(3) (e)	**Construction of residential and official buildings in forests for front line staffs deployed for protection of forest and wildlife**											
i	Construction of Type I Quarters.	1	22.00	22.00	Nashik	East Nashik	Deola	Deola	Deola	235	N 20.2720256	E 74.1052561
		1	22.00	22.00	Nashik	East Nashik	Dindori	Vani	Vani	364	N 20.19431	E 73.53179
		1	22.00	22.00	Nashik	West Nashik	Nanashi	Bhanwad	Deosane	200	N 20.25.594	E 73.42.934
		1	22.00	22.00	Nashik	West Nashik	Bhare	Bhare	Bhare	73	N 20 26 299	E 073 31 506
		1	22.00	22.00	Nashik	Ahmednagar	Tisgaon	Tisgaon	Tisgaon		N 19.185605	E 74.061756
		1	22.00	22.00	Nashik	Malegaon	Taharabad	Mulher	Mulher		N 20.783322	E 74.0664422
		1	22.00	22.00	Nashik	Malegaon	Taharabad	Mulher	Mulher		N 20.783292	E 74.064247
	Total	**7.00**		**154.00**								
ii	Construction of Type II Quarters.	1	26.00	26.00	Nashik	East Nashik	Deola	Deola	Deola	235	N 20.2720199	E 74.1052470
		1.00	26.00	26.00	Nashik	West Nashik	Nanashi	Mahaje	Mahaje	Nanashi Hqs.	N 20.20.280	E 73.37.170
		1.00	26.00	26.00	Nashik	Ahmednagar	Tisgaon	Tisgaon	Tisgaon	1,24,289	N 19.185733	E 74.062046
		1.00	26.00	26.00	Nashik	Malegaon	Taharabad	Mulher	Mulher	Mulher	N 20.783287	E 74.064303
	Total	**4.00**		**104.00**								

Works proposed					Location of work						Latlong	
Rule No.	**Item of work**	**Quantity**	**Rate**	**Amount (Rs. in Lakhs**	**Circle**	**Division**	**Range**	**Round**	**Beat**	**Compartment No**	**Latitude**	**Longitude**
1	**2**	**3**	**4**	**5**	**6**	**7**	**8**	**9**	**10**	**11**	**12**	**13**
iii	Construction of Type III Quarters.	1.00	36.00	36.00	Nashik	East Division	Kalwan	Kalwan	Kalwan	319	N 20.49348	E 74.02967
		1.00	36.00	36.00	Nashik	East Division	Deola	Deola	Deola	235	N 20.2719269	E 74.1052414
		1.00	36.00	36.00	Nashik	Sangamner	Sangamner I	Pemgiri	Nimaj	-----	N 19.33694	E 74.12402
	Total	**3.00**		**108.00**								
iv	**Construction of Range Office**	1.00	45.00	45.00	Nashik	East Nashik	Deola	Deola	Deola	235	N 20.2719508	E 74.1033303
		1.00	45.00	45.00	Nashik	west Nashik	Mharusal	Mharusal	Mharusal	540	N 20 04 096	E 073 48 718
		1.00	45.00	45.00	Nashik	Ahmednagar	Takali Dhokeshwar	Takali Dhokeshwar	Takali Dhokeshwar		N 19.150818	E 74.382953
		1.00	45.00	45.00	Nashik	Sangamner	Sangamner I	Pemgiri	Nimaj		N 19.33694	E 74.12402
	Total	**4.00**		**180.00**								
v	Amenities for Woman Front Line Staff	1.00	14	14.00	Nashik	East Nashik	Deola	Deola	Deola	235	N 20.2721	E 74.1053
	Total	**1.00**		**14.00**								
	Total for Construction of residential and official buildings in forests for front line staffs deployed for protection of forest and wildlife	**19.00**		**560.00**								
5(3)(i)	**Publicity -cum-awareness programme and exhibition on the various schemes being implemented by the state Authority from state Fund**	Lump sum		2.00	Nashik	East Division	Division	--	---	---	---	---
		Lump sum		2.00	Nashik	West Nashik	Division	---	---	---	---	---
		Lump sum		2.00	Nashik	Ahmednagar	Division	---	---	---	---	---
		Lump sum		2.00	Nashik	Malegaon	Division	---	---	---	---	---
		Lump sum		2.00	Nashik	Sangamner	Division	---	---	---	---	---
	Total for Publicity -cum-awareness programme and exhibition on the various schemes being implemented by the state Authority from state Fund	**0.00**		**10.00**								
	Total for works under not more than 20 % component	**26.00**		**637.00**								
	Grand Total for NPV	**3297**	**0.00**	**4477.94**								

ANNUAL PLAN OF OPERATIONS 2022-23												
FORMAT VII A---- Forestry and other activities proposed under Net Present Value amount (Please see Rule no. 5(2), 5(3), and proviso under Rule 5(3) (NPV - 04)												
Pune Territorial Circle												
Works proposed					Location of work						Latlong	
Sr No.	Item of work	Quantity / Area / Unit	Rate	Amount (Rs. in Lakhs	Circle	Division	Range	Round	Beat	Compartment No	Latitude	Longitude
1	2	3	4	5	6	7	8	9	10	11	12	13
5.2	**Rule Number 5 (2) - 80%**											
a	**assisted natural regeneration**											
1	Plantation work for PMW	20	1.69	33.80	Pune	Junnar	Manchar	Dhamni	Dhamani	285	N-18'90'1852	E-74'03'6211
		18	1.69	30.42	Pune	Junnar	Manchar	Walati	Shingave	243	N-18'99'4896	E-74'10'633
		5	1.69	8.45	pune	Junnar	khed	Khed	Gulani	267	N 18.860948	E73.948687
		10	1.69	16.90	Pune	Junnar	Shirur	Shikrapur	Karandi	303	N- 18.648131	E-74'097413
		10	1.69	16.90	Pune	Junnar	Shirur	Shikrapur	Alegaon paga	306	N- 18.3831	E-74'18.13
		5	1.69	8.45	Pune	Junnar	Shirur	Shirur	Malthan	299	N- 18.4549	E-74'11. 13
		5	1.69	8.45	Pune	Junnar	Shirur	Shirur	Shirur	300	N- 18.823683	E-74'322753
		73		**123.37**								
		40.00	1.69	67.60	Pune	Solapur	Solapur	Solapur	G.kanbas	195	N-17°45'34.35"	E-76°02'16.08"
		10.00	1.69	16.90	Pune	Solapur	Barshi	Vairag	Vairag	311b	N-18 11 15	E-75 53 03
		15.00	1.69	25.35	Pune	Solapur	Barshi	Vairag	Chincholi	310	N-18 06 12	E-75 55 13
		8.00	1.69	13.52	Pune	Solapur	Pandhrpur	Manglwedha	Huljanti	122	N-17.44 72	E-75 38 78
		20.00	1.69	33.80	Pune	Solapur	Sangola	Sangola	katfal	91 pt.	N-17.54 49 34	E-74.96 27 45
		20.00	1.69	33.80	Pune	Solapur	Sangola	Sangola	katfal	91pt.	N-17.58 32 45	E-75.00 62 77
		20.00	1.69	33.80	Pune	Solapur	Sangola	Sangola	Achakdani	109pt.	N-17.32.254	E-75.02 157
		20.00	1.69	33.80	Pune	Solapur	Sangola	Sangola	Achakdani	109pt.	N-17.32.138	E-75.02 207
		30.00	1.69	50.70	Pune	Solapur	Sangola	Sangola	Achakdani	107b pt	N-17.29 012	E-75.03 044
		10.00	1.69	16.90	Pune	Solapur	Sangola	Junoni	H.M.wadi	163pt	N-17.15 104	E-75.41 61
		20.00	1.69	33.80	Pune	Solapur	Malshiras	Piliv	Piliv	97 b pt	N-17.67 9339	E-74.899718
		213.00		**359.97**								
	Total (a) PPO	**286.00**		**483.34**								

Works proposed					Location of work						Latlong	
Sr No.	Item of work	Quantity / Area / Unit	Rate	Amount (Rs. in Lakhs	Circle	Division	Range	Round	Beat	Compartment No	Latitude	Longitude
1	2	3	4	5	6	7	8	9	10	11	12	13
b	artificial regeneration											
2	artificial regeneration (by plantations 4th YO); Model No. 3 mandays 38.50 Wages Rate 439.725	5	0.180	0.90	Pune	Pune	Pune	Lonikalbhor	Lonikalbhor	281	N 18 26 229	E 73 93 93 25
		5	0.180	0.90	Pune	Pune	Pune	Lonikalbhor	Dudulgoan	278	N 18 671 418	E 73 86 914
		15	0.180	2.70	Pune	Pune	Pune	Aalandi Chorachi	Vadgoan Shinde	87	N 18 63 04 27	E 73 93 816254
		25	0.180	4.50	Pune	Pune	Pune	Khedshivapur	Khedshivapur	87	N 18 22 28	E 73 48 2
		15	0.180	2.70	Pune	Pune	Indapur	Junction	Kalas	815	N 18.9.49	E 75.438
		10	0.180	1.80	Pune	Pune	Indapur	Junction	Kalas	4,29,428	N 18.08.37	E 74.5718
		25	0.180	4.50	Pune	Pune	Indapur	Indapur	Bijwadi	F.G. 33	N 18.10.8	E 74.57.30
		50	0.180	9.00	Pune	Pune	Indapur	Indapur	Bijwadi	F.G. 59	N 18.10.8	E 74.57.30
		20	0.180	3.60	Pune	Pune	Indapur	Indapur	Indapur	F.G.	N 18.10.15	E 74.57.21
		30	0.180	5.40	Pune	Pune	Indapur	Indapur	Bijwadi	F.G. 59	N 18.10.8	E 74.57.30
		200		**36.00**								
		2	0.180	0.36	Pune	Junnar	Otur	A'gavhan	A'gavhan	29	N 19 19. 523	E 74 00. 835
		2	0.180	0.36	Pune	Junnar	Otur	A'gavhan	Chilhewadi	25, 26	N 19 20. 235	E 73 59. 156
		3	0.180	0.54	Pune	Junnar	Otur	P.joga	P.joga	8	N 19 21. 107	E 73 50. 810
		6	0.180	1.08	Pune	Junnar	Otur	Otur	Otur	22	N 19 18. 743	E 73 58. 588
		15	0.180	2.70	Pune	Junnar	Otur	Otur	Udapur	18	N 19 18. 207	E 73 25. 934
		20	0.180	3.60	Pune	Junnar	Otur	Ale	Pimpri Pendhar	36	N 19 13. 834	E 74 03. 993
		5	0.180	0.90	Pune	Junnar	Otur	Otur	Udapur	18	N 19 17. 721	E 73 57. 052
		20	0.180	3.60	Pune	Junnar	Otur	Khodad	Khodad	311	N 19 08. 325	E 74 01. 846
		10	0.180	1.80	Pune	Junnar	Otur	Ale	Rajuri	44	N 19 09. 273	E 74 10. 274
		10	0.180	1.80	Pune	Junnar	Otur	Belha	Pargaon T.Ale	115	N 19 02. 198	E 74 07. 506
		15	0.180	2.70	Pune	Junnar	Otur	Otur	Otur	22-A	N 19 18. 097	E 73 57. 017
		10	0.180	1.80	Pune	Junnar	Mnchar	Lakhangaon	Lakhangaon	287	N 18 55. 218	E 74 08. 128
		15	0.180	2.70	Pune	Junnar	Junnar	N'gaon	Ozar	46	N 19 13. 425	E 73 56. 605
		5	0.180	0.90	Pune	Junnar	Junnar	N'gaon	Ozar	45	N 19 13. 126	E 73 26. 918
		5	0.180	0.90	Pune	Junnar	Shirur	Shikrapur	Alegaon paga	306	N 18 38. 277	E 74 18. 033

Works proposed					Location of work						Latlong	
Sr No.	Item of work	Quantity / Area / Unit	Rate	Amount (Rs. in Lakhs	Circle	Division	Range	Round	Beat	Compartment No	Latitude	Longitude
1	2	3	4	5	6	7	8	9	10	11	12	13
2	artificial regeneration (by plantations 4th YO); Model No. 3 mandays 38.50 Wages Rate 439.725	5	0.180	0.90	Pune	Junnar	Shirur	Pimprkhed	Pimparkhed	289	N 18 58. 608	E 73 09. 181
		24	0.180	4.32	Pune	Junnar	G'gaon	Tirpad	Nahaved	141	N 19 10. 934	E 73 38.058
		15	0.180	2.70	Pune	Junnar	Khed	Khed	Donde	261	N 18 54. 542	E 73 48.545
		25	0.180	4.50	Pune	Junnar	Chakan	Alandi	Vdgaon Ghened	267	N 18 42 153	E 73 55.836
		15	0.180	2.70	Pune	Junnar	Chakan	Amboli	Wandre	222	N 18 58. 719	E 73 32. 297
		23	0.180	4.14	Pune	Junnar	Chakan	Alandi	Koyali T.Chakan	270	N 18 42 691	E 73 59.613
		250.00		**45.00**								
		10	0.180	1.80	Pune	Bhor	saswad	saswad	bopgao	548	N 18 07 72 58	E 73 74 95 25
		20	0.180	3.60	Pune	Bhor	velha	Ambavane	vinzar	362	N 18.282403	E 73.740247
		10	0.180	1.80	Pune	Bhor	Nasarapur	Kikavi	bhongavali	497	N 18.198505	E 74.029416
		10	0.180	1.80	Pune	Bhor	bhor	hirdoshi	Rayari	456/457	N 18.074482	E 73.748633
		50.00		**9.00**								
		20	0.180	3.60	Pune	Solapur	Solapur	Mandrup	G.Kanbas	574	N 17.74898	E 76.056295
		40	0.180	7.20	Pune	Solapur	Sangola	Sangola	Sangola	114	N 17.57105	E 75.205936
		50	0.180	9.00	Pune	Solapur	Malshiras	Natepute	Fondshiras	833	N 17.821	E 74.92642
		10	0.180	1.80	Pune	Solapur	Malshiras	Piliv	Piliv	1327	N 17.66431	E 74.961168
		40	0.180	7.20	Pune	Solapur	Malshiras	Malshiras	Easlampur	353	N 17.78783	E 74.889194
		50	0.180	9.00	Pune	Solapur	Malshiras	Pliv	Piliv	236	N 17.641023	E 75.002513
		30	0.180	5.40	Pune	Solapur	Solapur	Akkalkot	Mendargi	174	N 17.461863	E 76.2546
		10	0.180	1.80	Pune	Solapur	Solapur	Akkalkot	Waghdari	31	N 17.461863	E 76.214652
		250.00		**45.00**								
	TOTAL 4thYO	**750.00**		**135.00**								
A2	Dehu Bhandara Dongar development area in Vadgaon range (Fifth Year Plantaion)	3	0.181	0.543	Pune	Pune	Vadgaon	Vadgaon	Vadgaon	99 Part	N 18 75 638	E 73 75 275
		4	0.181	0.724	Pune	Pune	Vadgaon	Vadgaon	Vadgaon	94 Part	N 18 69 595	E 73 70 85
		4	0.181	0.724	Pune	Pune	Vadgaon	Vadgaon	Nigde	19	N 18 74 393	E 73 73 65
	TOTAL 5th YO -	**11**	**0.543**	**1.991**								
	Total B	**761.00**		**136.99**								

Works proposed					Location of work						Latlong	
Sr No.	Item of work	Quantity / Area / Unit	Rate	Amount (Rs. in Lakhs	Circle	Division	Range	Round	Beat	Compartment No	Latitude	Longitude
1	2	3	4	5	6	7	8	9	10	11	12	13
5 (2) (c)	**silvicultural operations in forests;**											
i)	Fodder Plantion at Solapur Division FYO	40.00	1.08	43.22	Pune	Solapur	Malshiras	Natepute	Fadtari	536	N -17.52 306	E-74.44 088
		30.00	1.08	32.42	Pune	Solapur	Malshiras	Malshiras	Malshiras	756	N -17.82.2499	E-74.93 7258
		20.00	1.08	21.61	Pune	Solapur	Malshiras	Natepute	Fadtari	101	N -17.05 0075	E-74.44.301
		20.00	1.08	21.61	Pune	Solapur	Malshiras	Piliv	Maloli	272	N -17.72 3318	E-75.022409
		10.00	1.08	10.81	Pune	Solapur	Malshiras	Natepute	Fadtari	604	N -17.49 143	E-74.43418
		10.00	1.08	10.81	Pune	Solapur	Malshiras	Natepute	Natepute	242	N -17.53 306	E-74.44 387
		10.00	1.08	10.81	Pune	Solapur	Malshiras	Malshiras	Islampur	52	N -17.78 0663	E-74.899584
		10.00	1.08	10.81	Pune	Solapur	Barshi	Pangri	Koregaon	248pt	N -18.26 0809	E-75.45 1161
		10.00	1.08	10.81	Pune	Solapur	Barshi	Pangri	Koregaon	249pt	N -18.24 1789	E-75.45 5982
		25.00	1.08	27.01	Pune	Solapur	Sangola	Sangola	katfal	962	N -17.57 7329	E-74.96 3712
		10.00	1.08	10.81	Pune	Solapur	Sangola	Sangola	Achakdani	220	N -17.29012	E-75.03 044
		10.00	1.08	10.81	Pune	Solapur	Sangola	Kole	Kole	24	N -17.18 5865	E-74.93 8672
	Total	**205.00**	**1.08**	**221.51**								
ii	Fodder Development (SYO Works)	3	0.73	2.19	Pune	Pune	Daund	Daund	Kurkumbha	Gut no 577	N -18.394745	E-74.510473
		2	0.73	1.46	Pune	Pune	Daund	Daund	Daund	Gut no 491	N -18.413198	E-74.549293
		2	0.73	1.46	Pune	Pune	Indapur	Jankashan	Shelgaon-Kadbanwadi	s.no. 64	N - 18.14269	E-74.837335
		3	0.73	2.19	Pune	Pune	Indapur	Jankashan	Shelgaon-Kadbanwadi	s.no. 64	N - 18.1374	E-74.838502
		5	0.73	3.65	Pune	Pune	Baramati	Baramati	Baramati	Gut no 100	N -18° 11'41",	E-74,35'50'
		5	0.73	3.65	Pune	Pune	Baramati	Baramati	Baramati	Gut no 329	N -18° 9'43",7	E-438'26"
		10	0.73	7.30	Pune	Pune	Pune	Lonikalbhor	Lonikalbhor	290 292	N - 18.4381	E-74.0054
		30		**21.90**								
		25	0.73	18.25	Pune	Solapur	Solapur	Solapur	Solapur	353 354	N 17.572454	E 75.919487
		10	0.73	7.30	Pune	Solapur	Mohal	Mohol	Modnib	85	N 18.272402	E 75.226675
		25	0.73	18.25	Pune	Solapur	Malshiras	Natepute	Fadtari	43pt	N 17.86752	E 74.730352

Works proposed					Location of work						Latlong	
Sr No.	Item of work	Quantity / Area / Unit	Rate	Amount (Rs. in Lakhs	Circle	Division	Range	Round	Beat	Compartment No	Latitude	Longitude
1	2	3	4	5	6	7	8	9	10	11	12	13
ii	Fodder Development (SYO Works)	25	0.73	18.25	Pune	Solapur	Malshiras	Malshiras	Malshiras	70	N 17.80317	E 74.8979
		25	0.73	18.25	Pune	Solapur	Malshiras	Piliv	Piliv	97B Pt	N 17.650501	E 74.900778
		15	0.73	10.95	Pune	Solapur	Malshiras	Malshiras	Malshiras	756	N 17.802802	E 74.897578
		15	0.73	10.95	Pune	Solapur	Pandharpur	Pandharpur	Pandharpur	71	N 17.417	E 75.2829
		7	0.73	5.11	Pune	Solapur	Pandharpur	Pandharpur	Pandharpur	73	N 17.605155	E 75.54116
		4	0.73	2.92	Pune	Solapur	Pandharpur	Pandharpur	Pandharpur	83	N 17.656334	E 75.191258
		15	0.73	10.95	Pune	Solapur	Pandharpur	Pandharpur	Karkamb	60	N 17.801154	E 75.243979
		20	0.73	14.60	Pune	Solapur	Pandharpur	Mangalwedha	Salgar	183	N 17.255553	E 75.527115
		20	0.73	14.60	Pune	Solapur	Pandharpur	Pandharpur	Pandharpur	86	N 17.299553	E 75.527115
		10	0.73	7.30	Pune	Solapur	Sangola	junoni	kidbisari	158	N 17.528231	E 75.031851
		20	0.73	14.60	Pune	Solapur	Sangola	Sangola	mahud	151p	N 17.548543	E 75.035897
		10	0.73	7.30	Pune	Solapur	Sangola	Sangola	Sangola	111p	N 17.624129	E 75.070969
		10	0.73	7.30	Pune	Solapur	Sangola	Sangola	katfal	158	N 17.555571	E 71.985685
		10	0.73	7.30	Pune	Solapur	Sangola	sangola	katfal	158	N 17.559332	E 74.983842
		20	0.73	14.60	Pune	Solapur	Sangola	Sangola	Mahud	90	N 17.17692	E 74.911314
		286		**208.78**								
	Total	**316.00**		**230.68**								
iii	Cutback operation	10	0.04	0.40	Pune	Junnar	Chakan	Alandi	Markal	366	N 18 68 02 54	E 73 95 10 43
		10	0.04	0.40	Pune	Junnar	Chakan	parsul	solu	365	N 18 40.682	E 73 57.101
		25	0.1	2.50	Pune	Junnar	Khed	Tokavade	Bhomale	309	N19.020714	E 73.578390
		25	0.1	2.50	Pune	Junnar	Khed	Washere	Washere	296	N18 ° 56'02"	E 73°41'50"
		20	0.1	2.00	Pune	Junnar	Khed	Bibi	Bibi	300	N19.014402	E 73.772647
	Total	**90**		**7.80**								
	Total C for Silvicultural operations in forests	**611**	**1.08**	**459.99**								

Works proposed					Location of work						Latlong	
Sr No.	Item of work	Quantity / Area / Unit	Rate	Amount (Rs. in Lakhs	Circle	Division	Range	Round	Beat	Compartment No	Latitude	Longitude
1	2	3	4	5	6	7	8	9	10	11	12	13
5 (2) (d)	protection of plantations and forests;											
i	Encroachemnt removal and Forest Protection											
	TCM	175.00	0.40083	70.15	Pune	Solapur	Solapur	Akkalkot	Waghdari	195	N-17.63' 55.35"	E-76. 36' 10.28"
	TCM	150.00	0.40083	60.12	Pune	Solapur	Solapur	Solapur	G.kanbas	344pt	N-17.45' 19.55"	E-76. 01' 50.54"
	TCM	15.00	0.40083	6.01	Pune	Solapur	Barshi	Vairag	Pangaon	256	N 18°10'52.28"	75°42'18.91"E
	TCM	10.00	0.40083	4.01	Pune	Solapur	Barshi	Vairag	Pangaon	259	18°10'36.98"N	75°41'57.06"E
	TCM	100.00	0.40083	40.08	Pune	Solapur	Barshi	Vairag	Pangaon	261pt	18° 7'32.15"N	75°38'51.17"E
	TCM	30.00	0.40083	12.02	Pune	Solapur	Barshi	Vairag	Chincholi	309	18°14'32.90"N	75°55'35.00"E
	TCM	15.00	0.40083	6.01	Pune	Solapur	Barshi	Vairag	Chincholi	310	18°11'30.50"N	75°52'59.04"E
	TCM	6.00	0.40083	2.40	Pune	Solapur	Barshi	Pangari	Dhamngaon	257	18°14'8.60"N	75°36'22.91"E
	TCM	15.00	0.40083	6.01	Pune	Solapur	Barshi	Pangri	Dhamngaon	258	18°10'56.48"N	75°38'3.54"E
	TCM	10.00	0.40083	4.01	Pune	Solapur	Pandhrpur	Manglwedha	Huljanti	122	N 17.26465	E 75.23114
	TCM	15.00	0.40083	6.01	Pune	Solapur	Pandhrpur	Manglwedha	Huljanti	116	N 17.27416	E 75.19175
	TCM	5.00	0.40083	2.00	Pune	Solapur	Pandharpur	Manglwedha	Huljanti	146	N 17.244601	E 75.35576
	TCM	50.00	0.40083	20.04	Pune	Solapur	Sangola	Sangola	katfal	91pt.	N 17.582949	E 75.005971
	TCM	40.00	0.40083	16.03	Pune	Solapur	Sangola	Sangola	Achakdani	109pt.	N 17.310934	E 7501.149
	TCM	30.00	0.40083	12.02	Pune	Solapur	Sangola	Sangola	Achakdani	107bpt	N 1731.269	E 7501.74
	TCM	10.00	0.40083	4.01	Pune	Solapur	Sangola	Junoni	H.M.wadi	163pt	N 17.15104	E 75.04161
	TCM	15.00	0.40083	6.01	Pune	Solapur	Sangola	Junoni	H.M.wadi	170	N 17.19421	E 75.08293
	TCM	40.00	0.40083	16.03	Pune	Solapur	Malshiras	Natepute	Padtare	45pt	N17.48'029"	E 74.41'524"
	TCM	40.00	0.40083	16.03	Pune	Solapur	Malshiras	Malshiras	Jalbhavi	47pt	N17.77'9098"	E 74.77'8207"
	TCM	60.00	0.40083	24.05	Pune	Solapur	Malshiras	Malshiras	Jalbhavi	48pt	N17.73'8924"	E 74.83'8085"
	Total (d i)	**831.00**		**333.09**	**0**	**0**	**0**	**0**	**0**	**0**	**0**	0

Works proposed					Location of work						Latlong	
Sr No.	Item of work	Quantity / Area / Unit	Rate	Amount (Rs. in Lakhs	Circle	Division	Range	Round	Beat	Compartment No	Latitude	Longitude
1	2	3	4	5	6	7	8	9	10	11	12	13
ii	**Survey, Demarcation and Fencing of Sensitive Forest Areas**											
	Chainlink Fencing At Dhayri around Forest Area	4100	0.015	24.00	Pune	Pune	Bhamburda	Donje	Nandoshi	Sr.no.2,4,32	N 18 41 84 62	E 73 82 35 95
	Chainlink Fencing At Undawadi supe around Forest Area	4100	0.015	24.00	Pune	Pune	Baramati	Baramati	Undwadi supe		N 18 30 64	E74 51 99
		8200		**48.00**								
	Chainlink fencing	4200	---	58.61	Pune	Junnar	Chakan	Chakan	Ambethan	350	N 18 48 43	E 73 49 13
	Chainlink fencing	2000	--	27.8	Pune	Junnar	Chakan	Chakan	Chakan	355	N 18 43 17	E 73 52 27
		6200		**86.41**								
	Chainling Fencing For Bholawade Eco Tourism Project	400	50	8.00	Pune	Bhor	Bhor	Bhor	Bholawade		N 181000	E 735001
	Chainling Fencing at Solpur Range	2000	0	60.00	Pune	Solapur	Solapur	S.Solapur	Solapur	170, 171	N 17°28'33.02" N 17°27'55.96"	E 76° 1'21.18" E 76° 0'46.37"
	Chainling Fencing at Solpur Range	1000	0	30.00	Pune	Solapur	Solapur	S.Solapur	Solapur	117, 118	N 17°42'12.39" N 17°42'10.65"	E 75°49'17.99" E 75°49'37.00"
	RCC Wall to RFO Pandharpur at kasegaon	110	0	7.00	Pune	Solapur	Pandharpur	Pandhapur	Kasegaon	2109	N 17°37'11.24"	E 75°18'35.03"
	RCC Wall to RFO Pandharpur at kasegaon	740	0	49.00	Pune	Solapur	Pandharpur	Pandhapur	Kasegaon	2109	N 17°37'31.52"	E 75°18'24.57"
	RCC Wall to RFO Malshiras at Natepute	1800	0	50.00	Pune	Solapur	Malshiras	Natepute	Natepute		N 17°53'37.85"	E 74°46'16.55"
	RCC Wall to RFO Malshiras at Natepute	1500	0	50.00	Pune	Solapur	Malshiras	Natepute	Natepute		N 17°53'46.56"	E 74°46'20.47"
	RCC Wall to RFO Solapur at Boramani	2000	0	110.00	Pune	Solapur	Solapur	N.Solapur	G.Kanbas	769	N 17°45'36.06"	E 76° 2'9.93"
	RCC Wall to Rfo Solapur at Kasbe Solapur	1000	0	65.00	Pune	Solapur	Solapur	S. Solapur	Solapur	10	N 17°37'58.67"	E 75°53'7.28"
		10150		**421.00**								
	Total	**24950**		**563.41**								

Works proposed					Location of work						Latlong	
Sr No.	Item of work	Quantity / Area / Unit	Rate	Amount (Rs. in Lakhs	Circle	Division	Range	Round	Beat	Compartment No	Latitude	Longitude
1	2	3	4	5	6	7	8	9	10	11	12	13
	Cement Pillars Class-I at Bhamburda Range	10	0.08	0.80	Pune	Pune	Bhamburda	Donje	Nandoshi	Sr.no.2,4,32	18 41 65 62 -	E 73 82 35 95
	Boundry Piller Class - I	10	0.08	0.80	Pune	pune	Shirota	Vahangaon	Kalhat	13,14,23,24,26 PT	N- 1881365	E - 736078
	Boundry pillars Class - I in Deoulwadi	10	0.08	0.80	Pune	Pune	Baramati	KARANJE	KARANJE	148	N 18 14 67	E 74 26 19
	Boundry Piller Class - I	10	0.08	0.80	Pune	Pune	Indapur	Indapur	Bijwadi	Gagargaon 59, 45, 33	N 19 05 54	E 74 13 10
	Boundry Piller Class - I	10	0.08	0.80	Pune	Pune	Indapur	Junction	Kalas	Bharnewadi - 1272	N 18.7.12	E 74.47.16
		50		**4.00**								
	Install New Cement Pillars Class- II At Bhamburda Range	25	0.04	1.00	Pune	Pune	Bhamburda	Donje	Nandoshi	Sr.no.2,4,32	N 18 41 65 62 -	E 73 82 35 95
	Boundry Piller Class -I I	25	0.04	1.00	Pune	pune	Shirota	Vahangaon	Kalhat	13,14,23,24,26 PT	N- 1881365	E - 736078
	Boundry pillars Class -I I in Deoulwadi	25	0.04	1.00	Pune	Pune	Baramati	KARANJE	KARANJE	148	N 18 14 67	E 74 26 19
	Boundry Piller Class -I I	25	0.04	1.00	Pune	Pune	Indapur	Indapur	Bijwadi	Gagargaon 59, 45, 33	N 19 05 54	E 74 13 10
	Boundry Piller Class -I I	25	0.04	1.00	Pune	Pune	Indapur	Junction	Kalas	Bharnewadi - 1272	N 18.7.12	E 74.47.16
		125		**5.00**								
	Construction, upgradation and maintenance of :											
	Protection Hut G+1	5	20	100	Pune	Pune	Bhamburda	Pachgaon Parvati	Kothrud	96	N 18.52.83	E- 73,82.23
	Bhamburda - Construction of 1 New Labour shed at Bhamburda in Bhmburda range	1	6.00	6.00	Pune	Pune	Bhamburda	Pachgaon Parvati	Kothrud	96	N 18.52.83	E- 73,82.23
	Labour Shed	1	6	6.00	Pune	Solapur	Solapur	Akkalkot	Waghdari		N-17.56'32.96"	E-76.12'60.46"
	Labour Shed	1	6	6.00	Pune	Solapur	Barshi	Vairag	Pangaon		18° 9'33.91"N	75°43'48.91"E
	Labour Shed	1	6	6.00	Pune	Solapur	Sangola	Sangola	Achkdani		N 17.31269	E 75.0174
		9		**124.00**								

Works proposed					Location of work						Latlong	
Sr No.	Item of work	Quantity / Area / Unit	Rate	Amount (Rs. in Lakhs	Circle	Division	Range	Round	Beat	Compartment No	Latitude	Longitude
1	2	3	4	5	6	7	8	9	10	11	12	13
vi	**Improving mobility of frontline staff by providing vehicles for forest protection and patrolling**	LS		2.00	Pune	Pune						
		LS		2.00	Pune	Junnar						
		LS		2.00	Pune	Bhor						
		LS		2.00	Pune	Solapur						
	Total	**0.00**		**8.00**								
	Total (d)	**25965.00**		**1037.50**								
5 (2) (e)	**pest and disease control in forest;**											
	63 Ha. , 2000 Rs per ha.	25	0.03	0.75	Pune	Junnar	Chakan	Alandi	Vdgaon Ghened	364	N 18 42 07.0,	E 73 55 45.2
		15	0.03	0.45	Pune	Junnar	Chakan	Amboli	Wandre	319	N 18 58 41.8	E 73 32 18.5
		23	0.03	0.69	Pune	Junnar	Chakan	Alandi	Koyali T.Chakan	368	N 18 42 37.5	E 73 59 35 8
	Total (e)	**63**		**1.89**								
5 (2) (f)	**forest fire prevention and control operations;**											
ii	**Cutting and burning of fire lines 80% amount prasose and 20% amount is praposed in 5 (3) (d)**											
	Fire Line Aagalambe In Bhamburda Range	27	0.08	2.16	Pune	Pune	Bhamburda	Donje	Aagalambe	180 181, 182	N 18 967725	E 73 52646
	Khadakwasala Fireline	11.00	0.08	0.88	Pune	Pune	Bhamburda	Donje	Khadakwasala	268	N 18.42671	E 7378036
	Nandoshi Fireline	40.00	0.08	3.20	Pune	Pune	Bhamburda	Donje	Nandoshi	27,32,72,271	N 18.'24'30'	E 73'47'24'
	Mandvi Fireline	4.00	0.08	0.32	Pune	Pune	Bhamburda	Donje	Mandvi	gut no. 16,2	N 18.416236	E 73.70855
	Dhairi Fireline	27.00	0.08	2.16	Pune	Pune	Bhamburda	Donje	Dhairi	2,78,279	N1840991	E 18.4117
	Naygaon Fireline	4.5	0.08	0.36	Pune	Pune	Vadgaon	Vadgaon	Vadgaon	36	N 18.4351	E 73.3502
	Pachane Fireline in Vadgaon Range	9	0.08	0.72	Pune	Pune	Vadgaon	Vadgaon	Bebadohal	921	N 18.3655	E 73.3754
	Navlakh Umbre Fireline in Vadgaon Range	9	0.08	0.72	Pune	Pune	Vadgaon	Vadgaon	Naulakhumabr	16 ŸÖê 20	N 18.8253	E73.3753
	Bebadohal Fireline in Vadgaon Range	6.3	0.08	0.50	Pune	Pune	Vadgaon	Vadgaon	Bebadohal	97	N 18.4033	E73.3728
	Aundhe Firelinein Vadgaon Range	1.8	0.08	0.14	Pune	Pune	Vadgaon	Devale	Pimplal khute	44	N ९८.७२३२४	E ७३.४३३७६
	Sate Firelinein Vadgaon Range	1.8	0.08	0.14	Pune	Pune	Vadgaon	Vadgaon	Vadgaon	193	N 18.4431	E 73.3640
	Dhamane Firelinein Vadgaon Range	1.8	0.08	0.14	Pune	Pune	Vadgaon	Vadgaon	Bebadohal	48,49	N 18.4021	E73.3907
	Jambhawade Fireline in Vadgaon Range	3	0.08	0.24	Pune	Pune	Vadgaon	Vadgaon	Nigade	20	N ९८.४६०९	E ७३.४३३४

Works proposed					Location of work						Latlong	
Sr No.	Item of work	Quantity / Area / Unit	Rate	Amount (Rs. in Lakhs	Circle	Division	Range	Round	Beat	Compartment No	Latitude	Longitude
1	2	3	4	5	6	7	8	9	10	11	12	13
	Kurvande Fireline in Vadgaon Range	18	0.08	1.44	Pune	Pune	Vadgaon	Lonavala	Kurvande	195	N १८.४४ ५१	E ७३.२२ २३
	Kurvande Fireline in Vadgaon Range	4.5	0.08	0.36	Pune	Pune	Vadgaon	Lonavala	Kurvande	253	N १८.४४ १६	E ७३.२१ २०
	Kurvande Fireline in Vadgaon Range	3	0.08	0.24	Pune	Pune	Vadgaon	Lonavala	Kurvande	1,25,151	N १८.४४ ०३	E ७३.२१ ०६
	Kurvande Fireline in Vadgaon Range	1.8	0.08	0.14	Pune	Pune	Vadgaon	Lonavala	Kurvande	207	N १८.४४ ०३	E ७३.२१ ०६
	Aatwan Fireline in Vadgaon Range	1.3	0.08	0.10	Pune	Pune	Vadgaon	Lonavala	Aatwan	32,33,34	N १८.४० ३८	E ७३.२३ २६
	Aatwan Fireline in Vadgaon Range	1.3	0.08	0.10	Pune	Pune	Vadgaon	Lonavala	Aatwan	18,19,20	N १८.४१ ०७	E ७३.२३ ४७
	Aatwan Fireline in Vadgaon Range	9	0.08	0.72	Pune	Pune	Vadgaon	Lonavala	Aatwan	37	N १८.४१ ५५	E ७३. २३ २१
	Gewande Fireline in Vadgaon Range	3	0.08	0.24	Pune	Pune	Vadgaon	Lonavala	Aatwan	1,64,164	N १८.४२ २८	E ७३. २४ ४७
	Malwandi Fireline in Vadgaon Range	2.7	0.08	0.22	Pune	Pune	Vadgaon	Devale	Pimpal khunte	25	N 18.40 44	E73.3406
	Malwandi Fireline in Vadgaon Range	3.7	0.08	0.30	Pune	Pune	Vadgaon	Devale	Pimpal khunte	76	N 18.3933	E73.3210
	Done Fireline in Vadgaon Range	3.6	0.08	0.29	Pune	Pune	Vadgaon	Devale	Pimpal khunte	21,22,23	N 18.3910	E73.3419
	Yelghol dhan Fireline in Vadgaon Range	4.5	0.08	0.36	Pune	Pune	Vadgaon	Devale	Pimpal khunte	18,19,20	N १८.६६६७	E ७३.५६०६
	Majgaon Fireline in Vadgaon Range	2.7	0.08	0.22	Pune	Pune	Vadgaon	Devale	Chavsar	12,41,25	N १८.४०१०	E ७३.२८४७
	Chikhalse Fireline in Vadgaon Range	4.5	0.08	0.36	Pune	Pune	Vadgaon	Devale	Chikhalse	244	N 18.7331	E 73.5774
	Shivne Fireline in Vadgaon Range	3.6	0.08	0.29	Pune	Pune	Vadgaon	Devale	Pimpal khunte	281	N 18.4013	E73.3529
		212.80		**17.06**								
	Fire line- Chakan Range	20	0.02	0.40	Pune	Junnar	Chakan	Amboli	Amboli	321	N 18 55 32	E 73 33 00
		20	0.02	0.40	Pune	Junnar	Chakan	Amboli	Torne Khurd	322	N 18 55 54	E 73 33 00
		20	0.02	0.40	Pune	Junnar	Chakan	parsul	Kharpud	326	N 18 00 39	E 73 33 49
		10	0.02	0.20	Pune	Junnar	Chakan	Parsul	Kude	328	N 18 57 21	E 73 39 33
		40	0.02	0.80	Pune	Junnar	Chakan	Parsul	Parsul	329	N 18 59 03	E 73 36 37
		20	0.02	0.40	Pune	Junnar	Chakan	Chakan	Wahagaon	343	N 18 51 01	E 73 39 24
		20	0.02	0.40	Pune	Junnar	Chakan	Chakan	Ambethan	350	N 18 50 10	E 73 41 04
		20	0.02	0.40	Pune	Junnar	Chakan	Chakan	Chakan	355	N 18 43 17	E 73 52 27
		30	0.02	0.60	Pune	Junnar	Chakan	Chakan	Bhose	357	N 18 43 01	E 73 54 28
		40	0.02	0.80	Pune	Junnar	Chakan	Alandi	Charholi khurd	362	N 18 41 43	E 73 52 27
		10	0.02	0.20	Pune	Junnar	Chakan	Alandi	Wadgaon Ghenand	364	N 18 41 17	E 73 52 27
		10	0.02	0.20	Pune	Junnar	Chakan	Alandi	Koyali	368	N 18 45 52	E 74 00 35

Works proposed					Location of work						Latlong	
Sr No.	Item of work	Quantity / Area / Unit	Rate	Amount (Rs. in Lakhs	Circle	Division	Range	Round	Beat	Compartment No	Latitude	Longitude
1	2	3	4	5	6	7	8	9	10	11	12	13
	Fire line- Ghodegaon Range	6	0.02	0.12	Pune	Junnar	Ghodegaon	Ghodegaon	Ghodegaon	205	N 19.024120	E 73.836526
		6	0.02	0.12	Pune	Junnar	Ghodegaon	Ghodegaon	Ghodegaon	204	N 19.028702	E 73.785005
		6	0.02	0.12	Pune	Junnar	Ghodegaon	Ghodegaon	Girawali	199	N 19.066751	E 73.850063
		3	0.02	0.06	Pune	Junnar	Ghodegaon	Shinoli	pokhari	184	N 19.084608	E 73.727971
		8	0.02	0.16	Pune	Junnar	Ghodegaon	Shinoli	Dimbhe kh	187	N 19.068765	E 73.735502
	Fire line-Junnar Range (in km.)	3.6	0.02	0.07	Pune	Junnar	Junnar	Alame	Godre	84	N 19" 14' 48	E 73" 48' 52
		1.5	0.02	0.03	Pune	Junnar	Junnar	Alame	Godre	84	N 19" 14' 45	E 73" 49' 02
		4.4	0.02	0.09	Pune	Junnar	Junnar	Alame	Godre	83	N 19 16' 23"	E 73 49'37"
		0.4	0.02	0.01	Pune	Junnar	Junnar	Alame	Godre	82	N 19 14' 41"	E 73" 51' 58
		4	0.02	0.08	Pune	Junnar	Junnar	Alame	Godre	81	N 19 14' 40"	E 73 52' 59"
		4.5	0.02	0.09	Pune	Junnar	Junnar	Alame	Alame	25	N 19" 16' 57	E 73" 53' 45
		1.6	0.02	0.03	Pune	Junnar	Junnar	Alame	Alame	79	N 19 14' 35"	E 73 53' 02"
		5	0.02	0.10	Pune	Junnar	Junnar	Alame	Alame	80	N 19 15' 36"	E 73 52' 14"
		0.5	0.02	0.01	Pune	Junnar	Junnar	Alame	Alame	78	N 19 15' 18"	E 73 54' 09"
		0.5	0.02	0.01	Pune	Junnar	Junnar	Alame	Alame	77	N 15 14' 03"	E 73 55' 06"
		1	0.02	0.02	Pune	Junnar	Junnar	Alame	Alame	76	N 19 13' 48"	E 73 55' 38"
		2.5	0.02	0.05	Pune	Junnar	Junnar	Rajur	Rajur	137	N 19 16' 06"	E 73 48' 13"
		0.7	0.02	0.01	Pune	Junnar	Junnar	Rajur	Rajur	137	N 19 16' 16"	E 73 48' 24"
		0.6	0.02	0.01	Pune	Junnar	Junnar	Rajur	Rajur	137	N 19 16' 43"	E 73 47' 53"
		0.25	0.02	0.01	Pune	Junnar	Junnar	Rajur	Rajur	137	N 19 16' 12"	E 73 48' 32"
		0.3	0.02	0.01	Pune	Junnar	Junnar	Rajur	Rajur	138	N 19 16' 33"	E 73 46' 57"
		0.2	0.02	0.00	Pune	Junnar	Junnar	Rajur	Rajur	138	N 19 15' 39"	E 73 46' 44"
		0.3	0.02	0.01	Pune	Junnar	Junnar	Rajur	Rajur	136	N 19 15' 05"	E 73 48' 47"
		0.3	0.02	0.01	Pune	Junnar	Junnar	Rajur	Rajur	136	N 19 15' 17"	E 73 48' 41
		1.5	0.02	0.03	Pune	Junnar	Junnar	Rajur	Anjanawale	146	N 19 19' 05"	E 73 43' 53"
		1.8	0.02	0.04	Pune	Junnar	Junnar	Rajur	Anjanawale	146	N 19 17' 57"	E 73 41' 11"
		0.3	0.02	0.01	Pune	Junnar	Junnar	Rajur	Anjanawale	144	N 19 17' 43"	E 73 46' 30"
		0.3	0.02	0.01	Pune	Junnar	Junnar	Rajur	Anjanawale	143	N 19 17' 40"	E 73 46' 39"

Works proposed					Location of work						Latlong	
Sr No.	Item of work	Quantity / Area / Unit	Rate	Amount (Rs. in Lakhs	Circle	Division	Range	Round	Beat	Compartment No	Latitude	Longitude
1	2	3	4	5	6	7	8	9	10	11	12	13
	Fire line-Junnar Range (in km.)	0.3	0.02	0.01	Pune	Junnar	Junnar	Rajur	Anjanawale	143	N 19 17' 42"	E 73 46' 05"
		0.20	0.02	0.00	Pune	Junnar	Junnar	Rajur	Nimgiri	143	N 19 16' 54"	E 73 47' 01"
		2.40	0.02	0.05	Pune	Junnar	Junnar	Rajur	Nimgiri	143	N 19 16' 33"	E 73 46' 56"
		0.45	0.02	0.01	Pune	Junnar	Junnar	Rajur	Nimgiri	143	N 19 17' 39"	E 73 46' 45"
		0.58	0.02	0.01	Pune	Junnar	Junnar	Rajur	Nimgiri	142	N 19 15' 47"	E 73 46' 35"
		0.75	0.02	0.02	Pune	Junnar	Junnar	Rajur	Nimgiri	140	N 19 16' 20"	E 73 45' 01"
		2.70	0.02	0.05	Pune	Junnar	Junnar	Botarde	Botarde	106	N- 19 10 45"	E- 73 48 14"
		3.00	0.02	0.06	Pune	Junnar	Junnar	Botarde	Botarde	106	N- 19 10 58"	E- 73 48 01"
		0.76	0.02	0.02	Pune	Junnar	Junnar	Botarde	Botarde	106	N- 19 11 27"	E- 73 47 18"
		0.45	0.02	0.01	Pune	Junnar	Junnar	Botarde	Botarde	106	N- 19 11 15"	E- 73 46 48"
		0.50	0.02	0.01	Pune	Junnar	Junnar	Botarde	Botarde	106	N- 19 11 15"	E- 73 46 48"
		0.68	0.02	0.01	Pune	Junnar	Junnar	Botarde	Botarde	107	N- 19 11 35"	E- 73 46 05"
		1.18	0.02	0.02	Pune	Junnar	Junnar	Botarde	Botarde	107	N- 19 11 53"	E- 73 45 49"
		1.18	0.02	0.02	Pune	Junnar	Junnar	Botarde	Botarde	108	N- 19 11 57"	E- 73 45 18"
		3.15	0.02	0.06	Pune	Junnar	Junnar	Botarde	Botarde	109	N- 19 11 15"	E- 73 46 48"
		5.28	0.02	0.11	Pune	Junnar	Junnar	Botarde	Botarde	109	N- 19 11 16"	E- 73 44 36"
		1.69	0.02	0.03	Pune	Junnar	Junnar	Botarde	Botarde	109	N- 19 11 10"	E- 73 44 20"
		1.43	0.02	0.03	Pune	Junnar	Junnar	Botarde	Ingloon	80	N- 19 12 51"	E- 73 38 11"
		3.10	0.02	0.06	Pune	Junnar	Junnar	Botarde	Tambe	103	N- 19 10 50"	E- 73 46 16"
		1.66	0.02	0.03	Pune	Junnar	Junnar	Botarde	Tambe	99	N- 19 09 14"	E- 73 49 12"
		3.24	0.02	0.06	Pune	Junnar	Junnar	Botarde	Tambe	99	N- 19 08 58"	E- 73 48 21"
		6.00	0.02	0.12	Pune	Junnar	Junnar	Botarde	Tambe	100	N- 19 07 30"	E 73 50 29"
		3.60	0.02	0.07	Pune	Junnar	Junnar	Botarde	Tambe	102	N 19 20' 10"	E 73 55' 06"
		0.30	0.02	0.01	Pune	Junnar	Junnar	Botarde	Tambe	101	N 19 15' 33"	E 73 80' 82"
		1.80	0.02	0.04	Pune	Junnar	Junnar	Botarde	Ingloon	113	N 19 13' 29"	E 73 38' 52"
		0.60	0.02	0.01	Pune	Junnar	Junnar	Botarde	Ingloon	115	N 19 13' 34"	E 73 40' 14"
		1.50	0.02	0.03	Pune	Junnar	Junnar	Botarde	Ingloon	115	N 19 13' 49"	E 73 41' 31"
		1.20	0.02	0.02	Pune	Junnar	Junnar	Botarde	Ingloon	115	N 19 13' 42"	E 73 38' 58"

Works proposed					Location of work						Latlong	
Sr No.	Item of work	Quantity / Area / Unit	Rate	Amount (Rs. in Lakhs	Circle	Division	Range	Round	Beat	Compartment No	Latitude	Longitude
1	2	3	4	5	6	7	8	9	10	11	12	13
	Fire line-Junnar Range (in km.)	2.64	0.02	0.05	Pune	Junnar	Junnar	Aptale	Aptale		N 19 11' 54"	E 73 50' 20"
		2.34	0.02	0.05	Pune	Junnar	Junnar	Aptale	Aptale		N 19 12' 49"	E 73 49' 20"
		2.06	0.02	0.04	Pune	Junnar	Junnar	Aptale	Aptale		N 19 12' 49"	E 73 49' 20"
		3.47	0.02	0.07	Pune	Junnar	Junnar	Aptale	Aptale		N 19 12' 50"	E 73 46' 50"
		1.92	0.02	0.04	Pune	Junnar	Junnar	Aptale	Aptale		N 19 13' 12"	E 73 44' 16"
		1.68	0.02	0.03	Pune	Junnar	Junnar	Aptale	Ghatghar		N 19 17' 52"	E 73 41' 05"
		2.81	0.02	0.06	Pune	Junnar	Junnar	Aptale	Tejur		N 19 13' 38"	E 73 48' 21"
		1.71	0.02	0.03	Pune	Junnar	Junnar	Aptale	Tejur		N 19 13' 10"	E 73 46' 35"
		2.11	0.02	0.04	Pune	Junnar	Junnar	Aptale	Tejur		N 19 13' 09"	E 73 45' 39"
		3.52	0.02	0.07	Pune	Junnar	Junnar	Aptale	Tejur		N 19 13' 26"	E 73 44' 46"
		3.79	0.02	0.08	Pune	Junnar	Junnar	Aptale	Tejur		N 19 14' 22"	E 73 44' 50"
		3.25	0.02	0.07	Pune	Junnar	Junnar	Aptale	Tejur		N 19 14' 29"	E 73 44' 53"
	Fire line- Khed Range	240	0.02	4.80	Pune	Junnar	Khed	All	All		N19.020714	E 73.578390
		646.03		**12.92**								
	Fire Line For Bhor Range	200	0.045 per Km	9.00	Pune	Bhor	Bhor	Bhor	Bhor		N 180948	E 735134
	Fire Line Nasrapur Range	60	0.045 per Km	2.70	Pune	Bhor	Nasrapur	Nasrapur	Nasrapur		N 181540	E 735305
	Fire Line Saswad Range	200	0.045 per Km	9.00	Pune	Bhor	saswad	saswad	saswad		N 182133	E 740105
	Fire Line Velhe Range	200	0.045 per Km	9.00	Pune	Bhor	Velhe	Velhe	Velhe		N 183018	E736445
		660.00		**29.70**								
	Fire Line	70.00	0.0044	0.31	Pune	Solapur	Solapur	Solapur	G.Kanbas	344 pt.	N-17.74'81.44"	E-76. 05'63.85"
	Fire Line	25.07	0.0044	0.11	Pune	Solapur	Barshi	Vairag	Pangaon	256	18°10'45.82"N	75°42'35.49"E
	Fire Line	10.00	0.0044	0.04	Pune	Solapur	Barshi	Pangri	Dhamangaon	257	18°14'8.60"N	75°36'22.91"E
	Fire Line	22.30	0.0044	0.10	Pune	Solapur	Barshi	Pangri	Dhamangaon	258	18°10'56.48"N	75°38'3.54"E
	Fire Line	14.60	0.0044	0.06	Pune	Solapur	Barshi	Vairag	Pangaon	259	18°10'32.20"N	75°41'58.44"E
	Fire Line	39.79	0.0044	0.18	Pune	Solapur	Barshi	Vairag	Chincholi	309	18°14'32.90"N	75°55'35.00"E
	Fire Line	25.00	0.0044	0.11	Pune	Solapur	Barshi	Vairag	Chincholi	310	18°11'30.50"N	75°52'59.04"E
	Fire Line	18.01	0.0044	0.08	Pune	Solapur	Barshi	Vairag	Vairag	311B	N 18 11 15	E 75 53 03
	Fire Line	11.00	0.0044	0.05	Pune	Solapur	Pandhrpur	Pandhrpur	Karkamb	85	N 17.701593	E 75.210505

Works proposed					Location of work						Latlong	
Sr No.	Item of work	Quantity / Area / Unit	Rate	Amount (Rs. in Lakhs	Circle	Division	Range	Round	Beat	Compartment No	Latitude	Longitude
1	2	3	4	5	6	7	8	9	10	11	12	13
	Fire Line	39.65	0.0044	0.17	Pune	Solapur	Pandhrpur	Pandhrpur	Karkamb	87	N 17.619544	E 75.14188
	Fire Line	11.81	0.0044	0.05	Pune	Solapur	Pandhrpur	Manglwdha	Huljanti	122	N 17.26467	E 75.23112
	Fire Line	15.58	0.0044	0.07	Pune	Solapur	Pandhrpur	Manglwdha	Huljanti	123	N 17.30608	E 75.26187
	Fire Line	5.79	0.0044	0.03	Pune	Solapur	Pandhrpur	Manglwdha	Huljanti	124	N 17.58536	E 74.985186
	Fire Line	40.00	0.0044	0.18	Pune	Solapur	Sangola	Sangola	Katfal	91	N 17.31934	E 75.011149
	Fire Line	50.00	0.0044	0.22	Pune	Solapur	Sangola	Sangola	Achkdani	109	N 17.31387	E 75.02073
	Fire Line	50.00	0.0044	0.22	Pune	Solapur	Sangola	Sangola	Achkdani	107	N 17.13241	E 74.54092
	Fire Line	60.00	0.0044	0.26	Pune	Solapur	Sangola	Kola	Kola	159	N 17.14577	E 75.04494
	Fire Line	40.00	0.0044	0.18	Pune	Solapur	Sangola	Junoni	H.M.wadi	163	N 17.20301	E 75.08528
	Fire Line	44.20	0.0044	0.19	Pune	Solapur	Sangola	Junoni	H.M.wadi	170	N 17.09263	E 75.17271
	Fire Line	2.35	0.0044	0.01	Pune	Solapur	Sangola	Junoni	H.M.wadi	174	N 17.14101	E 75.17521
	Fire Line	16.48	0.0044	0.07	Pune	Solapur	Sangola	Junoni	H.M.wadi	175	N 17.15104	E 75.04161
	Fire Line	47.43	0.0044	0.21	Pune	Solapur	Malshiras	Natepute	Phondshiras	37	N17.9598'89"	E 74.7856'69"
	Fire Line	13.14	0.0044	0.06	Pune	Solapur	Malshiras	Piliv	Piliv	38	N17.64'509"	E 75.00'1762"
	Fire Line	10.46	0.0044	0.05	Pune	Solapur	Malshiras	Natepute	Phondshiras	39	N17.58'345"	E 74.48'616"
	Fire Line	50.00	0.0044	0.22	Pune	Solapur	Malshiras	Natepute	Phadtare	45	N17.5006'8"	E 74.41'278"
	Fire Line	55.00	0.0044	0.24	Pune	Solapur	Malshiras	Malshiras	Jalabhvi	47	N17.78'346"	E 74.76'9287"
	Fire Line	63.26	0.0044	0.28	Pune	Solapur	Malshiras	Malshiras	Islampur	51	N17.77'1628"	E 74.88'0948"
	Fire Line	43.00	0.0044	0.19	Pune	Solapur	Malshiras	Malshiras	Jalabhvi	48	N17.74'5044"	E 74.83'3026"
	Fire Line	38.30	0.0044	0.17	Pune	Solapur	Malshiras	Piliv	Maloli	99	N17.71'2752"	E 75.01'6248"
	Fire Line	50.00	0.0044	0.22	Pune	Solapur	Malshiras	Piliv	Piliv	97	N17.66'6331"	E 74.91'4483"
	Fire Line	59.83	0.0044	0.26	Pune	Solapur	Pandhrpur	Pandhrpur	Karkamb	59	17.823832	75.36129
		1042.05		**4.59**								
	Total Fire Line	**2560.88**		**64.27**								

Works proposed					Location of work						Latlong	
Sr No.	Item of work	Quantity / Area / Unit	Rate	Amount (Rs. in Lakhs	Circle	Division	Range	Round	Beat	Compartment No	Latitude	Longitude
1	2	3	4	5	6	7	8	9	10	11	12	13
iii	**Fire Watcher**											
	Fire Watcher in Shirota Range	10	0.68	6.80	Pune	Pune	Shirota	Vahangaon	Pimpari	69	N 18 967725	E 73 52646
	Fire Watcher in Shirota Range	10	0.68	6.80	Pune	Pune	Shirota	Vahangaon	Khandi	59	N 18 955233	E 73 493962
	Fire Watcher in Shirota Range	10	0.68	6.80	Pune	Pune	Shirota	Vahangaon	Kalhat	13,14,23,24,26	N 18 82484	E 73 5941
	Fire Watcher in Shirota Range	10	0.68	6.80	Pune	Pune	Shirota	Vahangaon	Vahangaon	27,28,29,30	N 18 9025	E 73 56769
	Fire Watcher in Shirota Range	10	0.68	6.80	Pune	Pune	Shirota	Vahangaon	Kunewadi	8,9,10 pt	N 18 5540	E 73 3237
	Fire Watcher in Shirota Range	10	0.68	6.80	Pune	Pune	Shirota	Vahangaon	Kiwale	11, 12 pt	N 18 5406	E 73 3434
	Fire Watcher in Shirota Range	10	0.68	6.80	Pune	Pune	Shirota	Uksan	Aundhr Khr.	34/50 pt	N 18 4829	E 73 2643
	Fire Watcher in Shirota Range	10	0.68	6.80	Pune	Pune	Shirota	Uksan	Somwadi	47 pt	N 18 50996	E 73 28125
		80.00		**54.40**								
	Fire watchers (for 4 months) for each fire wacher daily wage rate @430. (430 X 26 = 11180 for each month)	2	0.45	0.89	Pune	Junnar	Chakan	Amboli	Amboli	321	N 18 55 32	E 73 33 00
		2	0.45	0.89	Pune	Junnar	Chakan	Amboli	Torne Khurd	322	N 18 55 54	E 73 35 03
		2	0.45	0.89	Pune	Junnar	Chakan	parsul	Kharpud	326	N 18 00 39	E 73 33 49
		2	0.45	0.89	Pune	Junnar	Chakan	Parsul	Kude	328	N 18 57 21	E 73 39 33
		2	0.45	0.89	Pune	Junnar	Chakan	Parsul	Parsul	329	N 18 59 03	E 73 36 37
		2	0.45	0.89	Pune	Junnar	Chakan	Chakan	Wahagaon	343	N 18 51 01	E 73 39 24
		4	0.45	1.79	Pune	Junnar	Chakan	Chakan	Ambethan	350	N 18 50 10	E 73 41 04
		4	0.45	1.79	Pune	Junnar	Chakan	Chakan	Chakan	355	N 18 43 17	E 73 52 27
		2	0.45	0.89	Pune	Junnar	Chakan	Chakan	Bhose	357	N 18 43 01	E 73 54 28
		4	0.45	1.79	Pune	Junnar	Chakan	Alandi	Charholi khurd	362	N 18 41 43	E 73 52 27
		2	0.45	0.89	Pune	Junnar	Chakan	Alandi	Wadgaon	364	N 18 41 17	E 73 57 13
		2	0.45	0.89	Pune	Junnar	Chakan	Alandi	Koyali	368	N 18 45 52	E 74 00 35
	Fire watchers - Per Beat 2 No each	2	0.45	0.90	Pune	Junnar	Ghodegaon	Ghodegaon	Ghodegaon	205	N 19.024120	E 73.836526
		2	0.45	0.90	Pune	Junnar	Ghodegaon	Ghodegaon	Ghodegaon	204	N 19.028702	E 73.785005
		2	0.45	0.90	Pune	Junnar	Ghodegaon	Ghodegaon	Girawali	199	N 19.066751	E 73.850063
		2	0.45	0.90	Pune	Junnar	Ghodegaon	Shinoli	pokhari	184	N 19.084608	E 73.727971
		2	0.45	0.90	Pune	Junnar	Ghodegaon	Shinoli	Dimbhe kh	187	N 19.068765	E 73.735502
	Fire watchers - Per Beat 2 No each	28	0.45	12.6	Pune	Junnar	Khed	All Round	All Round	All		
	Fire watchers - Otur Range- Per Beat 2 No each	34	0.45	15.30	Pune	Junnar	Otur	All Round	All Beats	All		
		102.00		**45.82**								
	Total Fire Watcher	**182.00**		**100.22**								
	Total (f)	**2742.88**		**164.48**								

Works proposed					Location of work						Latlong	
Sr No.	Item of work	Quantity / Area / Unit	Rate	Amount (Rs. in Lakhs	Circle	Division	Range	Round	Beat	Compartment No	Latitude	Longitude
1	2	3	4	5	6	7	8	9	10	11	12	13
5 (2) (g)	soil and moisture conservation works in the forest;											
6	Gabiyan Banth	5	0.50	2.50	Pune	pune	Shirota	Vahangaon	Pimpri	69	No- 18967725	E - 7352646
	Gabiyan Banth	5	0.50	2.50	Pune	pune	Shirota	Vahangaon	Khandi	77	No- 188860931	E 7344466894
	Gabiyan Banth	2	0.50	1.00	Pune	pune	Shirota	Vahangaon	Kiwale	11PT	No- 183559	E - 733422
	Gabiyan Banth	2	0.50	1.00	Pune	pune	Shirota	Vahangaon	Kiwale	11PT	No- 185401	E - 733423
	Gabiyan Banth	2	0.50	1.00	Pune	pune	Shirota	Vahangaon	Kiwale	11PT	No- 185401	E - 733423
	Gabiyan Banth	2	0.50	1.00	Pune	pune	Shirota	Vahangaon	Kiwale	11PT	No- 185402	E - 733424
	Gabiyan Banth	2	0.50	1.00	Pune	pune	Shirota	Vahangaon	Kiwale	11PT	No- 185400	E - 73342
	Construction of Gabian	5.00	0.50	2.50	Pune	Pune	Bhamburda	P.Parvti	Kothrud	96,97	N 18 52.75	E-73 .82.20
	Construction of Gabian	5.00	0.50	2.50	Pune	Pune	Bhamburda	P.Parvti	Kothrud	81	N 18 52.90	
	Construction of Gabian	5.00	0.50	2.50	Pune	Pune	Bhamburda	P.Parvti	Kothrud	94	N 18 52.91	E-73.82.29
	Construction of Gabian	5.00	0.50	2.50	Pune	Pune	Bhamburda	Khanapur	Khanapur	259,260,261, 262, 263	18.38.00718	73.72.4566
	Construction of Gabian	5.00	0.50	2.50	Pune	Pune	Bhamburda	P.Parvti	Kothrud	102	18.38.00719	73.72.4567
	Construction of Gabian	5.00	0.50	2.50	Pune	Pune	Bhamburda	P.Parvti	Kothrud	120	18.38.00720	73.72.4568
		50.00		**25.00**								
	Gabian Bandara	5	0.50	2.50	Pune	Junnar	Chakan	Amboli	Amboli	329	N 18 58 41.9	E 73 32 18.7
	Gabian Bandara	5	0.50	2.50	Pune	Junnar	Chakan	Parsul	Parsul	326	N 18 00 39	E 73 33 49
	Gabian Bandara	5	0.50	2.50	Pune	Junnar	Chakan	Amboli	Torne Khurd	322	N 18 55 54	E 73 35 03
	Gabian Bandara	5	0.50	2.50	Pune	Junnar	Chakan	Chakan	Amboli	319	N 18 55 32	E 73 33 00
	Gabian Bandara	5	0.50	2.50	Pune	Junnar	Chakan	Chakan	Wahagaon	343	N 18 51 01	E 73 39 24
	Gabian Bandara	5	0.50	2.50	Pune	Junnar	Chakan	Chakan	Wahagaon	346	N 18 48 58	E 73 42 59
	Gabian Bandara	5	0.50	2.50	Pune	Junnar	Chakan	Chakan	Chakan	355	N 18 43 17	E 73 52 27
	Gabian Bandara	5	0.50	2.50	Pune	Junnar	Chakan	Chakan	Bhose	359	N 18 43 30	E 73 57 10
	Gabian Bandara	5	0.50	2.50	Pune	Junnar	Chakan	Chakan	Koyali	368	N 18 41 38.3	E 73 57 26.8
	Gabian Bandara	5	0.50	2.50	Pune	Junnar	Chakan	Chakan	Wadgaon Ghenand	364	N 18 41 17	E 73 57 13
		50		**25.00**								

Works proposed					Location of work						Latlong	
Sr No.	Item of work	Quantity / Area / Unit	Rate	Amount (Rs. in Lakhs	Circle	Division	Range	Round	Beat	Compartment No	Latitude	Longitude
1	2	3	4	5	6	7	8	9	10	11	12	13
	Gabyen	5	0.50	2.50	Pune	Bhor	Bhor	Velvand	Pangari	427pt	N18175978	E738965
	Gaybiyan Structure	4	0.50	2.00	Pune	Bhor	Nasarapur	Kikvi	Kikvi	503	18.228345	73.972033
	Gaybiyan Structure	4	0.50	2.00	Pune	Bhor	Nasarapur	Nasarapur	Nasarapur	350	18.211225	73.86867
	Gaybiyan Structure	4	0.50	2.00	Pune	Bhor	Nasarapur	Nasarapur	Varve ku	343	18.309216	73.887837
	Gaybiyan Structure	3	0.50	1.50	Pune	Bhor	Velhe	Velhe	Velhe	409	N 18 25 30	E 73 63 00
	Gaybiyan Structure	11	0.50	5.50	Pune	Bhor	Velhe	Ambawane	Mangaon	378	N 18 19 21	E 73 34 40
	Gaybiyan Structure	11	0.50	5.50	Pune	Bhor	Velhe	Kelad	Gunjawane	415	N 18 14 62	E 73 42 73
	Gaybiyan Structure	4	0.50	2.00	Pune	Bhor	Saswad	Saswad	NarayanpurS	335	18.287223	74.964694
	Gaybiyan Structure	4	0.50	2.00	Pune	Bhor	Saswad	Jejuri	Walha	517	N 181334	E 741119
		50		**25.00**								
	Total Gaybiyan Structure	**150.00**		**75.00**								
4	Cement Bandh	2	15.00	30.00	Pune	pune	Shirota	Vahangaon	Kunhevadi	8,PT	No- 185541	E - 733234
	Cement Bandh	1	15.00	15.00	Pune	pune	Shirota	Vahangaon	Pimpri	68	No- 185619	E - 733205
	Cement Bandh	1	15.00	15.00	Pune	pune	Shirota	Vahangaon	Pimpri	68	No- 185600	E - 733159
	Cement Bandh	1	15.00	15.00	Pune	pune	Shirota	Vahangaon	Khandi, Sawala	14	No- 189600793	E - 734829426
	Cement Bandh	1	15.00	15.00	Pune	pune	Shirota	Vahangaon	Kiwale	11PT	No- 185401	E - 733424
		6		**90.00**								
	Cement Bandhara	2	15.00	30.00	Pune	Junnar	Khed	khed	chas	277	N18.901818	E73.803469
	Total Cement Bandh	**8**		**120.00**								
2	Check Dam	2	0.45	0.90	Pune	Pune	Pune	Lonikalbhor	Lonikalbhor	292 Pt	N 18 27 27	E 74 10 51.
	Chek Dam	2	0.45	0.90	Pune	Pune	Puad	Ghotawade	Ghotawade	164	18 35 21	73 39 32 68
	Checkdam	2	0.45	0.90	Pune	Pune	Vadgaon	Lonavala	Atwan	70	N18 42'26"	E73 24'59"
	check dam	2	0.45	0.90	Pune	Pune	Pune	Loni kalbhor	Wadaki	289	N 18.25.18	E 73.59.16
	check dam	2	0.45	0.90	Pune	Pune	Bhamburda	Khanapur	khanapur	249	N 18 36 70	E 73 73 06
		10.00		**4.50**								
	Checkdam	2	0.45	0.90	Pune	Junnar	Manchar	Manchar	Chinchodi	175	N-19.03'8169	E-73.86'8443
	Chekdam	2	0.45	0.90	Pune	Junnar	Ghodegaon	Ghodegaon, Kanse	Fulawade, Gangapur kh., Amondi, Kolwadi/ kotamdar, Giravali	191, 195, 198 , 204, 199	N19.0820	E73.46.42,

Works proposed					Location of work						Latlong	
Sr No.	Item of work	Quantity / Area / Unit	Rate	Amount (Rs. in Lakhs	Circle	Division	Range	Round	Beat	Compartment No	Latitude	Longitude
1	2	3	4	5	6	7	8	9	10	11	12	13
	Chekdam	2	0.45	0.90	Pune	Junnar	shirur	Shikrapur, Piparkhed	Alegaon Paga, Kwathe	306, 290	N- 183847	E-741819
	Chekdam-	2	0.45	0.90	Pune	Junnar	Junnar	Aptale	Aptale	123	N 19 13' 45"	E 73 43' 54"
	Chekdam	2	0.45	0.90	Pune	Junnar	Khed	khed	Gulani	262 ,267	N18.90165	E73.995336
		10.00		**4.50**								
	Checkdam	2	0.45	0.90	Pune	Solapur	Barshi	Vairag	Chincholi	261	18°16'35.72"N	75°55'36.65"E
	Checkdam	2	0.45	0.90	Pune	Solapur	Mohol	Mohol	Kamti	77	N17.723752	E75.655053
	Checkdam	2	0.45	0.90	Pune	Solapur	Barshi	Vairag	Pangaon	153	18° 7'11.85"N	75°40'49.92"E
	Checkdam	2	0.45	0.90	Pune	Solapur	Sangola	Kola	Kola	244	17.248584	74.937616
	Checkdam	2	0.45	0.90	Pune	Solapur	Malshiras	Natepute	Phadtri	45	N17.77'5797"	E 74.77'6325"
		10.00		**4.50**								
	Check Dam	3	0.45	1.35	Pune	Bhor	Bhor	Velvand	Chandavane	488 pt	N181130	E734007
	Check Dam	4	0.45	1.80	Pune	Bhor	Bhor	Velvand	Pangari	427pt	N18175978	E738965
	Check Dam	3.00	0.45	1.35	Pune	Bhor	Bhor	Bhor	Apati	453 pt	N 180817	E 735343
		10.00		**4.50**								
	Check Dam	2	0.45	0.90	Pune	Bhor	Nasarapur	Kikvi	Kikvi	502	18.22794	73.971097
	Check Dam	3	0.45	1.35	Pune	Bhor	Bhor	Bhor	Bholawade	431 pt	N 181046	E734830
	Check Dam	3	0.45	1.35	Pune	Bhor	Velhe	Velhe	Dhanep	373	N 18 18 32	E 73 31 45
	Check Dam	2	0.45	0.90	Pune	Bhor	Saswad	Jejuri	Jejuri	330	18220033	74148495
		10.00		**4.50**								
	Total Check Dam	**40.00**		**18.00**								
5	Vantale	1	3.00	3.00	Pune	pune	Shirota	Vahangaon	Pimpri	68	No- 18946349	E - 73524391
	Vantale	1	3.00	3.00	Pune	pune	Shirota	Vahangaon	Khandi	77	No- 188819314	E - 734512495
	Vantale	1	3.00	3.00	Pune	pune	Shirota	Vahangaon	Kalhat	13,14,23,24,26 PT	No- 1881365	E - 736078
	Vantale	1	3.00	3.00	Pune	pune	Shirota	Vahangaon	Kunhevadi	8 PT	No- 185540	E - 733237
	Vantale	1	3.00	3.00	Pune	pune	Shirota	Vahangaon	Kiwale	11PT	No- 185355	E - 733438
	Vantale	1	3.00	3.00	Pune	pune	Shirota	Uksan	Uksan	32/31 Pt	No- 18830902	E - 73510962
	Vantale	1	3.00	3.00	Pune	pune	Shirota	Uksan	Somavadi	47 Pt	No- 1850996	E - 7328125

Works proposed					Location of work						Latlong	
Sr No.	Item of work	Quantity / Area / Unit	Rate	Amount (Rs. in Lakhs	Circle	Division	Range	Round	Beat	Compartment No	Latitude	Longitude
1	2	3	4	5	6	7	8	9	10	11	12	13
	Vantale at Patas 1	1	3.00	3.00	Pune	Pune	Daund	Varvand	Patas	**112**	N-18411984	E-74487555
	Vantale	1	3.00	3.00	Pune	pune	Shirota	Uksan	Aundhe Kh.	34 Pt	No- 185233	E - 732835
	Vantale at Khor 21	1	3.00	3.00	Pune	Pune	Daund	Yavat	Yavat	468	N-18398981	E-74337638
	Vantalav in shirsuphal	1	3.00	3.00	Pune	Pune	Baramati	Baramati	Shirsuphal	**301**	N 18 32 41	E 74 55 80
	Vantalav in sawal	1	3.00	3.00	Pune	Pune	Baramati	Baramati	parwadi	286	N 18 18 60	E 74 63 42
	Vantalav in undawadi K.P	1	3.00	3.00	Pune	Pune	Baramati	Baramati	Baramati	172	N 18 26 58	E 74 57 21
	Vantalav in Vadhane	1	3.00	3.00	Pune	Pune	Baramati	Morgoan	Morgoan	166	N 18 36 01	E 74 30 15
	Vantalav in Jaradwadi	1	3.00	3.00	Pune	Pune	Baramati	Baramati	Baramati	54	N 18 26 58	E 74 54 90
	Vantale	1	3.00	3.00	Pune	Pune	Indapur	Indapur	Kati	Nirnimgaon - 110	N 17.56.13	E 74.56.40
	Vantale	1	3.00	3.00	Pune	Pune	Indapur	Indapur	Bijwadi	Podkulwadi - 102	N 18.0712	E 74.56.20
	Vantale	1	3.00	3.00	Pune	Pune	Indapur	Junction	Kalas	Lasurne - 727	N 18.7.0	E 74.45.47
	Vantale	1	3.00	3.00	Pune	Pune	Indapur	Junction	Kauthali	434	N 18.13.9766	E 74.89.4895
	Vantale	1	3.00	3.00	Pune	Pune	Indapur	Bhigwan	Bhigwan	Bhigwan - 197	N 18.19.13	E 74.45.42
		20		**60**								
	Vantale	2	3.00	6.00	Pune	Junnar	Manchar	Dhamani	Lakhangaon	285	N-18.937473	E-74.086437
	Vantale	3	3.00	9.00	Pune	Junnar	Manchar	Dhamani	Lakhangaon	285	N-18.92'5559	E-74.74'0114
	Vantale	1	3.00	3.00	Pune	Junnar	Manchar	Walati	Nirgudsar	282	N-18.95'7203	E-74.04'7526
	Vantale	1	3.00	3.00	Pune	Junnar	Manchar	Walati	Ranjani	111	N-19.04'6897	E-74.00'9574
	Vantale	1	3.00	3.00	Pune	Junnar	Manchar	Walati	Walati	115	N-19.04'9365	E-74.08'3599
	Vantale	1	3.00	3.00	Pune	Junnar	Manchar	Walati	Awasari bk	282	N-18.94'1848	E-74.00'7020
	Vantale	1	3.00	3.00	Pune	Junnar	Manchar	Manchar	Manchar	172	N-18.97401	E73.917924
	Vantale	1	3.00	3.00	Pune	Junnar	shirur	Shirur	Shirur	300	N- 1882327	E-74.32221
	Vantale	1	3.00	3.00	Pune	Junnar	Junnar	Botarde	Botarde	105	N 19 11' 06"	E 73 48' 20"
	Vantale	1	3.00	3.00	Pune	Junnar	Junnar	Botarde	Botarde	105	N 19 11' 11"	E 73 48' 16"
	Vantale	1	3.00	3.00	Pune	Junnar	Junnar	Botarde	Tambe	99	N 19 12' 89"	E 73 82' 88"
	Vantale	1	3.00	3.00	Pune	Junnar	Junnar	Botarde	Tambe	99	N 19 15' 10"	E 73 82' 01"
	Vantale	1	3.00	3.00	Pune	Junnar	Junnar	Botarde	Tambe	100	N 19 15' 09"	E 73 82' 10"

Works proposed					Location of work						Latlong	
Sr No.	Item of work	Quantity / Area / Unit	Rate	Amount (Rs. in Lakhs	Circle	Division	Range	Round	Beat	Compartment No	Latitude	Longitude
1	2	3	4	5	6	7	8	9	10	11	12	13
	Vantale	1	3.00	3.00	Pune	Junnar	Junnar	Botarde	Tambe	100	N 19 12' 84"	E 73 82' 34"
	Vantale	1	3.00	3.00	Pune	Junnar	Junnar	Alame	Alame	78	N 19 15' 18"	E 07 30' 54"
	Vantale	1	3.00	3.00	Pune	Junnar	Khed	khed	chas	277	N18.901818	E73.803469
	Vantale	1	3.00	3.00	Pune	Junnar	Ghodegaon	Ghodegaon,	Kolwadi/ kotamdar	204	N19.022719	E 73.821029
		20		**60**								
	Vantale	1	3.00	3.00	Pune	Bhor	Saswad	Jejuri	Ambale	528	18418356	74418356
	Vantale	1	3.00	3.00	Pune	Bhor	Saswad	Jejuri	Ambale	538	18384336	74100151
		2		**6.00**								
	Total Vantale	**42**		**126.00**								
	DEEP-CCT	30	0.62	18.60	Pune	Pune	Indapur	Indapur	---	---	N 18.19.11	E 74.45.42
	DEEP-CCT	30	0.62	18.60	Pune	Pune	Indapur	Junction	---	---	N 18.9.14	E 74.58.49
	DEEP-CCT	30	0.62	18.60	Pune	Pune	Indapur	Bhigwan	---	---	N 18.19.11	E 74.45.42
	Deep C.C.T. at Kedgaon 20 ha.	20	0.28	5.60	Pune	Pune	Daund	Varvand	Patas	37	N-1846443	E-74373059
	Deep C.C.T. at Varvand 20 ha.	20	0.28	5.60	Pune	Pune	Daund	Varvand	Patas	2104	N-18439455	E-74394063
		130		**67.00**								
	DCCT	1115	0.0027	3.01	Pune	Bhor	Saswad	Jejuri	Jejuri	330	N 18219741	E 74148328
	DCCT	1115	0.0027	3.01	Pune	Bhor	Saswad	Parinche	Mandhar	416	N 181319	E 735937
	DCCT	1115	0.0027	3.01	Pune	Bhor	Saswad	Parinche	Parinche	328	N 181043	E 743530
		3345		**9.03**								
	DEEP-CCT	6.00	0.23	1.38	Pune	Solapur	Mohol	Mohol	Modnimb	182	N18.09421	E75.45867
	DEEP-CCT	4.00	0.23	0.92	Pune	Solapur	Mohol	Mohol	Modnimb	291	N17.92107	E75.34008
	DEEP-CCT	10.00	0.23	2.30	Pune	Solapur	Sangola	Junoni	Gheradi	522	N 17.14394	E 75.14473
	DEEP-CCT	8.00	0.23	1.84	Pune	Solapur	Sangola	Junoni	Gheradi	2,353	N 17.15579	E 75.1657
	DEEP-CCT	14.00	0.23	3.22	Pune	Solapur	Sangola	Junoni	Gheradi	2,002	N 17.17058	E 75.18302
	DEEP-CCT	10.00	0.23	2.30	Pune	Solapur	Sangola	Junoni	H.Mangewadi	172	N 17548645	E 75.024212
	DEEP-CCT	10.00	0.23	2.30	Pune	Solapur	Sangola	Junoni	H.Mangewadi	172	N 17.563651	E 74.98389
		62.00		**14.26**								
	Total CCT	**3537.00**		**90.29**								

Works proposed					Location of work						Latlong	
Sr No.	Item of work	Quantity / Area / Unit	Rate	Amount (Rs. in Lakhs	Circle	Division	Range	Round	Beat	Compartment No	Latitude	Longitude
1	2	3	4	5	6	7	8	9	10	11	12	13
3	Mati Bandhara	7	3.00	21.00	Pune	Pune	Pune	Loni kalbhor	Loni kalbhor	290 & 292	N 18.27.27	E 74.10.51
	Mati Bandhara	2	3.00	6.00	Pune	Pune	Pune	Aalandi Chorachi	Aalandi Chorachi	295	N 18.45.57	E 74.07.16
	Mati Bandhara	2	3.00	6.00	Pune	Pune	Pune	Loni kalbhor	Astapur	301	N 18.33.09	E 74.07.06
	Mati Bandhara	3	3.00	9.00	Pune	Pune	Pune	Khedshivapur	Kheshivapur	275 Pt 272 Pt	N 18.38.74	E 73.81.45
	Mati Nala Bandh at Bhandgaon 2	1	3.00	3.00	Pune	Pune	Daund	Yavat	Yavat	14,61,50,124	N-184265.33	E-74312813
		15		**45.00**								
	Maati Bandh	1	3.00	3.00	Pune	Junnar	Manchar	Kalamb	Nandur	119	N-19.07'3596	E-73.96'1074
	Maati Bandh	1	3.00	3.00	Pune	Junnar	Manchar	Walati	Nirgudsar	282	N-18.95'6044	E-74.04'8065
	Maati Bandh	1	3.00	3.00	Pune	Junnar	Manchar	Walati	Ranjani	111	N-19.04'5987	E-74.00'7207
	Maati Bandh	1	3.00	3.00	Pune	Junnar	Manchar	Walati	Walati	115	N-19.04'9929	E-74.08'7193
	Maati Bandh	1	3.00	3.00	Pune	Junnar	Manchar	Walati	Awasari bk	282	N-18.94'6459	E-74.01'9440
	Maati Bandh	1	3.00	3.00	Pune	Junnar	Manchar	Manchar	Awasari kh	279	N-18.95'4554	E-73.96'2981
	Maati Bandh	3	3.00	9.00	Pune	Junnar	Manchar	Manchar	Manchar	172	N-18.97'7826	E-73.91'0305
	Maati Bandh	1	3.00	3.00	Pune	Junnar	Manchar	Dhamani	Lakhangaon	285	N-18.93'8915	E-74.08'8122
	Maati Bandh	2	3.00	6.00	Pune	Junnar	Manchar	Dhamani	Loni	258	N-18.90'8229	E-74.07'7194
	Earthan bunds Khed Range	2	3.00	6.00	Pune	Junnar	Khed	khed	chas	277	N18.901818	E73.803469
		14		**42.00**								
	Soil Dam	2.00	3.00	6.00	Pune	Bhor	Bhor	Bhor	Nere	437 pt	N 180445	E734943
	Soil Dam	1.00	3.00	3.00	Pune	Bhor	Bhor	Bhor	Bholawade	431 pt	N 181046	E734830
		3.00		**9.00**								
	Maati Bandh	2	3.00	6.00	Pune	Solapur	Solapur	Solapur	Akkalkot		N-17.63'91.61"	E-76.36'13.25"
	Maati Bandh	4	3.00	12.00	Pune	Solapur	Barshi	Vairag	Pangaon		18° 6'59.94"N	75°39'14.76"E
	Maati Bandh	5	3.00	15.00	Pune	Solapur	Sangola	Sangola	katfal		N 17.582777	E 75.007863
	Maati Bandh	4	3.00	12.00	Pune	Solapur	Malshiras	Natepute	Phadtri		N17.4954'7"	E 74.41'251"
		15		**45.00**								
	Total Mati Bandh	**47.00**		**141.00**								
	Total (g)	**3824.00**		**570.29**								

Works proposed					Location of work						Latlong	
Sr No.	Item of work	Quantity / Area / Unit	Rate	Amount (Rs. in Lakhs	Circle	Division	Range	Round	Beat	Compartment No	Latitude	Longitude
1	2	3	4	5	6	7	8	9	10	11	12	13
5 (2) (h)	**Willife Management and Man animal Conflict Operation - Voluntary Relocation of villages form Protected areas inlcuding cost of land and other property of the field owners**											
5(2) (i)	Improvement of wildlife habitat as provided in the approved wildlife management plan of working plan											
i	**Rejuvenation of lakes and Rivers**											
iii	**Creation & maintenance of water sources/ water holes for wildlife**											
1	Artifical Water Holes	1	0.15	0.15	Pune	pune	Shirota	Vahangaon	Kiwale	11,PT	N 185406	E - 733434
	Artifical Water Whole	1	0.15	0.15	Pune	pune	Shirota	Uksan	Uksan	192/196 gat No	N 18832603	E - 73501929
	Artifical Water Whole	1	0.15	0.15	Pune	pune	Shirota	Uksan	Uksan	192/196 gat No	N 18830977	E - 73500583
	Artifical Water Whole	1	0.15	0.15	Pune	pune	Shirota	Uksan	Aundhe Kh.	34 Pt	N 185136	E - 732851
	Artifical Water Holes	4	0.25	1.00	Pune	pune	Shirota	Vahangaon	Vahangaon	27,28,29,30 PT	N 1886189	E - 7352251
	Artifical Water Holes	1	0.15	0.15	Pune	pune	Shirota	Vahangaon	Kunhevadi	8,PT	N 185546	E - 733228
	Artifical Water Holes	1	0.15	0.15	Pune	pune	Shirota	Vahangaon	Kunhevadi	8,PT	N 185415	E - 733422
	Waterhole Ovale	3	0.8	2.4	Pune	Pune	Vadgaon	Vadgaon	Bebad Ohal	233	N183646"	E73 34'25"
	Waterhole Pachane	3	0.8	2.4	Pune	Pune	Vadgaon	Vadgaon	Bebad Ohal	100	N183650"	E73 37'57"
	Waterhole Pusane	4	0.8	3.2	Pune	Pune	Vadgaon	Vadgaon	Bebad Ohal	101	N183648"	E73 37'44"
	Waterhole Gahunje	1	0.8	0.8	Pune	Pune	Vadgaon	Vadgaon	Bebad Ohal	94	N18690438"	E73 704128
	Waterhole Talegaon	1	0.8	0.8	Pune	Pune	Vadgaon	Vadgaon	Bebad Ohal	91,92pt	N184318"	E73 3857"
	Waterhole Parandwadi	1	0.8	0.8	Pune	Pune	Vadgaon	Vadgaon	Bebad Ohal	91,92pt	N184243"	E73 3937"
	Waterhole Talegaon	1	0.8	0.8	Pune	Pune	Vadgaon	Vadgaon	Bebad Ohal	92	N1870702"	E73 68935"
	Waterhole Dhamane	1	0.8	0.8	Pune	Pune	Vadgaon	Vadgaon	Bebad Ohal	95	N184023"	E73 3939"
	Waterhole Dhamane	1	0.8	0.8	Pune	Pune	Vadgaon	Vadgaon	Bebad Ohal	95	N184020"	E73 3945"
	Waterhole Gahunje	1	0.8	0.8	Pune	Pune	Vadgaon	Vadgaon	Bebad Ohal	94	N186831"	E73 71009"
	Waterhole Gahunje	1	0.8	0.8	Pune	Pune	Vadgaon	Vadgaon	Bebad Ohal	94	N1868333"	E73 71012"
	Waterhole Pachane	1	0.8	0.8	Pune	Pune	Vadgaon	Vadgaon	Bebad Ohal	100	N1861656"	E73 63341"
	Waterhole Pusane	1	0.8	0.8	Pune	Pune	Vadgaon	Vadgaon	Bebad Ohal	101	N1861660"	E73 62431"
	Waterhole Pusane	1	0.8	0.8	Pune	Pune	Vadgaon	Vadgaon	Bebad Ohal	101	N1861646"	E73 634"

Works proposed					Location of work						Latlong	
Sr No.	Item of work	Quantity / Area / Unit	Rate	Amount (Rs. in Lakhs	Circle	Division	Range	Round	Beat	Compartment No	Latitude	Longitude
1	2	3	4	5	6	7	8	9	10	11	12	13
	Water Holes	2.00	2.5	5.00	Pune	Pune	Bhamburda	P.Parvti	Kothrud	96,97	N 18.52.83	E- 73,82.23
	Water Holes	2.00	2.5	5.00	Pune	Pune	Bhamburda	P.Parvti	Kothrud	120	N 18.52.84	E- 73,82.24
	Water Holes	2.00	2.5	5.00	Pune	Pune	Bhamburda	P.Parvti	Kothrud	102	N 18.52.85	E- 73,82.25
	Water Holes	2.00	2.5	5.00	Pune	Pune	Bhamburda	P.Parvti	Kothrud	1	N 18.52.86	E- 73,82.26
	Artifical Water Holes	1	0.15	0.15	Pune	pune	Shirota	Vahangaon	Kalhat	13,14, PT	N 1881173	E - 736042970
	Artifical Water Holes	1	0.15	0.15	Pune	pune	Shirota	Vahangaon	Kalhat	13,14, PT	N 1880799	E - 736050782
	Artifical Water Holes	1	0.15	0.15	Pune	pune	Shirota	Vahangaon	Kalhat	13,14, PT	N 1894579	E - 7362363
	Artifical Water Holes	1	0.15	0.15	Pune	pune	Shirota	Vahangaon	Kalhat	13,14, PT	N 1881352	E - 7360634
	Artifical Water Holes	1	0.15	0.15	Pune	pune	Shirota	Vahangaon	Kalhat	13,14, PT	N 1883098	E - 7362437
	Artifical Water Holes	1	0.15	0.15	Pune	pune	Shirota	Vahangaon	Kalhat	13,14, PT	N 1883088	E - 7362450
	Artifical Water Holes	1	0.15	0.15	Pune	pune	Shirota	Vahangaon	Kalhat	13,14, PT	N 1882488	E - 7359428
	Artifical Water Holes	1	0.15	0.15	Pune	pune	Shirota	Vahangaon	Kalhat	13,14, PT	N 1882484	E - 735941
	Artifical Water Holes	1	0.15	0.15	Pune	pune	Shirota	Vahangaon	Kalhat	13,14, PT	N 1883393	E - 736332
	Artifical Water Holes	1	0.15	0.15	Pune	pune	Shirota	Vahangaon	Kalhat	13,14, PT	N 1883393	E - 736332
	Artifical Water Holes	1	0.15	0.15	Pune	pune	Shirota	Vahangaon	Kalhat	13,14, PT	N 1883383	E - 736342
	Water Whole	1	0.15	0.15	Pune	pune	Shirota	Vahangaon	Khandi	150	N 1892911234	E - 734680576
	Water Whole	1	0.15	0.15	Pune	pune	Shirota	Vahangaon	Khandi	150	N 18928267	E - 73468245
	Water Whole	1	0.15	0.15	Pune	pune	Shirota	Vahangaon	Khandi	14	N- 18975280	E - 73485605
	Water Whole	1	0.15	0.15	Pune	pune	Shirota	Vahangaon	Khandi	13	N 189582084	E - 734966294
	Waterhole	3	0.8	2.40	Pune	Pune	Vadgaon	Lonavala	Atwan	75	N18 41'51"	E73 23'17"
	Waterhole	2	0.8	1.60	Pune	Pune	Vadgaon	Lonavala	Kurwande	69	N18 42'48"	E73 23'26"
	Water Whole	1	0.15	0.15	Pune	pune	Shirota	Vahangaon	Pimpri	117	N 18823669	E - 73544137
	Water Whole	1	0.15	0.15	Pune	pune	Shirota	Vahangaon	Pimpri	117	N 18926403	E - 73545026
	Water Whole	1	0.15	0.15	Pune	pune	Shirota	Vahangaon	Pimpri	117	N 18923680	E - 73544150
	Water Whole	1	0.15	0.15	Pune	pune	Shirota	Vahangaon	Pimpri	117	N 18926430	E - 73545035
		63.00		**45.55**								

Works proposed					Location of work						Latlong	
Sr No.	Item of work	Quantity / Area / Unit	Rate	Amount (Rs. in Lakhs	Circle	Division	Range	Round	Beat	Compartment No	Latitude	Longitude
1	2	3	4	5	6	7	8	9	10	11	12	13
	Waterhole	1	1.00	1.00	Pune	Junnar	Manchar	Kalamb	Nandur	119	N-19.07'2694	E-73.967072
	Waterhole	1	1.00	1.00	Pune	Junnar	Manchar	Kalamb	Mahalunge	119	N-19.05'0012	E-73'05'4344
	Waterhole	2	1.00	2.00	Pune	Junnar	Manchar	Manchar	Kurvandi	243	N-18.98'6737	E-73.85'1279
	Waterhole	4	1.00	4.00	Pune	Junnar	Manchar	Manchar	Awasaru kh	278, 279, 280	N-18.948161	E-73.949268
	Waterhole	2	1	2.00	Pune	Junnar	Manchar	Manchar	Manchar	171 ,172	N-18.94'5783	E-73.91'3465
	Waterhole	1	1	1.00	Pune	Junnar	Manchar	Manchar	Chinchodi	175	N-19.02'7803	E-73.87'109
	Waterhole	1	1	1.00	Pune	Junnar	Manchar	Walati	Awasari bk	282	N-18.93'9555	E-73'97'2814
	Waterhole	1	1	1.00	Pune	Junnar	Manchar	Walati	Nirgudsar	283	N-18.94'4945	E-74.02'8258
	Waterhole	1	1	1.00	Pune	Junnar	Manchar	Walati	Walati	116	N-19.04'6279	E-74.02'8258
	Waterhole	3	1	3.00	Pune	Junnar	Manchar	Walati	Ranjani	111	N-19.061697	E-74.09'0665
	Waterhole	5	1	5.00	Pune	Junnar	Manchar	Dhamani	Lakhangaon	285, 287	N-18.86,797	E-74.15'1486
	Waterhole	2 No	1	2.00	Pune	Junnar	Manchar	Dhamani	Loni	293	N-18.89'1874	E-74.05'0291
	Waterhole	3 No	1	3	Pune	Junnar	Manchar	Dhamani	Dhamani	292	N-18.00'1135	E-74.03'6142
	Waterhole	1 No	1	1	Pune	Junnar	Manchar	Dhamani	Loni	293	N-18.88'4323	E-74.08'7427
	Waterholes- Chakan Range, Rs. 100000/- each	1	1.00	1.00	Pune	Junnar	Chakan	Amboli	Amboli	329	N 18 58 41.9	E 73 32 18.7
	Waterholes- Chakan Range, Rs. 100000/- each	1	1.00	1.00	Pune	Junnar	Chakan	Parsul	Parsul	326	N 18 00 39	E 73 33 49
	Waterholes- Chakan Range, Rs. 100000/- each	1	1.00	1.00	Pune	Junnar	Chakan	Amboli	Torne Khurd	322	N 18 55 54	E 73 35 03
	Waterholes- Chakan Range, Rs. 100000/- each	1	1.00	1.00	Pune	Junnar	Chakan	Chakan	Amboli		N 18 55 32	E 73 33 00
	Waterholes- Chakan Range, Rs. 100000/- each	1	1.00	1.00	Pune	Junnar	Chakan	Chakan	Parsul	331	N 18 56 17	E 73 37 16
	Waterholes- Chakan Range, Rs. 100000/- each	1	1.00	1.00	Pune	Junnar	Chakan	Chakan	Parsul	330	N 18 58 00	E 73 57 25
	Waterholes- Chakan Range, Rs. 100000/- each	1	1.00	1.00	Pune	Junnar	Chakan	Chakan	Wahagaon	343	N 18 51 01	E 73 39 24
	Waterholes- Chakan Range, Rs. 100000/- each	1	1.00	1.00	Pune	Junnar	Chakan	Chakan	Wahagaon	346	N 18 48 58	E 73 42 59
	Waterholes- Chakan Range, Rs. 100000/- each	1	1.00	1.00	Pune	Junnar	Chakan	Chakan	Chakan	355	N 18 43 17	E 73 52 27
	Waterholes- Chakan Range, Rs. 100000/- each	1	1.00	1.00	Pune	Junnar	Chakan	Chakan	Bhose	359	N 18 43 30	E 73 57 10
	Waterholes- Chakan Range, Rs. 100000/- each	1	1.00	1.00	Pune	Junnar	Chakan	Chakan	Koyali	368	N 18 41 38.3	E 73 57 26.8
	Waterholes- Chakan Range, Rs. 100000/- each	1	1.00	1.00	Pune	Junnar	Chakan	Chakan	Wadgaon Ghenand	364	N 18 41 17	E 73 57 13
	Waterholes- Chakan Range, Rs. 100000/- each	1	1.00	1.00	Pune	Junnar	Chakan	Chakan	Bhose	357	N 18 43 01	E 73 54 28
	Waterhole- Junnar Range	1	1	1	Pune	Junnar	Junnar	Ngaon	Ozar		N 19 13'34"	E 73 56'31"

Works proposed					Location of work						Latlong	
Sr No.	Item of work	Quantity / Area / Unit	Rate	Amount (Rs. in Lakhs	Circle	Division	Range	Round	Beat	Compartment No	Latitude	Longitude
1	2	3	4	5	6	7	8	9	10	11	12	13
	Waterhole- Junnar Range	1	1	1	Pune	Junnar	Junnar	Ngaon	Ozar		N 19 13'26"	E 73 56'55"
	Waterhole- Junnar Range	1	1	1	Pune	Junnar	Junnar	Ngaon	Ozar		N 19 13'41"	E 73 56'24"
	Waterhole- Junnar Range	1	1	1	Pune	Junnar	Junnar	Ngaon	Sawargaon		N 19 10'77"32	E 73 91'60"24
	Waterhole- Junnar Range	1	1	1	Pune	Junnar	Junnar	Ngaon	Sawargaon		N 19 06'34"43	E 73 52'01"82
	Waterhole- Junnar Range	1	1	1	Pune	Junnar	Junnar	Ngaon	Ngaon		N 19 7'27"	E 73 56'14"
	Waterhole- Junnar Range	1	1	1	Pune	Junnar	Junnar	Ngaon	Ngaon		N 19 05'60'13"	E 74 00'04'27"
	Waterhole- Junnar Range	1	1	1	Pune	Junnar	Junnar	Ngaon	Ngaon		N 19 04'58"	E 73 58'30"
	Waterhole- Junnar Range	1	1	1	Pune	Junnar	Junnar	Ngaon	Ngaon		N 19 06'83'61"	E 73 99'36'85"
	Waterhole- Junnar Range	1	1	1	Pune	Junnar	Junnar	Ngaon	Ngaon	64	.N 19°8'47"	E 73°53'29"
	Waterhole- Junnar Range	1	1	1	Pune	Junnar	Junnar	Ngaon	Sawargaon	65	.N 19°6'33"	E 73°54'51"
	Waterhole- Junnar Range	1	1	1	Pune	Junnar	Junnar	Ngaon	Sawargaon	67	.N 19°6'35"	E 73°52'2"
	Waterhole- Junnar Range	1	1	1	Pune	Junnar	Junnar	Ngaon	Junnar	90	N 19°11'15.1"	E 73°53'17.8"
	Waterhole- Junnar Range	1	1	1	Pune	Junnar	Junnar	Ngaon	Junnar	88	N 19°11'27.3"	E 73°51'28.5
	Waterhole- Junnar Range	1	1	1	Pune	Junnar	Junnar	Aptale	Aptale	129	N 19°12'22"	E 73°49'45"
	Waterhole- Junnar Range	1	1	1	Pune	Junnar	Junnar	Rajur	Anjanavale	146	.N 19°18'16.8"	E 73°41'39.2"
	Waterhole- Junnar Range	2	1	2	Pune	Junnar	Junnar	Botarde	Tambe	99	.N 19°8'51"	E 73°51'26"
	Waterhole- Junnar Range	2	1	2	Pune	Junnar	Junnar	Botarde	Tambe	100	.N 19°8'40"	E 73°50'40"
	Waterhole- Junnar Range	2	1	2	Pune	Junnar	Junnar	Botarde	Botarde	113	.N 19°13'29"	E 73°39'25"
	Waterhole- Junnar Range	1	1	1	Pune	Junnar	Junnar	Alame	Godre	81	.N 19°15'3"	E 73°52'22"
	Waterhole- Junnar Range	1	1	1	Pune	Junnar	Junnar		Alame	25	.N 19°16'21.1"	E 73°54'50.6"
	Waterhole	1	1	1	Pune	Junnar	Ghodegaon	Kanse	Amondi	198	N19.7.38	E73.46.55
	Waterhole	1	1	1	Pune	Junnar	Ghodegaon	Ghodegaon	Ghodegaon	205	N19.00.52	E 73.49.31
	Waterholes	5	0.7	3.5	Pune	Junnar	Khed	All	All	300 ,318 ,268 ,275 271	N18.969826	E73.815522 ,
		66		**70.50**								
	Forest Pond	1	3.00	3.00	Pune	Bhor	Bhor	Velvand	Pangari	427pt	N18175978	E738965
	Forest Pond	1.00	3.00	3.00	Pune	Bhor	Bhor	Bhor	Nere	437 pt	N 180445	E734943
	Forest Pound	1	2.77	2.77	Pune	Bhor	Saswad	Saswad	Devadi	336	N 18.0804	E 74.342444
	Forest Pond	1.00	3.00	3.00	Pune	Bhor	Bhor	Bhor	Bholawade	431 pt	N 181046	E734830
		4.00		**11.77**								

Works proposed					Location of work						Latlong	
Sr No.	Item of work	Quantity / Area / Unit	Rate	Amount (Rs. in Lakhs	Circle	Division	Range	Round	Beat	Compartment No	Latitude	Longitude
1	2	3	4	5	6	7	8	9	10	11	12	13
	Waterholes	2	0.43302	0.87	Pune	Solapur	Sangola	Junoni	Gheradi	249	N 17.16044	E 75.12343
	Waterholes	1	0.43302	0.43	Pune	Solapur	Sangola	Junoni	Gheradi	2,41,261	N 17.16044	E 75.12343
	Waterholes	2	0.43302	0.87	Pune	Solapur	Sangola	Junoni	Gheradi	522	N 17.14394	E 75.14473
	Waterholes	1	0.43302	0.43	Pune	Solapur	Sangola	Junoni	Gheradi	2353	N 17.15579	E 75.1657
	Waterholes	1	0.43302	0.43	Pune	Solapur	Sangola	Junoni	Gheradi	1123	N 17.15391	E 75.10315
	Waterholes	1	0.43302	0.43	Pune	Solapur	Sangola	Junoni	Gheradi	203/11	N 17.263209	E 75.306974
	Waterholes	1	0.43302	0.43	Pune	Solapur	Sangola	Junoni	H.Mangewadi	172	N 17.25252	E 75.095637
	Waterholes	3	0.43302	1.30	Pune	Solapur	Sangola	Junoni	H.Mangewadi	162pt	N 17.12333	E 75.59585
	Waterholes	1	0.43302	0.43	Pune	Solapur	Sangola	Sangola	Sangola	404	N 17.3234	E 75.83663
	Waterholes	1	0.43302	0.43	Pune	Solapur	Sangola	Sangola	Sangola	560	N 17.575831	E 75.186658
	Waterholes	1	0.43302	0.43	Pune	Solapur	Sangola	Sangola	Sangola	71	N 17.568718	E 75.189168
	Waterholes	1	0.43302	0.43	Pune	Solapur	Sangola	Sangola	Sangola	106pt	N 17.263	E 75.312
	Waterholes	1	0.43302	0.43	Pune	Solapur	Sangola	Sangola	Sangola	111pt	N 17.572174	E 75.154439
	Waterholes	1	0.43302	0.43	Pune	Solapur	Sangola	Sangola	katfal	91	N 17.572962	E 75.0299
	Waterholes	1	0.43302	0.43	Pune	Solapur	Sangola	Sangola	katfal	91	N 17.58536	E 74.9851586
	Waterholes	1	0.43302	0.43	Pune	Solapur	Sangola	Sangola	katfal	91	N 17.550077	E 75.022594
	Waterholes	1	0.43302	0.43	Pune	Solapur	Sangola	Sangola	katfal	91	N 17.561932	E 74.975351
	Waterholes	1	0.43302	0.43	Pune	Solapur	Sangola	Sangola	Achakdani	107pt	N 17.29465	E 75.313
	Waterholes	2	0.43302	0.87	Pune	Solapur	Sangola	Sangola	Mahud	90pt	N 17.37248	E 75.4279
	Waterholes	1	0.43302	0.43	Pune	Solapur	Sangola	Kola	Kola	160A	N 17.13176	E 74.56502
	Waterholes	1	0.43302	0.43	Pune	Solapur	Sangola	Kola	Kola	160A	N 17.12223	E 74.56298
	Waterholes	1	0.43302	0.43	Pune	Solapur	Sangola	Kola	Kola	160A	N 17.14238	E 74.54339
	Waterholes	1	0.43302	0.43	Pune	Solapur	Sangola	Kola	Kola	159	N 17.11525	E 74.52336
	Waterholes	1	0.43302	0.43	Pune	Solapur	Sangola	Kola	Kola	159	N 17.10409	E 74.53273
	Waterholes	1	0.43302	0.43	Pune	Solapur	Sangola	Kola	Kola	158pt	N 17.10365	E 74.55152
	Waterholes	2	0.43302	0.87	Pune	Solapur	Sangola	Kola	Kola	158	N 17.11061	E 74.55196
	Waterholes	1	0.43302	0.43	Pune	Solapur	Barshi	Pangri	Pangri	21	18°18'14.56"N	75°53'41.49"E
	Waterholes	1	0.43302	0.43	Pune	Solapur	Barshi	Pangri	Pangri	25	18°18'55.88"N	75°54'40.72"E

Works proposed					Location of work						Latlong	
Sr No.	Item of work	Quantity / Area / Unit	Rate	Amount (Rs. in Lakhs	Circle	Division	Range	Round	Beat	Compartment No	Latitude	Longitude
1	2	3	4	5	6	7	8	9	10	11	12	13
	Waterholes	2	0.43302	0.87	Pune	Solapur	Barshi	Pangri	Pangri	98	18°20'55.24"N	75°53'23.58"E
	Waterholes	1	0.43302	0.43	Pune	Solapur	Barshi	Pangri	Pangri	212	18°21'42.48"N	75°50'32.87"E
	Waterholes	1	0.43302	0.43	Pune	Solapur	Barshi	Pangri	Pangri	172	18°16'4.48"N	75°48'45.70"E
	Waterholes	1	0.43302	0.43	Pune	Solapur	Barshi	Pangri	Dhamngaon	29	18°23'44.07"N	75°46'41.03"E
	Waterholes	1	0.43302	0.43	Pune	Solapur	Barshi	Pangri	Dhamngaon	225	18°23'57.27"N	75°46'30.96"E
	Waterholes	1	0.43302	0.43	Pune	Solapur	Barshi	Pangri	Dhamngaon	10	18°10'59.20"N	75°32'59.79"E
	Waterholes	1	0.43302	0.43	Pune	Solapur	Barshi	Pangri	Dhamngaon	44	18°22'34.52"N	75°49'10.11"E
	Waterholes	2	0.43302	0.87	Pune	Solapur	Barshi	Pangri	Koregaon	420	18°26'0.02"N	75°44'47.49"E
	Waterholes	1	0.43302	0.43	Pune	Solapur	Barshi	Pangri	Koregaon	113	18°24'45.57"N	75°46'3.51"E
	Waterholes	1	0.43302	0.43	Pune	Solapur	Barshi	Pangri	Koregaon	175	18°24'22.44"N	75°46'11.56"E
	Waterholes	1	0.43302	0.43	Pune	Solapur	Barshi	Vairag	Chincholi	246	18° 9'52.47"N	75°56'35.51"E
	Waterholes	1	0.43302	0.43	Pune	Solapur	Barshi	Vairag	Chincholi	116	18°17'12.32"N	75°55'22.12"E
	Waterholes	1	0.43302	0.43	Pune	Solapur	Barshi	Vairag	Vairag	239	18° 5'48.06"N	75°43'56.47"E
	Waterholes	1	0.43302	0.43	Pune	Solapur	Barshi	Vairag	Vairag	169	17°59'15.48"N	75°49'30.36"E
	Waterholes	1	0.43302	0.43	Pune	Solapur	Barshi	Vairag	Vairag	47	18° 3'10.38"N	75°50'5.22"E
	Waterholes	2	0.43302	0.87	Pune	Solapur	Barshi	Vairag	Pangaon	284	18° 7'29.10"N	75°38'52.68"E
	Waterholes	1	0.43302	0.43	Pune	Solapur	Barshi	Vairag	Pangaon	92	18° 2'4.51"N	75°38'44.18"E
		54		**23.38**								
	Total Forest Pond	**187.00**		**151.20**								
iv	**Eradication of Invasive Species**											
	Eradication of Invasive Species Removal Glyricidia	20	0.2	4.00	Pune	Pune	Saswad	Saswad	Ambale		N 183715	E7741025
		15	0.2	3.00	Pune	Pune	Saswad	Parinche	Parinche		N 181063	E745325
		10	0.2	2.00	Pune	Pune	Saswad	Parinche	Pangari		N 183028	E740652
		20	0.2	4.00	Pune	Pune	Saswad	Saswad	Naraynpur	335	N 182872	E739645
		100	0.2	20.00	Pune	Bhor	Bhor	Bhor	Vasdgaon		N 180815	E735218
	Tota (i)	**165.00**		**33.00**								
	Total (h)			**184.20**								

Works proposed					Location of work						Latlong	
Sr No.	Item of work	Quantity / Area / Unit	Rate	Amount (Rs. in Lakhs	Circle	Division	Range	Round	Beat	Compartment No	Latitude	Longitude
1	2	3	4	5	6	7	8	9	10	11	12	13
5(2) (k)	establishment, operation and maintenance of animal rescue centre, and veterinary treatment facilities for wild animals;											
ii	Veterinary treatment facilities for wild animals	----	----	----	----	----	----	----	----	----		
	Hospital Equipments	LS	-	100.00	Pune	Junnar	Junnar	Junnar	Junnar		N 19.23 90 44"	E 073. 81 74 71"
	Medicine	LS	-	15.00	Pune	Junnar	Junnar	Junnar	Junnar		N 19.23 90 44"	E 073. 81 74 71"
	Total 5(2) (k) ii			**115.00**								
iii	Animal Seizing and capturing devices Purchasing Materials for Rescue Unit Bhamburda Pune	1	30	30	Pune	Pune	Bhamburda	Pachgaon Parvati	Kothrud	96	N 18 45 75 48	E 74 85 63 45
		16	3	48.00	Pune	Pune	Pune Division	Pune Division	Pune Division	--	N 18 45 75 96	E 74 85 96 25
		LS	L.S.	60.00	Pune	Junnar	All Ranges	All Round	All Beats	---		
		1	10.8	10.80	Pune	Bhor						
		8	0.25	2.00	Pune	Bhor						
		3	0.70	2.10	Pune	Bhor						
	Total 5(2) (k) iii			**152.90**								
iv	**Rescue emergency operations**											
	Rescue Emergnecey Expenditure	LS	LS	7.00	Pune	Junnar	Otur	All Round	All Beat			
		LS	LS	7.00	Pune	Junnar	Junnar	All Round	All Beat			
		LS	LS	7.00	Pune	Junnar	Shirur	All Round	All Beat			
		LS	LS	7.00	Pune	Junnar	Manchar	All Round	All Beat			
		LS	LS	7.00	Pune	Junnar	Ghodegaon	All Round	All Beat			
		LS	LS	7.00	Pune	Junnar	Khed	All Round	All Beat			
		LS	LS	7.00	Pune	Junnar	Chakan	All Round	All Beat			
	Reunion Of Leopard Cubs	LS	-	5.00	Pune	Junnar	All Ranges	--	--			
	Provision of Sign Boards along National /State Highways	LS	LS	10.00	Pune	Junnar	All Ranges	--	--			
	Purchase Equipment For Rescue emergency operations		Lumpsum	3.00	Pune	Bhor	Bhor	Bhor	Bhor		N 180948	E 735134
	Purchase Equipment For Rescue emergency operations		Lumpsum	3.00	Pune	Bhor	Nasrapur	Nasrapur	Nasrapur		N 181540	E 735305
	Purchase Equipment For Rescue emergency operations		Lumpsum	3.00	Pune	Bhor	saswad	saswad	saswad		N 182133	E 740105
	Purchase Equipment For Rescue emergency operations		Lumpsum	3.00	Pune	Bhor	Velhe	Velhe	Velhe		N 183018	E736445
	Total 5(2) (k) iv			**76.00**								

Works proposed					Location of work						Latlong	
Sr No.	Item of work	Quantity / Area / Unit	Rate	Amount (Rs. in Lakhs	Circle	Division	Range	Round	Beat	Compartment No	Latitude	Longitude
1	2	3	4	5	6	7	8	9	10	11	12	13
v	**Strengthening of Rapid rescue teams**											
	Purchase Equipment For Rapid Resque Team		Lumpsum	5.00	Pune	Bhor	Bhor	Bhor	Bhor		N 180948	E 735134
	Purchase Equipment For Rapid Resque Team		Lumpsum	5.00	Pune	Bhor	Nasrapur	Nasrapur	Nasrapur		N 181540	E 735305
	Purchase Equipment For Rapid Resque Team		Lumpsum	5.00	Pune	Bhor	saswad	saswad	saswad		N 182133	E 740105
	Purchase Equipment For Rapid Resque Team		Lumpsum	7.00	Pune	Bhor	Velhe	Velhe	Velhe		N 183018	E736445
	Total 5(2) (k) v			22.00								
	Total 5(2) K			**365.90**								
	Total Rule No. 5 (2) (80%) a to l			**3404.59**								
5 (3) (a)	**establishment, up-gradation and maintenance of modern nurseries and other planting stock production facilities with state of arts facilities for production of quality planting materials;**											
i	**Estblishment of modern / hightexh nurseries AND Upgradation / Maintenance of modern/high tech nurseries**											
	Establish High-tech Nursery	1	LS	10.00	Pune	Junnar	Junnar	Junnar	Junnar		N 19.23 90 44"	E 073. 81 74 71"
	Establish High-tech Nursery	2	LS	20.00	Pune	Junnar	Shirur	Shirur Shikrapur	Shirur Alagoan paga	169, 532	.N- 18.38'54	E-74'18'40,
	modern nurseries(for prepation of tall plant (12.5x25 c.m.))	1	LS	10.00	Pune	Bhor	Saswad	Parinche	Parinche		N 188105	E 747256
	Total 5 (3) (a)	**4**		**40.00**								
5(3) (d)	**construction of residential and official buildings in forests for concerned staffs up to the rank of Range Officers deployed for protection of forest and wildlife;**											
	Inspection Paths/Forest Road	1	5.00	5.00	pune	Junnar	Chakan	Alandi	Koyali	368	N 18 43 26.4	E 73 57 02.5
		1	2.00	2.00	pune	Junnar	Chakan	Chakan	Medankarwadi	355	N 18 43 17	E 73 52 27
	Watch Towers	1	10.00	10.00	Pune	Solapur	Solapur	Solapur	Solapur	345	N-17.71'12.34"	E-76.81'40.15"
		1	10.00	10.00	Pune	Solapur	Malshiras	Natepute	Natepute	242	N17.539'45"	E 74.441'94"
	Check Post	1	9.00	9.00	Pune	Junnar	Ghodegaon	Taleghar	Taleghar	171	N 19.090644	E 73.671559
	Total 5(3) (d)	**5**		**36.00**								

Works proposed					Location of work						Latlong	
Sr No.	Item of work	Quantity / Area / Unit	Rate	Amount (Rs. in Lakhs	Circle	Division	Range	Round	Beat	Compartment No	Latitude	Longitude
1	2	3	4	5	6	7	8	9	10	11	12	13
5(3) (e)	**Construction of residential and official buildings in forests for front line staffs deployed for protection of forest and wildlife**											
i	construction of forest guard quarter type I	1	22.00	22.00	Pune	Pune	Baramati	KARANJE	KARANJE	२७	N 18 10 87	E 74 27 22
		1	22.00	22.00	pune	Junnar	Khed	Shiroli	Shiroli	282	N18.819452	E73.873121
		1	22.00	22.00	Pune	Solapur	Solapur	Akkalkot	Waghdari		N-17.56'29.61"	E-76.72'55.01"
	Total Type I Quarter	**3**		**66.00**								
ii	construction of round officer quarter type II											
		1	26.00	26.00	Pune	Pune	Baramati	KARANJE	KARANJE	२७	N 18 10 87	E 74 27 22
		1	26	26.00	Pune	Solapur	Solapur	Akkalkot	Waghdari		N-17.56'32.96"	E-76.12'60.46"
	Total Type II Quarter	**2**		**52.00**								
iii	Construction of Type III Quarter											
		1	36.00	36.00	Pune	Pune	Bhamburda	Bhamburda	Bhamburda	S.No. 96 & 97	N 18 52 36 8	E 73 82 44
		1		**36.00**								
iii	Construction of Range Office											
		1	44.00	44.00	Pune	Pune	Bhamburda	Bhamburda	Bhamburda	S.No. 96 & 97	N 18 52 45 1	E 73 82 31 5
		1		**44.00**								
	Total 5(3) (e)	**7.00**		**198.00**								
5(3) H	Publicity-cum-awareness programme and exhibition on the various schemes being implemented by the State Authority from State Fund	LS		2	Pune	Pune						
		LS		2.00	Pune	Junnar	All Range					
		LS		2.00	Pune	Bhor	Solapur Division	Division	Division			
		LS		2.00	Pune	Solapur	All Range	All Range				
	Total 5(3) (h)			**8.000**								
	Total Rule No. 5 (3) (4) (20%) a ato j			**282.00**								
	Grant Total NPV			**3686.59**								

ANNUAL PLAN OF OPERATIONS 2022-23

FORMAT VII A---- Forestry and other activities proposed under Net Present Value amount (Please see Rule no. 5(2), 5(3), and proviso under Rule 5(3) (NPV - 04)

Thane Territorial Circle

	Works proposed				Location of work						Latlong	
	Item of work	**Quantity**	**Rate**	**Amount (Rs. in Lakhs**	**Circle**	**Division**	**Range**	**Round**	**Beat**	**Compartment No**	Latitude	Longitude
1	**2**	**3**	**4**	**5**	**6**	**7**	**8**	**9**	**10**	**11**	**12**	**13**
5 (2)	**Works under Not less than 80 % component (Rule 5 (2))**											
5(2) (a) (ii)	Assisted Natural Regeneration (FYO Works)	40.00	15796	6.32	Thane	Thane	Kalyan	Khadavali	Khadavali	raya Survey No. No.99	N 19º20'53.09"	E 73º12'24.71"
	Total	**40.00**		**6.32**		**THANE Division ANR**						
5(2) (a) (ii)	Assisted Natural Regeneration (FYO Works)	20.00	15796	3.16	Thane	Alibag	Nagothane	Kondgoan	Wasgoan East	405	N-18"34.13'39	E-073"10.16'97
		10.00	15796	1.58	Thane	Alibag	Nagothane	Kondgoan	Kondgoan West	414	N-18"34.45'00	E-73"08.15"00
		20.00	15796	3.16	Thane	Alibag	Nagothane	Kondgoan	Koleti	416	N-18"36.11'00	E-073"07.55'00
		25.00	15796	3.95	Thane	Alibag	Nagothane	Unhere	Rabgoan	398	N-18"53.50'00	E-073"20.63'10
		30.00	15796	4.74	Thane	Alibag	Nagothane	Kadsure	Bense	207 / 208	N-18"36.75'10	E-073"04.13'34
		15.00	15796	2.37	Thane	Alibag	Nagothane	Kadsure	Pigonda	215	N-18"31.90'70	E-073"06,11'14
		5.00	15796	0.79	Thane	Alibag	Nagothane	Kansai	Tamsoli	388	N-18"56.67'35	E-073"19,78'98
		10.00	15796	1.58	Thane	Alibag	Nagothane	Kansai	Hedvali	386	N-18"29.05'40	E-073"12,58'70
		10.00	15796	1.58	Thane	Alibag	Nagothane	Kansai	Balsai	381	N-18"50,84'77	E-073"15,40'57
		145.00		**22.90**	**TOTAL ALIBAG Division ANR**							
	5(2) (a) TOTAL	**185.00**	**0**	**29.22**	**TOTAL THANE CIRCLE ANR FYO**							
5(2)(b)	**Artificial Regeneration**											
5(2)(b) ii	Artificial Regeneration 4th YO Plantation	15.00	0.18	2.70	Thane	Thane	Padgha	Pachchapur	Nevada	Com.No 872	N 19 2752.3,	E 073 12 88.6
		15.00		**2.70**	**Thane Division AR Total**							
		21.00	0.18	3.78	Thane	Dahanu	Dahisar	Savra	Savra (N)	159	N19384405	E072.571463
		20.00	0.18	3.60	Thane	Dahanu	Dahisar	Ganja	Dhekale	132	N19617266	E072.902017
		20.00	0.18	3.60	Thane	Dahanu	Dahisar	Durves	Embur	163	N19.676086	E072.934921
		10.00	0.18	1.80	Thane	Dahanu	Dahisar	Dahisar	Pargaon	171	N19.596463	E072.884367
		10.00	0.18	1.80	Thane	Dahanu	Dahisar	Kuda	Khaira	158	N19.617266	E072.955465
		30.00	0.18	5.40	Thane	Dahanu	Bhatane	Bhatane	Bhatane	139	N19.524135	E072.930502
		25.00	0.18	4.50	Thane	Dahanu	Bhatane	Sakvar	Bharol	134	N19.589072	E072.916761
		25.00	0.18	4.50	Thane	Dahanu	Bhatane	Jayshet	Bahirponda	156	N19.635443	E072.913392
		161.00		**28.98**	**Dahanu Division AR Total**							

	Works proposed				Location of work						Latlong	
	Item of work	**Quantity**	**Rate**	**Amount (Rs. in Lakhs**	**Circle**	**Division**	**Range**	**Round**	**Beat**	**Compartment No**	Latitude	Longitude
1	**2**	**3**	**4**	**5**	**6**	**7**	**8**	**9**	**10**	**11**	**12**	**13**
5(2)(b) ii	Artificial Regeneration 4th YO Plantation	15.00	0.18	2.70	Thane	Shahapur	Khardi	Kashti	Dhamani	Com.No.664	N 19°34'31.3"	E 73°25'02.1"
		20.00	0.18	3.60	Thane	Shahapur	Khardi	Dapur	Bandalwadi	Com.No.580	N 19°40'81.2"	E 73°22'82.5"
		25.00	0.18	4.50	Thane	Shahapur	Shahapur	Shera`	Ambarje	Com.No 845	N 19°21'27.4"	E 73°17'30.6"
		25.00	0.18	4.50	Thane	Shahapur	Dolkhamb	Sakurli	Sakurli	Sr.No 310	N 19°30'63.6"	E 73°38'58.0"
		25.00	0.18	4.50	Thane	Shahapur	Vihigaon	Kasara	Paradhwadi	Com.No.592	N 19°40'24.0"	E 73°29'18.8"
		25.00	0.18	4.50	Thane	Shahapur	Washala	Sakadbav	Sakadbav	Com.No.623	N 19°31'83.2"	E 73°29'55.7"
		25.00	0.18	4.50	Thane	Shahapur	Washala	Pingalwadi	Dhakane	Com.No.628	N 19°33'57.5"	E 73°32'33.7"
		160.00		**28.80**	**Shahapur Division AR Total**							
		25.00	0.18	4.50	Thane	Jawhar	Vihigaon	Kiniste	Kiniste	Com.No.569	N 19°42'42.9"	E 73°23'20.9"
		25.00		**4.50**	**Jawhar Division AR Total**							
		40.00	0.18	7.20	Thane	Alibag	Sudhagad	Majre Jambhulpada	Shiddeshwar Kh.	Usar 648	N1847904	E7322180
		40.00		**7.20**	**Alibag Division AR Total**							
Artificial Regeneration 4th YO		**401.00**		**72.18**	**THANE CIRCLE AR TOTAL**							
	5(2)(b)	**401.00**		**72.18**								
5(2)(d)	**Protection of plantations and forests**											
i	Encroachment removal and Forest Protection	200.00	13000	26.00	Thane	Thane	Padgha	-	-	Gavthan	N 19.21.53	E 73.10.23
		200.00	13000	26.00	Thane	Thane	Thane	Kalwa	shil	194, 38	N19°14 98 31	E 73°04 25 89
		200.00	13000	26.00	Thane	Thane	Bhiwandi	Joo	Kaneri	S No 14/2	N 19.298233	E 73.065254
		300.00	13000	39.00	Thane	Thane	Kalyan	Kalyan	Kalyan	Maharal 45/a	19°14'4406"N.	73°10'0979"E
		900.00		**117.00**		**Thane**						
ii	Survey Demarcation & Fencing Sensetive Forest Area	400.00	13000	52.00	Thane	Thane	Bhiwandi	Joo	Kaneri	S No 148	N 19.307967	E 73.064876
		1200.00	13000	156.00	Thane	Thane	Thane	Rabale, Shil, Mumbra	Rabale, Shil, Mumbra	194, 38	N19°14 98 31	E 73°04 25 89
		860.00	13000	111.80	Thane	Thane	Padgha	Vadpa	Vahuli	132	19°21'51.56"N	73° 8'35.17"E
					Thane	Thane	Padgha	Vadpa	pogaon	1035	19°18'19.11"N	73° 5'42.02"E
					Thane	Thane	Padgha	Vadpa	Lonad	1034pt	19°19'57.45"N	73° 6'55.28"E
		350.00	13000	45.50	Thane	Thane	Kalyan	Kalyan	Pisavli	50	N 19°12.921	E 73°07.255
	Fencing	350.00	13000	45.50	Thane	Thane	Kalyan	Kunda	Mhaskal	35 &36	19°14'4406"N.	73°10'0979"E
		3160.00		**410.80**		**Thane**						

	Works proposed				Location of work						Latlong	
	Item of work	Quantity	Rate	Amount (Rs. in Lakhs	Circle	Division	Range	Round	Beat	Compartment No	Latitude	Longitude
1	2	3	4	5	6	7	8	9	10	11	12	13
	Protection Wall Matheran Office East site	1.00	297697	2.98	Thane	Alibag	Matheran	Neral	Neral	Takka Gaonthan	N 19.0303.49	E 73.31.7213
	Protection Wall Matheran Office West site	1.00	299282	2.99	Thane	Alibag	Matheran	Neral	Neral	S.No. 335	N 19.03036	E 73.31708
	Protection Wall Matheran Office South site	1.00	291973	2.92	Thane	Alibag	Matheran	Neral	Neral	S.No. 335	N 19.030381	E 73.317256
	Protection Wall Matheran Office North site	1.00	300000	3.00	Thane	Alibag	Matheran	Neral	Neral	S.No. 335	N 19.030144	E 73.317113
	Construction of d compound wall at Sahangoti Depot At Alibag	1.00	1600000	16.00	Thane	Alibag	Alibag	Kavir	Kavir	S.No. 335	N183810	E725523
	Construction of cement concrete pannalled compound wall at Kajrat (Karjat West Range)	1.00	2475658	24.76	Thane	Alibag	Karjat W	Karjat	Karjat	Karjat S.No.16/B,14/ 1A+2A	N18.90782	E73.319348
	Construction of cement concrete pannalled compound wall at Kajrat (Karjat East Range)	1.00	2412779	24.13	Thane	Alibag	Karjat East	Karjat	Karjat	Karjat S.No.16/B,14/ 1A+2A	N18.90782	E73.319348
	Wall Compound to Nigade Nursery	1.00	1147091	11.47	Thane	Alibag	Wadkhal	Nigade	Nigade	C.No. 418	N18.62.13.	E7308816
	Wire Fencing above Compound Wall At Sajgaon Depot Khalapur	1.00	300000	3.00	Thane	Alibag	Khalapur	Khopoli	Khopoli South	Takai Sur No.22	N 18 47 55.46 N 18 47 55.46	E 073 18 36.24 E 073 18 36.76
	Sajgaon depo Wall Compund Hight Extent Length 550 per meter around	550.00	14000	77.00	Thane	Alibag	Khalapur	Khopoli	Khopoli South	Takai Sur No.22	N 18 47 55.46 N 18 47 55.46	E 073 18 36.24 E 073 18 36.76
	Sajgaon Depo	24.00	11990	2.88	Thane	Alibag	Khalapur	Khopoli	Khopoli South	Takai Sur No.22	N 18 47 55.46 N 18 47 55.46	E 073 18 36.24 E 073 18 36.76
		583		**171.1224**		**Alibag**						
iii	Boundry Pillar Class I	545.00	0.08	43.60	Thane	Alibag	Karjat East	Humgaon	Bhaliwadi	Sr.No.02	N18.57.08	E73.23.09
					Thane	Alibag	Karjat East	Humgaon	Bhaliwadi	38	N18.56.44	E73.22.43
					Thane	Alibag	Karjat East	Humgaon	Bhaliwadi	44	N18.96.11	E73.37.28
					Thane	Alibag	Karjat East	Humgaon	Bhaliwadi	35/1B	N18.59.03	E72.24.33
					Thane	Alibag	Karjat East	Humgaon	Bhaliwadi	35/1A	N18.58.40	E73.24.20
					Thane	Alibag	Karjat East	Humgaon	Bhaliwadi	13/1B	N18.97.10	E73.40.02
					Thane	Alibag	Karjat East	Humgaon	Bhaliwadi	14	N18.56.52	E73.23.27
					Thane	Alibag	Karjat East	Humgaon	Bhaliwadi	37	N18.56.52	E73.23.27
					Thane	Alibag	Karjat East	Humgaon	Bhaliwadi	41	N18.56.27	E73.22.53

	Works proposed				Location of work						Latlong	
	Item of work	**Quantity**	**Rate**	**Amount (Rs. in Lakhs**	**Circle**	**Division**	**Range**	**Round**	**Beat**	**Compartment No**	Latitude	Longitude
1	**2**	**3**	**4**	**5**	**6**	**7**	**8**	**9**	**10**	**11**	**12**	**13**
iii	Boundry Pillar Class I	343.00	0.08	27.44	Thane	Alibag	Karjat East	Khandape	Kondhana	46	N18.85.63	E73.38.03
					Thane	Alibag	Karjat East	Khandape	Kondhana	17	N18.86.44	E73.37.00
					Thane	Alibag	Karjat East	Khandape	Salape	8	N18.85.81	E73.39.43
					Thane	Alibag	Karjat East	Khandape	Chochi	15	N18.86.18	E73.36.51
					Thane	Alibag	Karjat East	Khandape	Chochi	17	N18.86.18	E73.36.50
					Thane	Alibag	Karjat East	Khandape	Chochi	86	N18.85.77	E73.35.17
					Thane	Alibag	Karjat East	Khandape	Chochi	76	N18.85.87	E73.35.17
		12.00	0.08	0.96	Thane	Alibag	Karjat East	Dhamni	Kothimba	7|6	N18.59.42	E73.27.14
					Thane	Alibag	Karjat East	Dhamni	Kothimba	7\2	N18.59.42	E73.27.14
					Thane	Alibag	Karjat East	Dhamni	Kothimba	6\3	N18.59.44	E73.27.20
		900		**72.00**	**Alibag Total**							
iv	Boundry Pillar Class II	402.00	0.04	16.08	Thane	Alibag	Karjat East	Humgaon	Bhaliwadi	Sr.No.02	N18.57.08	E73.23.09
					Thane	Alibag	Karjat East	Humgaon	Bhaliwadi	38	N18.56.44	E73.22.43
					Thane	Alibag	Karjat East	Humgaon	Bhaliwadi	44	N18.96.11	E73.37.28
					Thane	Alibag	Karjat East	Humgaon	Bhaliwadi	35/1B	N18.59.03	E72.24.33
					Thane	Alibag	Karjat East	Humgaon	Bhaliwadi	35/1A	N18.58.40	E73.24.20
					Thane	Alibag	Karjat East	Humgaon	Bhaliwadi	13/1B	N18.97.10	E73.40.02
					Thane	Alibag	Karjat East	Humgaon	Bhaliwadi	14	N18.56.52	E73.23.27
					Thane	Alibag	Karjat East	Humgaon	Bhaliwadi	37	N18.56.52	E73.23.27
					Thane	Alibag	Karjat East	Humgaon	Bhaliwadi	41	N18.56.27	E73.22.53
		190.00	0.04	7.60	Thane	Alibag	Karjat East	Khandape	Kondhana	46	N18.85.63	E73.38.03
					Thane	Alibag	Karjat East	Khandape	Kondhana	17	N18.86.44	E73.37.00
					Thane	Alibag	Karjat East	Khandape	Salape	8	N18.85.81	E73.39.43
					Thane	Alibag	Karjat East	Khandape	Chochi	15	N18.86.18	E73.36.51
					Thane	Alibag	Karjat East	Khandape	Chochi	17	N18.86.18	E73.36.50
					Thane	Alibag	Karjat East	Khandape	Chochi	86	N18.85.77	E73.35.17
					Thane	Alibag	Karjat East	Khandape	Chochi	76	N18.85.87	E73.35.17
		13.00	0.04	0.52	Thane	Alibag	Karjat East	Dhamni	Kothimba	7|6	N18.59.42	E73.27.14
					Thane	Alibag	Karjat East	Dhamni	Kothimba	7\2	N18.59.42	E73.27.14
					Thane	Alibag	Karjat East	Dhamni	Kothimba	6\3	N18.59.44	E73.27.20
		605		**24.20**								

	Works proposed				Location of work						Latlong	
	Item of work	**Quantity**	**Rate**	**Amount (Rs. in Lakhs**	**Circle**	**Division**	**Range**	**Round**	**Beat**	**Compartment No**	Latitude	Longitude
1	**2**	**3**	**4**	**5**	**6**	**7**	**8**	**9**	**10**	**11**	**12**	**13**
v	Construction, upgradation and maintenance of **protecion camps**/Forst Custody etc.	1.00	20	20.00	Thane	Thane	Thane	Thane	Thane	Gat No.50	N 19.178183	E 72.968657
		1.00	20	20.00	Thane	Thane	Mumbai	Thane	Thane	S.no.22	19°10'41"N.	72°58'30"E
		1.00	20	20.00	Thane	Thane	Bhiwandi	Joo	Kaneri	S No 14/2	N 19.298233	E 73.065254
		1.00	20	20.00	Thane	Thane	Padgha	-	-	Gavthan	N 19.21.53	E 73.10.23
		1.00	20	20.00	Thane	Thane	Kalyan	Kalyan	Kalyan	Maharal 45/a	19°14'4406"N.	73°10'0979"E
iv	Construction Of Labour Shed	1.00	6.00	6.00	Thane	|Thane	Murbad E	Murbad	Murbad	772	19°15'965"N.	73°23'431"E
x	Construction of Labour Shed	1.00	6	6.00	Thane	Roha	Mangaon	Mangaon	Mangaon	S.No.135	N18458.7	E0731710.5
	Total	**7.00**		**112.00**								
	Improving mobility of frontline staff for forest protection & patrolling	**LS**		**2.00**	Thane	Thane						
		LS		**2.00**	Thane	Dahanu						
		LS		**2.00**	Thane	Shahapur						
		LS		**2.00**	Thane	Jawhar						
		LS		**2.00**	Thane	Alibag						
		LS		**2.00**	Thane	Roha						
	Total	**0.00**		**12.00**								
	5(2)(d)	**6155.00**		**919.12**								
5(2)(f)	**Forest fire prevention and control operations**			0.00								
i	Cutting and burning of fires lines 12 Mtr	6.85	7945.92	0.54	Thane	Thane	Thane	Kalwa	Kalwa/Mumbra	1149	19°11'49.90"N	73° 0'52.66"E
		8.25	7945.92	0.66	Thane	Thane	Thane	Kalwa	Kalwa/Mumbra	1150	19°11'4.37"N	73° 0'46.94"E
		7.72	7945.92	0.61	Thane	Thane	Thane	Kalwa	Kalwa/Mumbra	1151	19° 9'54.36"N	73° 0'46.98"E
		10.00	7945.92	0.79	Thane	Thane	Thane	Kalwa	Mumbra	1152	19° 9'7.67"N	73° 1'15.33"E
		7.48	7945.92	0.59	Thane	Thane	Thane	Kalwa	Rabale/ Shile	1153	19° 8'28.58"N	73° 1'38.28"E
		8.86	7945.92	0.70	Thane	Thane	Thane	Kalwa	Rabale/ Shile	1154 pt	19° 7'42.13"N	73° 1'35.07"E
		7.69	7945.92	0.61	Thane	Thane	Thane	Sahabaj	Ghansoli	1154pt	19° 7'49.78"N	73° 2'47.97"E
		7.31	7945.92	0.58	Thane	Thane	Thane	Sahabaj	Mahape	1155	19° 7'24.70"N	73° 2'13.46"E
		7.30	7945.92	0.58	Thane	Thane	Thane	Sahabaj	Mahape	1156	19° 6'31.32"N	73° 2'47.38"E
		6.52	7945.92	0.52	Thane	Thane	Thane	Sahabaj	Sahabaj	1157	19° 5'41.47"N	73° 2'12.11"E
		77.98		**6.20**								

	Works proposed				Location of work						Latlong	
	Item of work	**Quantity**	**Rate**	**Amount (Rs. in Lakhs**	**Circle**	**Division**	**Range**	**Round**	**Beat**	**Compartment No**	Latitude	Longitude
1	**2**	**3**	**4**	**5**	**6**	**7**	**8**	**9**	**10**	**11**	**12**	**13**
i	Cutting and burning of fires lines 12 Mtr	10.50	7945.92	0.83	Thane	Thane	Kalyan	Kalyan	Kalyan	823 Part	N19.124080	E 73.134770
		9.50	7945.92	0.75	Thane	Thane	Kalyan	Kalyan	Kalyan	824 part	N19.219738	E 73.206633
		10.50	7945.92	0.83	Thane	Thane	Kalyan	Kunda	Kunda	832	N19.269700	E 73.206633
		11.50	7945.92	0.91	Thane	Thane	Kalyan	Kunda	Kunda	831 part	N19.267626	E 73.300377
		12.50	7945.92	0.99	Thane	Thane	Kalyan	Kunda	Adivali	833	N19.311227	E 73.288145
		12.50	7945.92	0.99	Thane	Thane	Kalyan	Kunda	Adivali	834	N19.175100	E73.162600
		12.50	7945.92	0.99	Thane	Thane	Kalyan	Kunda	Kelni	831 part	N 19.263702	E 73.302527
		12.50	7945.92	0.99	Thane	Thane	Kalyan	Kunda	Kelni	829	N19.299552	E73.307310
		7.50	7945.92	0.60	Thane	Thane	Kalyan	Khadavali	Khadavali	837	N 19.23700	E73.16200
		8.50	7945.92	0.68	Thane	Thane	Kalyan	Khadavali	Khadavali	838	N19.29244	E 73.16754
		8.70	7945.92	0.69	Thane	Thane	Kalyan	Khadavali	Khadavali	839 part	N19.221800	E73.153900
		12.50	7945.92	0.99	Thane	Thane	Kalyan	Khadavali	Kosla	839part	N19.221500	E73.153700
		8.50	7945.92	0.68	Thane	Thane	Kalyan	Khadavali	palsoli	840part	N 19.21180	E 73.16220
		7.50	7945.92	0.60	Thane	Thane	Kalyan	Khadavali	palsoli	841 part	N19.21086	E 73.16379
		6.00	7945.92	0.48	Thane	Thane	Kalyan	Khadavali	palsoli	842part	N19.211671	E73.164997
		6.00	7945.92	0.48	Thane	Thane	Kalyan	Khadavali	palsoli	843part	N19.225800	E73.172700
		8.50	7945.92	0.68	Thane	Thane	Kalyan	Khadavali	falegaon	835	N19.186000	E73.151000
		5.50	7945.92	0.44	Thane	Thane	Kalyan	Khadavali	falegaon	841part	N19.21150	E 73.16550
		7.50	7945.92	0.60	Thane	Thane	Kalyan	Khadavali	Aarela	836	N19.195300	E73.956000
		6.50	7945.92	0.52	Thane	Thane	Kalyan	Khadavali	Aarela	840part	N 19.23180	E 73.17150
		5.60	7945.92	0.44	Thane	Thane	Kalyan	Khadavali	Aarela	841part	N 19.34060	E 73.26730
		7.50	7945.92	0.60	Thane	Thane	Kalyan	Dahagaon	Poi	826	N 19.130400	E 73.180700
		6.50	7945.92	0.52	Thane	Thane	Kalyan	Dahagaon	Poi	827	N19.218926	E 73.261609
		6.50	7945.92	0.52	Thane	Thane	Kalyan	Dahagaon	Poi	828	N19.148000	E 73.152500
		5.50	7945.92	0.44	Thane	Thane	Kalyan	Dahagaon	Poi	825	N 19.249300	E 73.22400
		5.60	7945.92	0.44	Thane	Thane	Kalyan	Dahagaon	Bapsai	830	N 19.144500	E73.152000
		7.50	7945.92	0.60	Thane	Thane	Kalyan	Dahagaon	Aapti	829 part	N19.258312	E 73.309492
		229.90		**18.27**								

	Works proposed				Location of work						Latlong	
	Item of work	Quantity	Rate	Amount (Rs. in Lakhs	Circle	Division	Range	Round	Beat	Compartment No	Latitude	Longitude
1	2	3	4	5	6	7	8	9	10	11	12	13
i	Cutting and burning of fires lines 12 Mtr	2.30	7945.92	0.18	Thane	Thane	Badlapur	Sonavala	Kahnor	804 pt	N 19.07749	E 73.15197
		1.48	7945.92	0.12	Thane	Thane	Badlapur	Sonavala	Kahnor	805 pt	N 19.082928	E 73.170978
		4.21	7945.92	0.33	Thane	Thane	Badlapur	Sonavala	Karav	802 pt	N 19.080906	E 73.191505
		4.42	7945.92	0.35	Thane	Thane	Badlapur	Sonavala	Karav	803 pt	N 19.073749	E 73.15197
		1.90	7945.92	0.15	Thane	Thane	Badlapur	Sonavala	Karav	804 pt	N 19.074441	E 73.175417
		3.39	7945.92	0.27	Thane	Thane	Badlapur	Sonavala	Chargaon	799 pt	N 19.094796	E 73.2121
		1.31	7945.92	0.10	Thane	Thane	Badlapur	Sonavala	Chargaon	801 pt	N 19.082983	E 73.214389
		4.95	7945.92	0.39	Thane	Thane	Badlapur	Sonavala	Chargaon	798 pt	N 19.103966	E 73.205781
		3.79	7945.92	0.30	Thane	Thane	Badlapur	Sonavala	Pimpoli	798 pt	N 19.104322	E 73.195803
		3.39	7945.92	0.27	Thane	Thane	Badlapur	Sonavala	Pimpoli	799 pt	N 19.094796	E 73.212000
		2.82	7945.92	0.22	Thane	Thane	Badlapur	Sonavala	Pimpoli	800 pt	N 19.090717	E 73.202194
		1.38	7945.92	0.11	Thane	Thane	Badlapur	Wagani	Dahiwali	814 pt	N 19.074953	E 73.141417
		3.19	7945.92	0.25	Thane	Thane	Badlapur	Wagani	Dahiwali	820 pt	N 19.080603	E 73.124915
		6.65	7945.92	0.53	Thane	Thane	Badlapur	Wagani	Chamtoli	810 pt	N 19.075222	E 73.153274
		7.50	7945.92	0.60	Thane	Thane	Badlapur	Wagani	Chamtoli	811 pt	N 19.052795	E 73.135893
		4.57	7945.92	0.36	Thane	Thane	Badlapur	Wagani	Chamtoli	812 pt	N 19.094796	E 73.737897
		3.51	7945.92	0.28	Thane	Thane	Badlapur	Wagani	Chamtoli	813 pt	N 19.06469	E 73.125213
		3.57	7945.92	0.28	Thane	Thane	Badlapur	Wagani	Chamtoli	814 pt	N 19.073676	E 73.12454
		2.13	7945.92	0.17	Thane	Thane	Badlapur	Wagani	Goregaon	806 pt	N 19.044085	E 73.175565
		5.21	7945.92	0.41	Thane	Thane	Badlapur	Wagani	Goregaon	807 pt	N 19.056322	E 73.175566
		3.46	7945.92	0.27	Thane	Thane	Badlapur	Wagani	Goregaon	808 pt	N 19.041481	E 73.175567
		5.64	7945.92	0.45	Thane	Thane	Badlapur	Wagani	Goregaon	809 pt	N 19.045508	E 73.175568
		5.47	7945.92	0.43	Thane	Thane	Badlapur	Wagani	Goregaon	810 pt	N 19.050611	E 73.175569
		7.50	7945.92	0.60	Thane	Thane	Badlapur	Wagani	Goregaon	811 pt	N 19.052795	E 73.135893
		1.81	7945.92	0.14	Thane	Thane	Badlapur	Wagani	Chinchvali	806 pt	N 19.195176	E 73.175571
		5.64	7945.92	0.45	Thane	Thane	Badlapur	Wagani	Chinchvali	809 pt	N 19.052795	E 73.175572
		2.13	7945.92	0.17	Thane	Thane	Badlapur	Wagani	Dhavala	806 pt	N 19.044085	E 73.175573
		5.64	7945.92	0.45	Thane	Thane	Badlapur	Wagani	Dhavala	809 pt	N 19.045508	E 73.175568
		7.46	7945.92	0.59	Thane	Thane	Badlapur	Karand	Asnoli	797 pt	N 19.112154	E 73.175575

	Works proposed				Location of work						Latlong	
	Item of work	Quantity	Rate	Amount (Rs. in Lakhs	Circle	Division	Range	Round	Beat	Compartment No	Latitude	Longitude
1	2	3	4	5	6	7	8	9	10	11	12	13
	Cutting and burning of fires lines 12 Mtr	3.28	7945.92	0.26	Thane	Thane	Badlapur	Karand	Chandap	794 pt	N 19.131127	E 73.175576
		4.53	7945.92	0.36	Thane	Thane	Badlapur	Karand	Chandap	795 pt	N 19.123112	E 73.175577
		3.51	7945.92	0.28	Thane	Thane	Badlapur	Karand	Chandap	796 pt	N 19.123003	E 73.175578
		4.95	7945.92	0.39	Thane	Thane	Badlapur	Karand	Chandap	798 pt	N 19.103966	E 73.175579
		9.58	7945.92	0.76	Thane	Thane	Badlapur	Ambha	Ambha	815 pt	N 19.081408	E 73.175580
		3.37	7945.92	0.27	Thane	Thane	Badlapur	Ambha	Ambha	816pt	N 19.073079	E 73.175581
		3.03	7945.92	0.24	Thane	Thane	Badlapur	Ambha	Ambha	817pt	N 19.070201	E 73.175582
		3.88	7945.92	0.31	Thane	Thane	Badlapur	Ambha	Bohonoli	815 pt	N 19.0747	E 73.175583
		3.38	7945.92	0.27	Thane	Thane	Badlapur	Ambha	Bohonoli	816 pt	N 19.073079	E 73.175584
		3.20	7945.92	0.25	Thane	Thane	Badlapur	Ambha	Bohonoli	818 pt	N 19.083743	E 73.175585
		4.61	7945.92	0.37	Thane	Thane	Badlapur	Ambha	Bohonoli	819 pt	N 19.090921	E 73.175586
		3.31	7945.92	0.26	Thane	Thane	Badlapur	Ambernath	Ambernath	823 pt	N 19.120184	E 73.175587
		3.73	7945.92	0.30	Thane	Thane	Badlapur	Ambernath	Ambernath	824 pt	N 19.225689	E 73.175588
		1.67	7945.92	0.13	Thane	Thane	Badlapur	Ambernath	Shirgaon	820 pt	N 19.081372	E 73.175589
		3.08	7945.92	0.24	Thane	Thane	Badlapur	Ambernath	Shirgaon	821 pt	N 19.225689	E 73.175588
		4.76	7945.92	0.38	Thane	Thane	Badlapur	Ambernath	Shirgaon	822 pt	N 19.095931	E 73.175591
		3.31	7945.92	0.26	Thane	Thane	Badlapur	Ambernath	Kohoj	823 pt	N 19.120184	E 73.175587
		3.73	7945.92	0.30	Thane	Thane	Badlapur	Ambernath	Kohoj	824 pt	N 19.225689	E 73.175588
		1.79	7945.92	0.14	Thane	Thane	Badlapur	Ambernath	Dapivali	825 pt	N 19.123167	E 73.175594
		2.36	7945.92	0.19	Thane	Thane	Badlapur	Ambernath	Dapivali	826 pt	N 19.123543	E 73.175595
		191.48		**15.21**								
i	Cutting and burning of fires lines 12 Mtr	8.56	7945.92	0.68	Thane	Thane	Murbad (East)	Shirvali	Shirvali	769 Part	N 19.224403°	E 73.437997°
		9.36	7945.92	0.74	Thane	Thane	Murbad (East)	Shirvali	Shirvali	770 Part	N 19.237810°	E 73.425896°
		5.12	7945.92	0.41	Thane	Thane	Murbad (East)	Shirvali	Shirvali	771 Part	N 19.236668°	E 73.414008°
		12.30	7945.92	0.98	Thane	Thane	Murbad (East)	Shirvali	Shirvali	772 Part	N 19.229135°	E 73.408843°
		11.90	7945.92	0.95	Thane	Thane	Murbad (East)	Shirvali	Manivali	768 Part	N 19.197381°	E 73.412478°
		5.12	7945.92	0.41	Thane	Thane	Murbad (East)	Shirvali	Manivali	772 Part	N 19.217225°	E 73.405085°
		10.00	7945.92	0.79	Thane	Thane	Murbad (East)	Shirvali	Manivali	766	N 19.201726°	E 73.383260°
		11.90	7945.92	0.95	Thane	Thane	Murbad (East)	Shirvali	Sasane	768 Part	N 19.206283°	E 73.409052°

	Works proposed				Location of work						Latlong	
	Item of work	Quantity	Rate	Amount (Rs. in Lakhs	Circle	Division	Range	Round	Beat	Compartment No	Latitude	Longitude
1	2	3	4	5	6	7	8	9	10	11	12	13
i	Cutting and burning of fires lines 12 Mtr	8.56	7945.92	0.68	Thane	Thane	Murbad (East)	Shirvali	Bhuvan	769 Part	N 19.232892°	E 73.442862°
		9.36	7945.92	0.74	Thane	Thane	Murbad (East)	Shirvali	Bhuvan	770 Part	N 19.241773°	E 73.427805°
		12.30	7945.92	0.98	Thane	Thane	Murbad (East)	Shirvali	Bhuvan	771 Part	N 19.259576°	E 73.424917°
		12.80	7945.92	1.02	Thane	Thane	Murbad (East)	Saralgaon	Khandape	776	N 19.302698°	E 73.453876°
		11.40	7945.92	0.91	Thane	Thane	Murbad (East)	Saralgaon	Khandape	775 Part	N 19.287002°	E 73.437930°
		11.80	7945.92	0.94	Thane	Thane	Murbad (East)	Murbad	Murbad	773	N 19.268962°	E 73.400003°
		5.14	7945.92	0.41	Thane	Thane	Murbad (East)	Murbad	Murbad	774 Part	N 19.273884°	E 73.407313°
		5.62	7945.92	0.45	Thane	Thane	Murbad (East)	Murbad	Murbad	772 Part	N 19.238675°	E 73.394924°
		11.40	7945.92	0.91	Thane	Thane	Murbad (East)	Murbad	Pimpalgaon	775 Part	N 19.290676°	E 73.404553°
		12.80	7945.92	1.02	Thane	Thane	Murbad (East)	Murbad	Pimpalgaon	776	N 19.304913°	E 73.427904°
		6.53	7945.92	0.52	Thane	Thane	Murbad (East)	Murbad	Pimpalgaon	777	N 19.319092°	E 73.417947°
		5.10	7945.92	0.41	Thane	Thane	Murbad (East)	Murbad	Pimpalgaon	778	N 19.311346°	E 73.382285°
		10.10	7945.92	0.80	Thane	Thane	Murbad (East)	Murbad	Moharai	779	N 19.291987°	E 73.390720°
		197.17		**15.67**								
i	Cutting and burning of fires lines 12 Mtr	13.90	7945.92	1.10	Thane	Thane	Murbad West	Mohaghar	Aagashi	757	N-19° 8'7.35	E-73°27'16.32
		13.30	7945.92	1.06	Thane	Thane	Murbad West	Mohaghar	Aagashi	758	N-19° 8'1.20	E-73°26'12.46
		8.99	7945.92	0.71	Thane	Thane	Murbad West	Mohaghar	Mhasa	759	N-19° 9'18.88	E-73°25'58.38
		12.90	7945.92	1.03	Thane	Thane	Murbad West	Mohaghar	Mhasa	760	N-19° 9'34.30	E-73°25'0.54
		10.00	7945.92	0.79	Thane	Thane	Murbad West	Mohaghar	Mohaghar	761	N-19° 9'22.83	E-73°24'19.39
		9.00	7945.92	0.72	Thane	Thane	Murbad West	Mohaghar	Mohaghar	762pt	N-19° 9'46.45	E-73°23'36.30
		5.00	7945.92	0.40	Thane	Thane	Murbad West	Mohaghar	Shiland	762pt	N-19° 9'25.10	E-73°22'56.28
		9.31	7945.92	0.74	Thane	Thane	Murbad West	Mohaghar	Shiland	763	N-19°10'9.82	E-73°22'37.18
		14.80	7945.92	1.18	Thane	Thane	Murbad West	Mohaghar	Shiland	764	N-19°10'17.48	E-73°21'38.49
		11.00	7945.92	0.87	Thane	Thane	Murbad West	Kishor	Shirgaon	780	N-19°17'59.61	E-73°22'7.92
		5.69	7945.92	0.45	Thane	Thane	Murbad West	Kishor	Hireghar	781pt	N-19°18'59.93	E-73°18'51.43
		2.41	7945.92	0.19	Thane	Thane	Murbad West	Kishor	Hireghar	781pt	N-19°19'9.11	E-73°17'52.61
		0.75	7945.92	0.06	Thane	Thane	Murbad West	Kishor	Hireghar	781pt	N-19°19'19.62	E-73°18'11.18
		10.10	7945.92	0.80	Thane	Thane	Murbad West	Kishor	Hireghar	782	N-19°17'46.32	E-73°17'32.87
		7.28	7945.92	0.58	Thane	Thane	Murbad West	Kishor	Hireghar	783	N-19°17'44.31	E-73°18'40.18

	Works proposed				Location of work						Latlong	
	Item of work	Quantity	Rate	Amount (Rs. in Lakhs	Circle	Division	Range	Round	Beat	Compartment No	Latitude	Longitude
1	2	3	4	5	6	7	8	9	10	11	12	13
	Cutting and burning of fires lines 12 Mtr	9.13	7945.92	0.73	Thane	Thane	Murbad West	Kishor	Karvela	784	N-19°17'16.03	E-73°19'26.70
		11.90	7945.92	0.95	Thane	Thane	Murbad West	Kishor	Kishor	785	N-19°16'53.84	E-73°20'54.83
		13.70	7945.92	1.09	Thane	Thane	Murbad West	Kishor	Kishor	786	N-19°15'43.30	E-73°19'48.86
		9.84	7945.92	0.78	Thane	Thane	Murbad West	Kola	Ghorale	787	N-19°15'23.31	E-73°18'47.50
		11.80	7945.92	0.94	Thane	Thane	Murbad West	Kola	Ghorale	788	N-19°14'17.95	E-73°20'5.71
		7.61	7945.92	0.60	Thane	Thane	Murbad West	Kola	Kola	789	N-19°14'6.37	E-73°21'43.84
		9.29	7945.92	0.74	Thane	Thane	Murbad West	Kola	Kola	790	N-19°13'22.81	E-73°22'23.75
		7.82	7945.92	0.62	Thane	Thane	Murbad West	Kola	Masale	791pt	N-19°13'35.41	E-73°21'13.91
		5.67	7945.92	0.45	Thane	Thane	Murbad West	Kola	Masale	791pt	N-19°12'56.56	E-73°20'40.65
		8.86	7945.92	0.70	Thane	Thane	Murbad West	Kola	Belpada	792	N-19°13'21.52	E-73°20'36.46
		1.79	7945.92	0.14	Thane	Thane	Murbad West	Kola	Belpada	793pt	N-19°13'56.41	E-73°18'29.57
		10.00	7945.92	0.79	Thane	Thane	Murbad West	Kola	Belpada	793pt	N-19°13'40.94	E-73°19'44.71
		241.84		**19.22**								
	Cutting and burning of fires lines 12 Mtr	3.20	7945.92	0.25	Thane	Thane	Tokawade S	Pendhari	Vaishakhare	735	N -19.298607	E- 73.659695
		3.50	7945.92	0.28	Thane	Thane	Tokawade S	Pendhari	Vaishakhare	733	N-19.298838	E 73.664395
		2.10	7945.92	0.17	Thane	Thane	Tokawade S	Pendhari	Pendhari	736	N-19° 2622	E-73°664437
		3.50	7945.92	0.28	Thane	Thane	Tokawade S	Pendhari	Pendhari	737	N-19° 280718	E- 73°668108
		2.40	7945.92	0.19	Thane	Thane	Tokawade S	Pendhari	Pendhari	738	N -19° 292615	E- 73°676606
		2.40	7945.92	0.19	Thane	Thane	Tokawade S	Pendhari	Palu	739	N -19° 1523	E- 73°4026
		4.10	7945.92	0.33	Thane	Thane	Tokawade S	Pendhari	Palu	740	N -19° 255278	E- 73°658213
		3.10	7945.92	0.25	Thane	Thane	Tokawade S	Pendhari	Palu	741pt	N -19° 1503	E- 73°3911
		3.70	7945.92	0.29	Thane	Thane	Tokawade S	Sonavala	Dhasai	734	N -19° 282577	E- 73°587902
		3.50	7945.92	0.28	Thane	Thane	Tokawade S	Sonavala	Sonavala	742	N -19° 239119	E- 73°643872
		2.70	7945.92	0.21	Thane	Thane	Tokawade S	Sonavala		741	N -19° 247380	E- 73°644004
		3.20	7945.92	0.25	Thane	Thane	Tokawade S	Sonavala	Kalambad	744	N-19°227195	E- 73°606796
		3.60	7945.92	0.29	Thane	Thane	Tokawade S	Sonavala	Sonavala	743	N -19°220724	E- 73°624542
		3.50	7945.92	0.28	Thane	Thane	Tokawade S	Sonavala	Milhe	745	N -19°206894	E- 73°585449
		2.60	7945.92	0.21	Thane	Thane	Tokawade S	Moroshi	Moroshi	724	N -19°19444	E- 73°42101
		3.20	7945.92	0.25	Thane	Thane	Tokawade S	Moroshi	Moroshi	1161	N -19°19372	E- 73°44002

	Works proposed				Location of work						Latlong	
	Item of work	Quantity	Rate	Amount (Rs. in Lakhs	Circle	Division	Range	Round	Beat	Compartment No	Latitude	Longitude
1	2	3	4	5	6	7	8	9	10	11	12	13
	Cutting and burning of fires lines 12 Mtr	3.60	7945.92	0.29	Thane	Thane	Tokawade S	Moroshi	Moroshi	1162	N -19°19566	E- 73°42038
		2.50	7945.92	0.20	Thane	Thane	Tokawade S	Moroshi	Thitabi	720	N -19°21201	E- 73°46525
		3.70	7945.92	0.29	Thane	Thane	Tokawade S	Moroshi	Thitabi	721	N -19°20344	E- 73°46095
		2.10	7945.92	0.17	Thane	Thane	Tokawade S	Moroshi	Savarne	722	N -19°20090	E- 73°45046
		2.60	7945.92	0.21	Thane	Thane	Tokawade S	Moroshi	Divanpada	725	N -19°18478	E- 73°45042
		2.50	7945.92	0.20	Thane	Thane	Tokawade S	Moroshi	Divanpada	726	N -19°18418	E- 73°40231
		2.20	7945.92	0.17	Thane	Thane	Tokawade S	Moroshi	Bhorande	1163	N - 19°18265	E- 73°42001
		2.60	7945.92	0.21	Thane	Thane	Tokawade S	Moroshi	Bhorande	1164	N -19°17430	E- 73°40091
		72.10		**5.73**								
	Cutting and burning of fires lines 12 Mtr	2.10	7945.92	0.17	Thane	Thane	Tokawade N	Talegaon	shiroshi	700 p	19°25'29.52"N.	73°39'35.64"E
		3.20	7945.92	0.25	Thane	Thane	Tokawade N	Talegaon	Talegaon North	700	19°25'29.41"N.	73°38'39.37"E
		3.10	7945.92	0.25	Thane	Thane	Tokawade N	Talegaon	Talegaon North	701	19°26'7.84"N.	73°40'46.48"E
		3.50	7945.92	0.28	Thane	Thane	Tokawade N	Talegaon	Talegaon South	703	19°24'39.69"N.	73°40'22.48"E
		2.30	7945.92	0.18	Thane	Thane	Tokawade N	Talegaon	Talegaon South	702	19°25'13.17"N.	73°40'58.69"E
		2.40	7945.92	0.19	Thane	Thane	Tokawade N	Talegaon	Fangloshi	704	19°24'17.49"N.	73°40'51.17"E
		3.40	7945.92	0.27	Thane	Thane	Tokawade N	Talegaon	Fangloshi	705	19°23'17.31"N.	73°40'53.27"E
		3.10	7945.92	0.25	Thane	Thane	Tokawade N	Khutal	Khutal	706	19°22'40.35"N.	73°40'38.16"E
		3.70	7945.92	0.29	Thane	Thane	Tokawade N	Khutal	Merdi south	707	19°22'35.66"N.	73°40'39.10"E
		3.50	7945.92	0.28	Thane	Thane	Tokawade N	Khutal	Merdi south	708	19°24'10.52"N.	73°41'32.96"E
		2.70	7945.92	0.21	Thane	Thane	Tokawade N	Khutal	Merdi north	709	19°25'35.17"N.	73°41'57.03"E
		3.20	7945.92	0.25	Thane	Thane	Tokawade N	Khutal	Merdi north	710	19°25'20.25"N.	73°42'39.89"E
		3.60	7945.92	0.29	Thane	Thane	Tokawade N	Khutal	Modhalwadi	711	19°24'47.90"N.	73°43'19.75"E
		3.50	7945.92	0.28	Thane	Thane	Tokawade N	Khutal	Modhalwadi	712	19°22'59.78"N.	73°42'55.32"E
		2.80	7945.92	0.22	Thane	Thane	Tokawade N	Nyahadi	Kelewadi	713	19°22'53.41"N.	73°43'27.94"E
		3.30	7945.92	0.26	Thane	Thane	Tokawade N	Nyahadi	Kelewadi	714	19°23'40.76"N.	73°43'50.79"E
		3.60	7945.92	0.29	Thane	Thane	Tokawade N	Nyahadi	Kelewadi	715	19°23'11.72"N.	73°44'53.67"E
		2.50	7945.92	0.20	Thane	Thane	Tokawade N	Nyahadi	Kelewadi	716	19°22'31.53"N.	73°45'30.30"E
		3.70	7945.92	0.29	Thane	Thane	Tokawade N	Nyahadi	Phangulgawha n	717	19°21'46.75"N.	73°44'54.68"E
		2.10	7945.92	0.17	Thane	Thane	Tokawade N	Nyahadi	Phangulgawha n	718	19°22'0.66"N.	73°45'54.45"E

	Works proposed				Location of work						Latlong	
	Item of work	Quantity	Rate	Amount (Rs. in Lakhs	Circle	Division	Range	Round	Beat	Compartment No	Latitude	Longitude
1	2	3	4	5	6	7	8	9	10	11	12	13
	Cutting and burning of fires lines 12 Mtr	2.60	7945.92	0.21	Thane	Thane	Tokawade N	Nyahadi	Phangulgawha n	719	19°21'52.01"N.	73°46'42.39"E
		2.50	7945.92	0.20	Thane	Thane	Tokawade N	Tokawade	Fangane	727	19°19'32.48"N.	73°38'41.65"E
		2.20	7945.92	0.17	Thane	Thane	Tokawade N	Tokawade	Fangane	728p	19°20'23.05"N.	73°38'56.28"E
		2.60	7945.92	0.21	Thane	Thane	Tokawade N	Tokawade	Chasole	728p	19°20'54.01"N.	73°38'16.20"E
		3.10	7945.92	0.25	Thane	Thane	Tokawade N	Tokawade	Mal	729	19°20'51.43"N.	73°37'11.66"E
		2.90	7945.92	0.23	Thane	Thane	Tokawade N	Tokawade	Mal	730	19°20'36.21"N.	73°36'5.66"E
		3.80	7945.92	0.30	Thane	Thane	Tokawade N	Tokawade	Kochare	731	19°21'6.17"N.	73°35'26.49"E
		3.90	7945.92	0.31	Thane	Thane	Tokawade N	Tokawade	Tokawade	732	19°19'46.18"N.	73°36'30.94"E
		2.50	7945.92	0.20	Thane	Thane	Tokawade N	Tokawade	Tokawade	733	19°18'46.69"N.	73°37'37.84"E
		87.40		**6.94**								
	Cutting and burning of fires lines 12 Mtr	14.7	7945.92	1.17	Thane	Thane	Padgha	Dhighashi	Kandali	1015	19°28'56.31"N	73°10'5.46"E
		9.58	7945.92	0.76	Thane	Thane	Padgha	Dhighashi	Kandali	1012	19°30'48.54"N	73° 8'21.86"E
		8.51	7945.92	0.68	Thane	Thane	Padgha	Dhighashi	Dhighashi	1013	19°28'39.16"N	73° 6'57.96"E
		8.6	7945.92	0.68	Thane	Thane	Padgha	Dhighashi	Shedgaon	1014	19°28'1.39"N	73° 7'37.56"E
		14.7	7945.92	1.17	Thane	Thane	Padgha	Dhighashi	Kandali	1015	19°28'56.38"N	73°10'5.45"E
		10	7945.92	0.79	Thane	Thane	Padgha	Dhighashi	Sahagaon	1016	19°29'56.66"N	73°10'18.69"E
		8.75	7945.92	0.70	Thane	Thane	Padgha	Pachyapur	Mnada	1017	19°28'35.23"N	73°12'6.17"E
		7.34	7945.92	0.58	Thane	Thane	Padgha	Pachyapur	Pachyapur	1018	19°26'34.40"N	73°11'31.73"E
		9.12	7945.92	0.72	Thane	Thane	Padgha	Pachyapur	Pachyapur	1019	19°26'28.67"N	73°12'3.73"E
		8.93	7945.92	0.71	Thane	Thane	Padgha	Pachyapur	Khanivali	1020	19°26'4.82"N	73°12'41.39"E
		7.59	7945.92	0.60	Thane	Thane	Padgha	Pachyapur	Khanivali	1021	19°25'49.56"N	73°13'28.37"E
		10.4	7945.92	0.83	Thane	Thane	Padgha	Pachyapur	Khanivali	1022	19°25'35.53"N	73°14'5.66"E
		7.14	7945.92	0.57	Thane	Thane	Padgha	Pachyapur	Pachyapur	1023	19°25'57.91"N	73°10'43.15"E
		8.9	7945.92	0.71	Thane	Thane	Padgha	Pachyapur	Pachyapur	1024	19°24'55.91"N	73°10'13.70"E
		9.47	7945.92	0.75	Thane	Thane	Padgha	Kirvali	Lap	1025	19°25'17.65"N	73° 9'48.11"E
		8	7945.92	0.64	Thane	Thane	Padgha	Padgha	Dalepada	1026	19°24'12.76"N	73° 9'27.03"E
		11	7945.92	0.87	Thane	Thane	Padgha	Kirvali	Lap	1027	19°24'42.96"N	73° 8'49.80"E
		50.6	7945.92	4.02	Thane	Thane	Padgha	Kirvali	Lap	ESZ Tansa	19°28'31.73"N	73°12'5.76"E
		7.79	7945.92	0.62	Thane	Thane	Padgha	Kirvali	Kirvli	1028	19°25'38.65"N	73° 6'44.65"E

	Works proposed				Location of work						Latlong	
	Item of work	Quantity	Rate	Amount (Rs. in Lakhs	Circle	Division	Range	Round	Beat	Compartment No	Latitude	Longitude
1	2	3	4	5	6	7	8	9	10	11	12	13
	Cutting and burning of fires lines 12 Mtr	7.62	7945.92	0.61	Thane	Thane	Padgha	Kirvali	Koshimbe	1029	19°24'59.99"N	73° 7'26.19"E
		14.2	7945.92	1.13	Thane	Thane	Padgha	Vadpe	Vahuli	1030	19°21'40.31"N	73° 7'41.73"E
		10.7	7945.92	0.85	Thane	Thane	Padgha	Vadpe	Vadpe	1031	19°21'43.69"N	73° 8'6.62"E
		8.72	7945.92	0.69	Thane	Thane	Padgha	Vadpe	Vahuli	1032	19°21'51.56"N	73° 8'35.17"E
		9.96	7945.92	0.79	Thane	Thane	Padgha	Vadpe	Vadpe	1033	19°19'39.87"N	73° 7'59.20"E
		9.38	7945.92	0.75	Thane	Thane	Padgha	Vadpe	Vadpe	1034	19°19'57.45"N	73° 6'55.28"E
		9.3	7945.92	0.74	Thane	Thane	Padgha	Vadpe	Pogaon	1035	19°18'19.11"N	73° 5'42.02"E
		5.55	7945.92	0.44	Thane	Thane	Padgha	Vadpe	Pogaon	1036	19°17'35.22"N	73° 5'59.25"E
		296.55		**23.56**								
	Cutting and burning of fires lines 12 Mtr	8.00	7945.92	0.64	Thane	Thane	Bhiwandi	Joo	Kambe	1037 Pt	N 19 20' 1.49"	E 73 2' 48.69"
		8.00	7945.92	0.64	Thane	Thane	Bhiwandi			1038	N 19 20' 9.20"	E 73 2' 4.20"
		8.00	7945.92	0.64	Thane	Thane	Bhiwandi		Tembhivali	1039	N 19 20' 54.78'	E 73 1' 46.95"
		7.00	7945.92	0.56	Thane	Thane	Bhiwandi			1040	N 19 21' 35.35'	E 73 1' 45.56"
		7.50	7945.92	0.60	Thane	Thane	Bhiwandi		Lakhivali	1043	N 19 22' 29.39"	E 73 2' 22.17"
		6.00	7945.92	0.48	Thane	Thane	Bhiwandi	Chimbipada	Chimbipada	1047	N 19 23' 45.42'	E 73 1' 28.38"
		8.00	7945.92	0.64	Thane	Thane	Bhiwandi		Pimpalshet	1057	N 19 25' 18.15"	E 73 1' 18.03"
		7.20	7945.92	0.57	Thane	Thane	Bhiwandi			1058	N 19 26' 10.35'	E 73 0' 48.31"
		6.50	7945.92	0.52	Thane	Thane	Bhiwandi			1059	N 19 26' 11.13"	E 73 1' 39.98"
		2.00	7945.92	0.16	Thane	Thane	Bhiwandi		Amrai	1076	N 19 23' 54.75"	E 72 58' 55.04"
		10.50	7945.92	0.83	Thane	Thane	Bhiwandi	Dugad	Malbidi	1054	N 19 24' 56.43'	E 73 3' 32.10"
		7.30	7945.92	0.58	Thane	Thane	Bhiwandi		Mohili	1055	N 19 25' 46.42'	E 73 2' 47.32"
		7.50	7945.92	0.60	Thane	Thane	Bhiwandi		Dugad	1060	N 19 26' 18.37'	E 73 2' 58.13"
		7.00	7945.92	0.56	Thane	Thane	Bhiwandi			1061	N 19 26' 51.93'	E 73 2' 26.15"
		7.00	7945.92	0.56	Thane	Thane	Bhiwandi		Ghotgaon South	1062	N 19 27' 26.35"	E 73 2' 10.89
		6.50	7945.92	0.52	Thane	Thane	Bhiwandi		Ghotgaon North	1063	N 19 28' 22.64'	E 73 1' 59.00"
		11.00	7945.92	0.87	Thane	Thane	Bhiwandi	Parivali	Sakroli	1053	N 19 24' 28.55'	E 73 3' 40.20"
		6.70	7945.92	0.53	Thane	Thane	Bhiwandi			1052	N 19 24' 22.31'	E 73 2' 22.50
		6.00	7945.92	0.48	Thane	Thane	Bhiwandi			1056	N 19 25' 35.35	E 73 2' 10.36"
		6.50	7945.92	0.52	Thane	Thane	Bhiwandi		Angaon	1045	N 19 22' 38.61'	E 73 3' 49.63"

	Works proposed				Location of work						Latlong	
	Item of work	**Quantity**	**Rate**	**Amount (Rs. in Lakhs**	**Circle**	**Division**	**Range**	**Round**	**Beat**	**Compartment No**	Latitude	Longitude
1	**2**	**3**	**4**	**5**	**6**	**7**	**8**	**9**	**10**	**11**	**12**	**13**
	Cutting and burning of fires lines 12 Mtr	8.90	7945.92	0.71	Thane	Thane	Bhiwandi			1046	N 19 23' 11.08"	E 73 2' 41.80"
		8.50	7945.92	0.68	Thane	Thane	Bhiwandi		Parivali	1044	N 19 21' 43.54"	E 73 3' 0.67"
		5.50	7945.92	0.44	Thane	Thane	Bhiwandi			1037 pt	N 19 20' 23.16'	E 73 3' 5.65"
		2.00	7945.92	0.16	Thane	Thane	Bhiwandi			1038 pt	N 19 20' 40.75"	E 73 2' 33.04"
		7.00	7945.92	0.56	Thane	Thane	Bhiwandi	Kuhe	Palivali	1125	N 19 21' 18.52"	E 73 59' 40.89"
		8.40	7945.92	0.67	Thane	Thane	Bhiwandi		Kuhe	1105	N 19 23' 14.35"	E 72 58' 0.25"
		6.80	7945.92	0.54	Thane	Thane	Bhiwandi		Tepacha pada	1124	N 19 21' 10.97"	E 72 59' 5.32"
		191.30		**15.20**								
	Fire line Total	**1585.72**		**126.00**		**Thane**						
	Cutting and burning of fires lines 3M	71.44	1341.22 PER KM	0.95	THANE	Jawhar	Mokhada	Aasa	Aasa	105, 104	N 20°00' 619	E 73°19' 010
					THANE	Jawhar	Mokhada	Aasa	Dhamodi	100, 101, ,102	N 20°02' 753	E 73°17' 760
					THANE	Jawhar	Mokhada	Aasa	Berista	103, 111	N 20°00' 585	E 73°22' 039
	Cutting and burning of fires lines 6M	17.52	1828..94 PER KM	0.32	THANE	Jawhar	Mokhada	Chas	Chas	110, 109	N 19°58' 813	E 73°19'486
					THANE	Jawhar	Mokhada	Chas	Bhovadi	106, 108	N 20°00'358	E 73°18' 105
					THANE	Jawhar	Mokhada	Mokhada	Mokhada	116,	N 19°54' 014	E 73°19' 622
	Cutting and burning of fires lines 12M	72.68	3007.58 PER KM	2.18	THANE	Jawhar	Mokhada	Mokhada	Nilmati	112,	N 19°57' 353	E 73°26' 199
					THANE	Jawhar	Mokhada	Mokhada	Gonda bu.	113, 114,	N 19°55' 735	E 73°24' 621
					THANE	Jawhar	Mokhada	Mokhada	Khoch	115	N 19°53' 814	E 73°25' 218
	Cutting and burning of fires lines 3M	137.12	1341.22 PER KM	1.83	THANE	Jawhar	Sawa	Tilonda	Tilonda	36, 34, 40, 37	N 19°57' 993	E 73°04' 314
					THANE	Jawhar	Sawa	Tilonda	Dhamani	31, 32, 33, 35	N 19°56' 031	E 73°03' 858
					THANE	Jawhar	Sawa	Akra	Akra	47, 51, 50,49	N 19°56' 449	E 73°07' 745
					THANE	Jawhar	Sawa	Akra	Karhe	57, 52, 53	N 19°53' 797	E 73°08' 040
					THANE	Jawhar	Sawa	Akra	Talavali	38	N 19°53' 528	E 73°07' 070
					THANE	Jawhar	Sawa	Sawa	Sawa pt	70, 69, 68	N 19°54' 179	E 73°04' 901
					THANE	Jawhar	Sawa	Sawa	Kasa bu	65	N 19°53' 852	E 73°03' 000
	Cutting and burning of fires lines 6M	25.75	1828.28PER KM	0.47	THANE	Jawhar	Sawa	Sawa	Kunj	66, 67, 63, 64	N 19°53'176	E 73°03' 465
					THANE	Jawhar	Sawa	Vehelpada .N	Vehelpada .N	56, 54, 55	N 19°53'018	E 73°08' 376
					THANE	Jawhar	Sawa	Vehelpada .N	Vehelpada S	59, 58	N 19°52'865	E 73°06' 854
					THANE	Jawhar	Sawa	Vehelpada .N	Medhi N	61, 60	N 19°51'515	E 73°04'797

	Works proposed				Location of work						Latlong	
	Item of work	Quantity	Rate	Amount (Rs. in Lakhs	Circle	Division	Range	Round	Beat	Compartment No	Latitude	Longitude
1	2	3	4	5	6	7	8	9	10	11	12	13
	Cutting and burning of fires lines 12M	24.73	3007.58 PER KM	0.74	THANE	Jawhar	Sawa	Vehelpada .N	Medhi S	62	N 19°51'157	E 73°03' 692
					THANE	Jawhar	Sawa	Khronda	Khronda N	42, 43	N 19°59'299	E 73°07'022
					THANE	Jawhar	Sawa	Khronda	Khronda S	41, 39, 45	N 19°59'165	E 73°06' 087
					THANE	Jawhar	Sawa	Khronda	Pimpalshet	46	N 19°57'973	E 73°07' 635
					THANE	Jawhar	Sawa	Khronda	Ozar	44	N 20°00'640	E 73°06' 632
	Cutting and burning of fires lines 3M	133.61	1341.22 PER KM	1.79	THANE	Jawhar	W Wada	Wada	Kadiwali	190	N 19°40'503	E 73°07' 606
					THANE	Jawhar	W Wada	Wada	Alman	189, 188, 187	N 19°38'374	E 73°06' 422
					THANE	Jawhar	W Wada	Wada	Wada	192, 191	N 19°40'751	E 73°08'725
					THANE	Jawhar	W Wada	Khupari	Khupari	173, 172	N 19°33'078	E 73°06'490
					THANE	Jawhar	W Wada	Neharoli	Neharoli	170, 171	N 19°34'629	E 73°07'519
					THANE	Jawhar	W Wada	Neharoli	Chikhala	167, 164, 169	N 19°36'284	E 73°08'737
				0.22	THANE	Jawhar	W Wada	Gunj	Nichole	185, 186	N 19°35'315	E 73°05'498
	Cutting and burning of fires lines 6M	12.51	1828.28PER KM		THANE	Jawhar	W Wada	Gunj	Lohapa	175, 174, 177	N 19°31'743	E 73°03'717
					THANE	Jawhar	W Wada	Gunj	Kelthan	176	N 19°00'884	E 73°02'649
					THANE	Jawhar	W Wada	Palsai	Asanas	182, 181	N 19°34'776	E 72°59'951
					THANE	Jawhar	W Wada	Palsai	Awandha	183, 184	N 19°35'937	E 72°59'618
	Cutting and burning of fires lines 12M	67.23	3007.58 PER KM	2.02	THANE	Jawhar	W Wada	Palsai	Kalmbahai	180, 178	N 19°33'698	E 73°01'009
					THANE	Jawhar	W Wada	Palsai	Palsai	179	N 19°3'025	E 73°02'044
					THANE	Jawhar	W Wada	Sonsiv	Mandwa S.	153, 152	N 19°41'941	E 73°11'569
					THANE	Jawhar	W Wada	Sonsiv	Sonsiv	162, 163	N 19°41'000	E 73°12'20
					THANE	Jawhar	W Wada	Sonsiv	Dhae	164, 165	N 19°40'137	E 73°10'070
	Cutting and burning of fires lines 3M	156.93	1341.22 PER KM	2.10	THANE	Jawhar	Kanchad	Kanchad	Galtare	203, 202	N 19°41'420	E 72°57'783
					THANE	Jawhar	Kanchad	Kanchad	Shelta	201, 199, 200	N 19°39.785	E 72°59.935
					THANE	Jawhar	Kanchad	Kanchad	Kanchad	198, 204	N 19°41.008	E 72°59.781
	Cutting and burning of fires lines 6M	12.55	1828..94 PER KM	0.22	THANE	Jawhar	Kanchad	Posheri	Posheri	207, 208, 197	N 19°40.169	E 73°03.017
					THANE	Jawhar	Kanchad	Posheri	Indgaon	205, 206	N 19°42.433	E 73°03.110
					THANE	Jawhar	Kanchad	Posheri	Pali	194, 195, 196	N 19°39.475	E 73°04.066
	Cutting and burning of fires lines 12M	83.46	3007.58 PER KM	2.50	THANE	Jawhar	Kanchad	Uprale	Uprale	212, 214	N 19°47.066	E 73°01.865
					THANE	Jawhar	Kanchad	Uprale	Kurze	211, 213, 210	N 19°46.524	E 73°01.667
					THANE	Jawhar	Kanchad	Uprale	Aalonda	215, 209, 216, 218	N 19°43.046	E 73°03.586
					THANE	Jawhar	Kanchad	Uprale	Utavali	193, 219, 217	N 19°42.447	E 73°42.447

	Works proposed				Location of work						Latlong	
	Item of work	**Quantity**	**Rate**	**Amount (Rs. in Lakhs**	**Circle**	**Division**	**Range**	**Round**	**Beat**	**Compartment No**	Latitude	Longitude
1	**2**	**3**	**4**	**5**	**6**	**7**	**8**	**9**	**10**	**11**	**12**	**13**
	Cutting and burning of fires lines 3M	104.32	1341.22 PER KM	1.39	THANE	Jawhar	E.Wada	Mangrul	Sakharshet	141, 142, 143	N 19º46.973	E 73º14.039
					THANE	Jawhar	E.Wada	Mangrul	Mangrul	144	N 19º45.625	E 73º13.144
					THANE	Jawhar	E.Wada	Mangrul	Bhokarpada	138, 136, 137	N 19º46.010	E 73º15.116
	Cutting and burning of fires lines 6M	30.62	1828..94 PER KM	0.56	THANE	Jawhar	E.Wada	Bhoirpada	Pinjal	146, 145	N 19º46.335	E 73º12.475
					THANE	Jawhar	E.Wada	Bhoirpada	Dabhon	147, 148	N 19º45.382	E 73º10.785
					THANE	Jawhar	E.Wada	Bhoirpada	GarGaon	156	N 19º43.165	E 73º12.286
	Cutting and burning of fires lines 12M	49.70	3007.58 PER KM	1.49	THANE	Jawhar	E.Wada	Pik	Manivali	149	N 19º42.667	E 73º09.604
					THANE	Jawhar	E.Wada	Pik	Pik	150, 151	N 19º43.563	E 73º11.020
					THANE	Jawhar	E.Wada	Pik	N.Mandva	154, 155	N 19º43.262	E 73º12.627
					THANE	Jawhar	E.Wada	Shela	Shela	161, 159	N 19º40.838	E 73º13.587
					THANE	Jawhar	E.Wada	Shela	Kolimsarovar	160, 157, 158	N 19º42.392	E 73º13.869
					THANE	Jawhar	E.Wada	Ujjani	Ujjani	134, 139	N 19º47.182	E 73º16.325
					THANE	Jawhar	E.Wada	Ujjani	Ghaipatpada	132, 135	N 19º46.599	E 73º16.768
					THANE	Jawhar	E.Wada	Akhada	Akhada	129, 130, 131	N 19º47.420	E 73º17.465
					THANE	Jawhar	E.Wada	Akhada	Vadavli	133, 140	N 19º47.987	E 73º15.958
		1000.17		**18.78**								
	Total Fire line	**2585.89**		**144.78**								
	Fire watchers	16.00	15493	2.48	THANE	Jawhar	South Jawhar	Jawhar	Garadwadi	251, 252	N19.90897	E73.18863
					THANE	Jawhar	South Jawhar	Jawhar	Kuturvihir	248	N19.934039	E73.204725
					THANE	Jawhar	South Jawhar	Jawhar	Kadachimet	26,02,55,261	N19.858222	E73.209347
					THANE	Jawhar	South Jawhar	Jawhar	Kasatwadi	2,53,254	N19.888756	E73.188356
					THANE	Jawhar	South Jawhar	Dengachimet	Dengachimet	250	N19.897013	E73.146282
					THANE	Jawhar	South Jawhar	Dengachimet	Shoiroshi	257, 256	N19.87475	E73.16650
					THANE	Jawhar	South Jawhar	Dengachimet	Kashivali	259, 258	N 19º882841	E 73º185265
					THANE	Jawhar	South Jawhar	Zap	Zap	267, 270 ,271	N19.823064	E73.292984
					THANE	Jawhar	South Jawhar	Zap	Nandgaon	272, 273	N19.835981	E73.340109
					THANE	Jawhar	South Jawhar	Pathardi	Pathardi	268 , 261, 262	N19.847541	E73.257087
					THANE	Jawhar	South Jawhar	Pathardi	Aina	264, 263 , 265	N19.822585	E73.226159
					THANE	Jawhar	South Jawhar	Pathardi	Wanganpada	266, 269, 274	N19.50.16	E73.13.10

	Works proposed				Location of work						Latlong	
	Item of work	Quantity	Rate	Amount (Rs. in Lakhs	Circle	Division	Range	Round	Beat	Compartment No	Latitude	Longitude
1	2	3	4	5	6	7	8	9	10	11	12	13
	Fire watchers	14.00	15493	2.17	THANE	Jawhar	North Jawhar	Dabheri	Dabheri	85, 89	N20.0505	E073.1256
					THANE	Jawhar	North Jawhar	Dabheri	Dahul	92	N20.0423	E073.1409
					THANE	Jawhar	North Jawhar	Dabheri	Bopdari	71	N19.564072	E73.104104
					THANE	Jawhar	North Jawhar	Vavar	Vavar pt	93, 94	N20.059781	E73.250060
					THANE	Jawhar	North Jawhar	Vavar	Behedpada	91, ,97 ,90	N20.0620	E73.1451
					THANE	Jawhar	North Jawhar	Vavar	Dhadhari	84, 83	N20.0454	E073.1308
					THANE	Jawhar	North Jawhar	Vinval	Sarsun	96, 82 ,80	N20.01837042	E073.13372
					THANE	Jawhar	North Jawhar	Vinval	Hateri	99, 98	N20.059781	E73.176362
					THANE	Jawhar	North Jawhar	Aptale	Aptale	67,13	N19.5407	E073.1552
					THANE	Jawhar	North Jawhar	Aptale	Ghivanda	107	N19.5940	E073.1636
					THANE	Jawhar	North Jawhar	Ayra	Ayra	74, 75 , 71 ,249	N19.564072	E73.104104
					THANE	Jawhar	North Jawhar	Ayra	Kogda	76, 81 , 80	N19.564981	E73.101219
					THANE	Jawhar	North Jawhar	Palshin	Palshin	78, 77, 48	N19.5707	E73.0813
					THANE	Jawhar	North Jawhar	Palshin	Morchapada	79,	N19.5833	E73.0822
		20.00	15493	3.10	THANE	Jawhar	Khodala	Nasera	Nasera	67	N 19°81' 54.58"	E 73°40' 87.53"
					THANE	Jawhar	Khodala	Nasera	Dolhara	55,57	N 19°83' 06.27"	E 73°41' 15.91"
					THANE	Jawhar	Khodala	Nasera	Adoshi	47,48	N 19°47' 36.7"	E 73°23' 07.4"
					THANE	Jawhar	Khodala	Kurlod	Pathardi	19, 118, 120	N 19°47' 18"	E 73°21' 14"
					THANE	Jawhar	Khodala	Kurlod	Botoshi	125, 121	N 19°46' 46"	E 73°20' 00"
					THANE	Jawhar	Khodala	Kurlod	Kurlod	122, 123, 124	N 19°47' 28"	E 73°18' 55"
					THANE	Jawhar	Khodala	Koshimset	Koshimset	126, 127	N 19°83' 779"	E 73°35' 533"
					THANE	Jawhar	Khodala	Koshimset	Washala	128	N 19°51' 26.76"	E 73°22' 12.06"
					THANE	Jawhar	Khodala	Koshimset	Palsunda	117	N 19°86431	E 73°411717
					THANE	Jawhar	Khodala	Kiniste	Kochala	568	N 19.727519	E 73.437769
					THANE	Jawhar	Khodala	Kiniste	Kiniste	569	N 19.729957	E 73.414563
					THANE	Jawhar	Khodala	Karegaon	Karegoa	563	N 19.73585	E 73.456721
					THANE	Jawhar	Khodala	Karegaon	Pachaghar	567	N 19.753391	E 73.462483

	Works proposed				Location of work						Latlong	
	Item of work	**Quantity**	**Rate**	**Amount (Rs. in Lakhs**	**Circle**	**Division**	**Range**	**Round**	**Beat**	**Compartment No**	Latitude	Longitude
1	**2**	**3**	**4**	**5**	**6**	**7**	**8**	**9**	**10**	**11**	**12**	**13**
	Fire watchers	21.00	15493	3.25	THANE	Jawhar	Vikramgad	Sakhare	Sakhare	240, 238, 233	N 19.797111	E 073 .197318
					THANE	Jawhar	Vikramgad	Sakhare	Chouk	239, 242	N 19 47 445	E 073 11 325
					THANE	Jawhar	Vikramgad	Sakhare	Medha	236, 237	N 19.802525	E 73.221107
					THANE	Jawhar	Vikramgad	Sakhare	Valvanda	259, 234	N 19.826155	E 73.19228
					THANE	Jawhar	Vikramgad	Sakhare	Khuded	257	N 19.51 773	E 073 08 317
					THANE	Jawhar	Vikramgad	Pochada	Waki	242,244, 245	N 19 .46 364,	E 73. 09 299
					THANE	Jawhar	Vikramgad	Pochada	Khand	247, 246	N 19.783645	E 73.128344
					THANE	Jawhar	Vikramgad	Pochada	Pochada pt	241	N 19.786471	E 73.144668
					THANE	Jawhar	Vikramgad	Vikramgad	Onde, Sajan	226217	N 19 45 4781,	E 73 061 203
					THANE	Jawhar	Vikramgad	Vikramgad	Dadade	223, 222, 221, 220	N 19 51 08 81,	E 073 02 24.70
					THANE	Jawhar	Vikramgad	Balapur	Balapur	225, 227	N 19 49 2140,	E 073 04 28.40
					THANE	Jawhar	Vikramgad	Balapur	Ambeghar	229, 228	N 19.861119	E 73.125462
					THANE	Jawhar	Vikramgad	Balapur	Sevta	231, 230, 232	N 19.837834	E 73.127418
					THANE	Jawhar	Vikramgad	Balapur	Kegva	224	N 19 49 56.0527,	E 073 04.20923
		71.00		**11.00**								
	Fire watchers	**264.00**	11412.00	30.13	Thane	**Alibag**	Karjat East	Khandas,Dhamani,Dhak,Humgoan,Khandpe	All Beats			
		264.00		**30.13**								
	TOTAL FIRE WATCHER	**335.00**		**41.13**								
5(2)(f)	Total Fire protection	**2920.89**		**185.91**								

	Works proposed				Location of work						Latlong	
	Item of work	Quantity	Rate	Amount (Rs. in Lakhs	Circle	Division	Range	Round	Beat	Compartment No	Latitude	Longitude
1	2	3	4	5	6	7	8	9	10	11	12	13
5(2)(g)	**Soil and moisture conservationwork in the forest SMC Work**											
i	Gabian	2.00	0.5	1.00	Thane	Thane	Kalyan	Dahagaon	Poi	826	N 19.130400	E 73.180700
		2.00	0.5	1.00	Thane	Thane	Kalyan	Dahagaon	Bapsai	830	N 19.144500	E73.152000
		2.00	0.5	1.00	Thane	Thane	Kalyan	Dahagaon	Aapti	829 part	N19.258312	E 73.309492
		2.00	0.5	1.00	Thane	Thane	Badlapur	Ambernath	Shirgaon	821 pt	N 19.225689	E 73.175588
		2.00	0.5	1.00	Thane	Thane	Badlapur	Ambernath	Kohoj	823 pt	N 19.120184	E 73.175587
		2.00	0.5	1.00	Thane	Thane	Badlapur	Ambernath	Dapivali	825 pt	N 19.123167	E 73.175594
		2.00	0.5	1.00	Thane	Thane	Murbad East	Manivali	Manivali	768 Part	N 19.197381°	E 73.412478°
		2.00	0.5	1.00	Thane	Thane	Murbad East	Manivali	Sasane	768 Part	N 19.206283°	E 73.409052°
		2.00	0.5	1.00	Thane	Thane	Murbad East	Manivali	Bhuvan	769 Part	N 19.232892°	E 73.442862°
		2.00	0.5	1.00	Thane	Thane	Murbad West	Mohaghar	Aagashi	757	N-19° 8'7.35	E-73°27'16.32
		2.00	0.5	1.00	Thane	Thane	Murbad West	Mohaghar	Mhasa	759	N-19° 9'18.88	E-73°25'58.38
		2.00	0.5	1.00	Thane	Thane	Murbad West	Mohaghar	Mohaghar	761	N-19° 9'22.83	E-73°24'19.39
		2.00	0.5	1.00	Thane	Thane	Tokavade S	Moroshi	Moroshi	724	N -19°19444	E- 73°42101
		2.00	0.5	1.00	Thane	Thane	Tokavade S	Moroshi	Thitabi	720	N -19°21201	E- 73°46525
		2.00	0.5	1.00	Thane	Thane	Tokavade S	Moroshi	Savarne	722	N -19°20090	E- 73°45046
		2.00	0.5	1.00	Thane	Thane	Tokavade N	Talegaon	shiroshi	700 p	19°25'29.52"N.	73°39'35.64"E
		2.00	0.5	1.00	Thane	Thane	Tokavade N	Talegaon	Talegaon North	700	19°25'29.41"N.	73°38'39.37"E
		2.00	0.5	1.00	Thane	Thane	Tokavade N	Talegaon	Talegaon South	703	19°24'39.69"N.	73°40'22.48"E
		2.00	0.5	1.00	Thane	Thane	Padgha	Dhighashi	Kandali	1015	19°28'56.31"N	73°10'5.46"E
		2.00	0.5	1.00	Thane	Thane	Padgha	Dhighashi	Dhighashi	1013	19°28'39.16"N	73° 6'57.96"E
		2.00	0.5	1.00	Thane	Thane	Padgha	Dhighashi	Shedgaon	1014	19°28'1.39"N	73° 7'37.56"E
		2.00	0.5	1.00	Thane	Thane	Padgha	Dhighashi	Kandali	1015	19°28'56.38"N	73°10'5.45"E
		2.00	0.5	1.00	Thane	Thane	Bhiwandi	Palivali	Parivali	1044	N 19 21' 43.54"	E 73 3' 0.67"
		2.00	0.5	1.00	Thane	Thane	Bhiwandi	Kuhe	Kuhe	1105	N 19 23' 14.35"	E 72 58' 0.25"
		2.00	0.5	1.00	Thane	Thane	Bhiwandi	Kuhe	Tepacha pada	1124	N 19 21' 10.97"	E 72 59' 5.32"
		50.00		**25.00**								

	Works proposed				Location of work						Latlong	
	Item of work	**Quantity**	**Rate**	**Amount (Rs. in Lakhs**	**Circle**	**Division**	**Range**	**Round**	**Beat**	**Compartment No**	Latitude	Longitude
1	**2**	**3**	**4**	**5**	**6**	**7**	**8**	**9**	**10**	**11**	**12**	**13**
iii	Cement Nalla Bandh	1.00	15.00	15.00	Thane	Thane	Badlapur	Ambernath	Shirgaon	821 pt	N 19.225689	E 73.175588
		1.00	15.00	15.00	Thane	Thane	Badlapur	Ambernath	Shirgaon	822 pt	N 19.095931	E 73.175591
		1.00	15.00	15.00	Thane	Thane	Badlapur	Ambernath	Kohoj	823 pt	N 19.120184	E 73.175587
		1.00	15.00	15.00	Thane	Thane	Badlapur	Ambernath	Kohoj	824 pt	N 19.225689	E 73.175588
		1.00	15.00	15.00	Thane	Thane	Badlapur	Ambernath	Dapivali	825 pt	N 19.123167	E 73.175594
		1.00	15.00	15.00	Thane	Thane	Padgha	Dhighashi	Kandali	1015	19°28'56.31"N	73°10'5.46"E
		1.00	15.00	15.00	Thane	Thane	Padgha	Dhighashi	Dhighashi	1013	19°28'39.16"N	73° 6'57.96"E
		1.00	15.00	15.00	Thane	Thane	Padgha	Dhighashi	Shedgaon	1014	19°28'1.39"N	73° 7'37.56"E
		1.00	15.00	15.00	Thane	Thane	Padgha	Dhighashi	Kandali	1015	19°28'56.38"N	73°10'5.45"E
		1.00	15.00	15.00	Thane	Thane	Padgha	Dhighashi	Sahagaon	1016	19°29'56.66"N	73°10'18.69"E
		10.00		**150.00**								
		1.00	15	15.00	Thane	Alibag	Khalapur	Shiravali	Vavaoshi	Talashi Com No.495	N 18.769445	E 73.204469
		1.00	15	15.00	Thane	Alibag	Khalapur	Khopoli	Khopoli South	Khopoli South Com no.458	N 18.767489	E 73.355948
		1.00	15	15.00	Thane	Alibag	Khalapur	Khopoli	Khopoli North	Khopoli North Com no.796	N 18.763481	E 73.354871
		1.00	15	15.00	Thane	Alibag	Khalapur	Khalapur	Beed Khurd	Beed Khurd Com no.514	N 18.84907	E 73.34056
		1.00	15	15.00	Thane	Alibag	Khalapur	Khalapur	Jambrung	JamrungCom no.513	N 18.82197	E 73.35428
		1.00	15	15.00	Thane	Alibag	Khalapur	Shiravali	Horale	Zadani Com no.498	N 18.794819	E 73.243083
		1.00	15	15.00	Thane	Alibag	Khalapur	Chilthan	Khanav	KhanavCom no.472	N 18.43328	E 73.16331
		1.00	15	15.00	Thane	Alibag	Khalapur	Chilthan	Khanav	Khadaivadi Com no.471	N 18.4319	E 73.1614
		1.00	15	15.00	Thane	Alibag	Khalapur	Umbra	Tuksai	Tuksai Sur no.61	N 18.691974	E 73.302207
		1.00	15	15.00	Thane	Alibag	Khalapur	Umbra	Chavani South	Chavani South Com no.465	N 18.712686	E 73.325633
		1.00	15	15.00	Thane	Alibag	Wadkhal	Gadab	Gadab	Gadab Com. 431	N 18.68.85.84	E 73.05.61.12
		1.00	15	15.00	Thane	Alibag	Wadkhal	Kurnad	Tilore	Tilore Com 435	N 18.39.58.7	E 073.116.90
		1.00	15	15.00	Thane	Alibag	Wadkhal	Nigada	Kondhavi (S)	Kondhavi (S) Com425	N 18.61.70.43	E 073.15.74.5
		13.00		**195.00**								

	Works proposed				Location of work						Latlong	
	Item of work	**Quantity**	**Rate**	**Amount (Rs. in Lakhs**	**Circle**	**Division**	**Range**	**Round**	**Beat**	**Compartment No**	Latitude	Longitude
1	**2**	**3**	**4**	**5**	**6**	**7**	**8**	**9**	**10**	**11**	**12**	**13**
iv	Creation of Forest ponds/Vantale/Khodtadi	1.00	3	3.00	Thane	Alibag	Wadkhal	Nigada	Nigada	Nigada com.418	N 18.63.39.31	E 073.09.92.73
		1.00	3	3.00	Thane	Alibag	Wadkhal	Nigada	Kondhavi (S)	Kondhavi (S) Com425	N 18.61.57.58	E 073.16.10.15
		1.00	3	3.00	Thane	Alibag	Wadkhal	Gadab	Pale	Pale Com. 428	N 18.65.402	E 073.08.310
		1.00	3	3.00	Thane	Alibag	Wadkhal	Gadab	Gadab	Gadab Sr. No 43	N 18.71.40.74	E 073.05.21.49
		1.00	3	3.00	Thane	Alibag	Karjat East	Dhak	Gaurkamat	Jambhivali S.N. 22	N 18.926181	E 73.385573
		1.00	3	3.00	Thane	Alibag	Karjat East	Dhamani	Jambrung	Jamrung ComNo.118/2/B	N 18.993396	E 73.508794
		1.00	3	3.00	Thane	Alibag	Karjat East	Khandpe	Chochi	Com.No.40	N 18.849898	E 73.36612
		1.00	3	3.00	Thane	Alibag	Karjat East	Khandpe	Khandape	Aadivali S N 8	N 18.878607	E 73.351335
		1.00	3	3.00	Thane	Alibag	Karjat East	Khandpe	Salpe	Salpe C N 36	N 18.859364	E 73.387028
		1.00	3	3.00	Thane	Alibag	Karjat East	Khandpe	Salpe	Salpe C N 36	N 18.859727	E 73.389071
		1.00	3	3.00	Thane	Alibag	Karjat East	Dhamani	Ambivali	Amibivali Com.NO 67	N 19.00705	E 73.51359
		11.00		**33.00**								
v	Deep CCT	1.00	10.00	10.00	Thane	Thane	Murbad East	Murbad	Manivali	768 Part	N 19.197381°	E 73.412478°
		1.00	10.00	10.00	Thane	Thane	Murbad West	Mohaghar	Aagashi	757	N-19° 8'7.35	E-73°27'16.32
		1.00	10.00	10.00	Thane	Thane	Kalyan	Dahagaon	Poi	826	N 19.130400	E 73.180700
		1.00	10.00	10.00	Thane	Thane	Badlapur	Ambernath	Shirgaon	821 pt	N 19.225689	E 73.175588
		4.00		**40.00**								
5(2)(g)	**Total SMC**	**88.00**		**443.00**								

	Works proposed				Location of work						Latlong	
	Item of work	**Quantity**	**Rate**	**Amount (Rs. in Lakhs**	**Circle**	**Division**	**Range**	**Round**	**Beat**	**Compartment No**	Latitude	Longitude
1	**2**	**3**	**4**	**5**	**6**	**7**	**8**	**9**	**10**	**11**	**12**	**13**
	Wildlife Management & Man-animal conflict mitigation											
5(2)(i)	**Improvement of wildlife habitat as provided in the approved wildlife management plan or working plan**											
iii	Creation & maintenance of water sources/water holes for wildlife	10.00	100000	10.00	Thane	Thane	Kalyan	Dahagaon	Bapsai	830	N 19.144500	E73.152000
		10.00	100000	10.00	Thane	Thane	Badlapur	Ambernath	Shirgaon	821 pt	N 19.225689	E 73.175588
		10.00	100000	10.00	Thane	Thane	Murbad East	Murbad	Bhuvan	769 Part	N 19.232892°	E 73.442862°
		10.00	100000	10.00	Thane	Thane	Murbad West	Mohaghar	Mohaghar	762pt	N-19° 9'46.45	E-73°23'36.30
		10.00	100000	10.00	Thane	Thane	Tokavade S	Moroshi	Moroshi	724	N -19°19444	E- 73°42101
		10.00	100000	10.00	Thane	Thane	Tokavade N	Talegaon	shiroshi	700 p	19°25'29.52"N	73°39'35.64"E
		10.00	100000	10.00	Thane	Thane	Padgha	Dhighashi	Kandali	1015	19°28'56.31"N	73°10'5.46"E
		10.00	100000	10.00	Thane	Thane	Bhiwandi	Palivali	Palivali	1044	N 19 21' 43.54"	E 73 3' 0.67"
		80.00		**80.00**		Thane						
5(2)(i)	**Total**	**80.00**	**0**	**80.00**								
5(2)(k)	Establishment, operation and maintenance of animal transit treatment centre and veterinary treatment facilities for wild animals											
i	Establishment, operation and maintenance of animal rescue centre/ Transit treatment Centre			15.00	Thane	Thane	Thane	Kalva	Shil	78 rakhiv	N19°8.398	E 73°02.928
ii	Veterinary treatment facilities for wild animals			5.00	Thane	Thane	Thane	Kalva	Shil	78 rakhiv	N19°8.398	E 73°02.928
iii	Animal seizing & capturing devices			50.00	Thane	Thane	Thane	Kalva	Shil	78 rakhiv	N19°8.398	E 73°02.928
iv	Rescue emergency operations			21.00	Thane	Thane	Thane	Kalva	Shil	78 rakhiv	N19°8.398	E 73°02.928
Total 5(2) k				**91.00**								
5(2)(m)	**Management of biological diversity and biological resource**											
iii	Conservation of Wildlife like GIB, Wild buffalo, Turtle, Vultures, Owl, Sparrow, etc.	1.00	7.00	7.00	Thane	Roha	Mhasala	Mhasala	Sarver	Chirgaon 771	N180754	E0730734
	5(2)(m)	**1.00**		**7.00**								
	Grand Total for activities not less than 80% of component	**9830.89**		**1827.43**								

	Works proposed				Location of work						Latlong	
	Item of work	**Quantity**	**Rate**	**Amount (Rs. in Lakhs**	**Circle**	**Division**	**Range**	**Round**	**Beat**	**Compartment No**	Latitude	Longitude
1	**2**	**3**	**4**	**5**	**6**	**7**	**8**	**9**	**10**	**11**	**12**	**13**
5 (3)	**Works under not more than 20 % component (Rule 5 (3))**											
5(3) d	**Construction, up-gradation and maintenance of inspection paths, forest roads in forest area, fire lines, watch towers, check posts and timber depots**											
ii	**Construcion of Road**											
	Construction of Cement Concrete road at Forest Land Sajgaon Khalapur	1.00	74	74.00	Thane	Alibag	Khalapur	Khalapur	Khalapur	Takai Sur No.22	N 18 47 55.46 N 18 47 52 .55 N 18 47 50 .94	E 073 18 36.54 E 073 18 37.42 E 073 18 35.22
	Construction of concrete road at Takai Forest Range Depo Sajgao Tal Khalapur	1.00	3	3.00	Thane	Alibag	Khalapur	Khalapur	Khalapur	Anjoshi Sur No.21, Takai Sur No.31	N 18 27 57.17 N 18 48 01.83	E 073 18 38.56 E 073 18 35.33
		2.00		**77.00**								
i	Watch Tower	1.00	10.00	10.00	Thane	Thane	Padgha	Dhighashi	Kandali	1015	19°28'56.31"N	73°10'5.46"E
		1.00	10.00	10.00	Thane	Thane	Thane	Kalva	shil	194	N19°14 98 31	E 73°04 25 89
	Total	**2.00**		**20.00**								
	Watch Towers	1.00	10	10.00	Thane	Alibag	Karjat East	Khandpe	Khandpe	C.N 32	N 18.84.84	E 73.36.83
		1.00	10	10.00	Thane	Alibag	Khalapur	Khalapur	Mandap	C.N 518	N 18.81746	E 73.23161
		2.00		**20.00**								
	Total Watch Tower	**4.00**	**0.00**	**40.00**								
	Total 5 (3) d	**6.00**		**117.00**								
5(3)(e)	**Construction of residential and official building in forest for frony line staff deployed for protection of forest and wildlife**											
i	Construction of Forest Guard Quarter	1.00	22.00	22.00	Thane	Thane	Badlapur	Ambernath	chikhloli,	823	N 19.120184	E 73.175587
		1.00	22.00	22.00	Thane	Thane	Kalyan	Kalyan,	Kalyan,	Maharal 45/a,	19°14'4406"N.	73°10'0979"E
		2.00		44								
		1.00	22	22.00	Thane	Alibag	Sudhagad	Majare	Pali	649	N1854693	E73222397
		1.00	22	22.00	Thane	Alibag	Khalapur	Khopoli	Khopoli U	S.No. 1	N 18.787878	E 73.356214
		2.00		**44.00**								
	Quarter Type I	**4.00**		**88.00**								

	Works proposed				Location of work						Latlong	
	Item of work	**Quantity**	**Rate**	**Amount (Rs. in Lakhs**	**Circle**	**Division**	**Range**	**Round**	**Beat**	**Compartment No**	Latitude	Longitude
1	**2**	**3**	**4**	**5**	**6**	**7**	**8**	**9**	**10**	**11**	**12**	**13**
	Forester and Forest Quarter Dhamne Type II	1.00	26.00	26.00	Thane	Thane	Bhiwandi	Kuhe	Palivali	S No 100	N 19 21 33.282	E 72 59 15.6732
		1.00	26.00	26.00	THANE	Jawhar	kanchad	poseri	poseri	G.n 155	N19.40.336	E.73.03.694
		1.00	26.00	26.00	Thane	Alibag	Alibag	Nagaon	Wave	S.No. 29	N 183436	E 725829
	Quarter Type II	**3.00**		**78.00**								
iii	Constrution of Type III	1.00	36.00	36.00	Thane	Thane	Badlapur	Badlapur	Badlapur	92	N19.16686	E73.24227
		1.00	36	36.00	Thane	Alibag	Karjat W	Karjat	Karjat	S.No. 16B	N18.90782	E73.319348
		1.00	36	36.00	THANE	Jawhar	kanchad	poseri	poseri	G.n 156	N19.40.336	E.73.03.694
		1.00	36	36.00	Thane	Roha	Mhasala	Mhasala	Mhasala	No	N180355.88	E0732502.7
	Quarter Type III	4.00		144.00								
vi	Constrution of Range office Building	1.00	45	45.00	Thane	Thane	Badlapur	Badlapur	Badlapur	92	N19.16686	E73.24227
		1.00	45	45.00	THANE	Jawhar	kanchad	poseri	poseri	G.n 157	N19.40.336	E.73.03.694
		1.00	45	45.00	Thane	Alibag	Panvel	Panvel	Panvel	Takka Gaonthan	$N18^{0}981452$	E7309383
		1.00	45	45.00	Thane	Roha	Mangaon	Mangaon	Mangaon	S.No.135	N181458.9	E0701714.3
	RANGE OFFICE	**4.00**		**180.00**								
v	Amenities for Woman Front line staff	1.00	14.00	14.00	Thane	Alibag	Karjat East	-	-	Sur. No.14/2/b	E 18 90 81 27	N 73 31 89 95
		1.00		**14.00**								
	Grand Total New building 5(3)(e)	**16.00**		**504.00**								
5(3)(i)	Publicity-cum-awareness programme and exhibition on the various schemes being implemented by the State Authority from State Fund (including Nature Awareness Program conduct by METDB)	LS		2.00	Thane	Thane						
		LS		2.00	Thane	Dahanu						
		LS		2.00	Thane	Shahapur						
		LS		2.00	Thane	Jawhar						
		LS		2.00	Thane	Alibag						
		LS		2.00	Thane	Roha						
				12.00								
	Total for works under not more thane 20% Components			**633.00**								
	Thane Circle Grand Total NPV			**2460.43**								

ANNUAL PLAN OF OPERATIONS 2022-23												
FORMAT VII A---- Forestry and other activities proposed under Net Present Value amount (Please see Rule no. 5(2), 5(3), and proviso under Rule 5(3) (NPV - 04)												
Yavatmal Territorial Circle												
Works proposed					Location of work						Latlong	
Rule No.	Item of work	Quantity	Rate	Amount (Rs. in Lakhs	Circle	Division	Range	Round	Beat	Compartment No	Longitude	Latitude
1	2	3	4	5	6	7	8	9	10	11	12	13
5 (2)	Works under Not less than 80 % component (Rule 5 (2))											
5(2)(a)	Assisted Natural Regeneration (PPO Works)	10	1.69	16.90	Yavatmal	Yavatmal	South Arni	Anjnkhed	Anjnkhed	49	N 19°56'.46"	E 77°59'25"
		10	1.69	16.90	Yavatmal	Yavatmal	South Arni	Anjnkhed	Ranidhanora	48	N 19°92'.30"	E 77°99'35"
		10	1.69	16.90	Yavatmal	Yavatmal	Wadgaon D	Yelabara	Ghodkindi	309	N 20°17'.18"	E 78°10'05"
		50	1.69	84.50	Yavatmal	Yavatmal	Wadgaon D	Wadgaon D	rawakadi	331	N 20°26'.27"	E 78°26'27"
		30	1.69	50.70	Yavatmal	Yavatmal	Wadgaon D	Wadgaon D	saykheda	332	N 20°15'.11"	E 78°16'47"
		50	1.69	84.50	Yavatmal	Yavatmal	Wadgaon D	Wadgaon D	chichghat	329	N 20°16'.36"	E 78°14'34"
	Assisted Natural Regeneration (PPO Works)	10	1.69	16.90	Yavatmal	Yavatmal	South Arni	Belora	Belora	21	N 19°59'.29"	E 78°03'23"
		10	1.69	16.90	Yavatmal	Yavatmal	South Arni	Anjnkhed	Ranidhanora	55	N 19°92'.31"	E 77°98'06"
	Total 5(2)(a)	**180.00**		**304.20**								
	NPV 5(2)(b) Artifical Regeneration											
5(2) (b)	(ii)Artificial Regeneration 4th Year Operation	12.00	0.18	2.16	Yavatmal	Yavatmal	Hiwari	Nakapardi	Ghatana	279	N 20°14'56.46"	E 78°5'58.9"
		10.00	0.18	1.80	Yavatmal	Yavatmal	Hiwari	Hiwari	Bham	284	N 20°11'36.03"	E 78°1'9.23"
		20.00	0.18	3.60	Yavatmal	Yavatmal	Jodmoja	Kalam	Mendhala	359	N 20°27'46.00"	E 78°15'48.00"
		20.00	0.18	3.60	Yavatmal	Yavatmal	Jodmoja	Kalam	Mohadari	92	N 20°24'28.00"	E 78°13'51.00"
		25.00	0.18	4.50	Yavatmal	Yavatmal	North Arni	Chadni	Sheklgaon	257	N 20°14'37.32"	E 78°02'75.75"
		15.00	0.18	2.70	Yavatmal	Yavatmal	South Arni	Anjnkhed	Anjnkhed	49	N 19°56'46.56"	E 77°59'46.99"
		30.00	0.18	5.40	Yavatmal	Yavatmal	Darwha	Karjgaon	Dhamngaon	155	N 20°32'54.47"	E 77°59'23.95"
		132.00		**23.76**								
	(ii) Artificial Regeneration 4th Year Operation	30.00	0.18	5.40	Yavatmal	PKD	Mukutban	Mukutban	Hirapur	C-25	N 19.76737	E 78.89215
		25.00	0.18	4.50	Yavatmal	PKD	Maregaon	Khandani	Ambezari	C-69	N 20.01788	E 78.76324
		25.00	0.18	4.50	Yavatmal	PKD	Maregaon	Ralegaon	Varna	803	N 20.31725	E 78.54836
		20.00	0.18	3.60	Yavatmal	PKD	Jamani	Shibala	Ambezari	66	N 19.86933	E 78.64541
		10.00	0.18	1.80	Yavatmal	PKD	Jamani	Matharjun	Mandavi	64	N 19.95125	E 78.59987
		25.00	0.18	4.50	Yavatmal	PKD	Ghatanji	Koli	Koli	243	N 20.04336	E 78.20066
		25.00	0.18	4.50	Yavatmal	PKD	Ghatanji	Koli	Koli	243	N 20.04271	E 78.19327
		25.00	0.18	4.50	Yavatmal	PKD	Parwa	Patapangara	Patapangara	177	N 19.99054	E 78.22904
		17.00	0.18	3.06	Yavatmal	PKD	Pandharkawada	Pandharkawada	Pahapal	648	N 20.02723	E 78.42867
		13.00	0.18	2.34	Yavatmal	PKD	Pandharkawada	Pandharkawada	Kondi	68	N 20.16458	E 78.59156
		215.00	-	**38.70**								

Works proposed					Location of work						Latlong	
Rule No.	Item of work	Quantity	Rate	Amount (Rs. in Lakhs	Circle	Division	Range	Round	Beat	Compartment No	Longitude	Latitude
1	2	3	4	5	6	7	8	9	10	11	12	13
	(ii)Artificial Regeneration 4th Year Operation	25.00	0.18	4.50	Yavatmal	Pusad	Digras	Singed	Rui	343	N-20.02.49	E-77.39.76
		25.00	0.18	4.50	Yavatmal	Pusad	Digras	Digras	Mandaw	773	N-20.14.56	E-77.69.09
		15.00	0.18	2.70	Yavatmal	Pusad	Digras	Digras	Gandhinagar	771	N-20.18.52	E-77.69.14
		30.00	0.18	5.40	Yavatmal	Pusad	Pusad	Pusad	Arygaon	349	N-19.95.21	E-77.61.71
		21.95	0.18	3.95	Yavatmal	Pusad	Umarkhed	Umarkhed	Adad	751	N-19.44.44	E-77.30.46
		13.60	0.18	2.45	Yavatmal	Pusad	Umarkhed	Krishnapur	Pardi	455	N-19.38.01	E-77.46.12
		22.60	0.18	4.07	Yavatmal	Pusad	Shambilpampri	Shembalpimpri	Deothana	412	N-19.82.00	E-77.43.01
		24.33	0.18	4.38	Yavatmal	Pusad	Mahagaon	Mahagaon	Senad	425	N-19.44.47	E-77.40.79
		25.00	0.18	4.50	Yavatmal	Pusad	Kali	Kali	Kasola	812	N-19.53.56	E-77.39.78
		30.00	0.18	5.40	Yavatmal	Pusad	Marwadi	Marwadi	Lakhi	147	N-19.94.79	E-77.62.98
		20.00	0.18	3.60	Yavatmal	Pusad	Marwadi	Marwadi	Lakhi	318	N19.56.03	E-77.24.22
		252.48	**-**	**45.45**								
	(ii)Artificial Regeneration 4th Year Operation	20.00	0.18	3.60	Yavatmal	Washim	Washim	Risod	Jawa;a / Mohaja-2	92	N-19.915986	E-76.698892
		25.00	0.18	4.50	Yavatmal	Washim	Malegaon	Mungla	Mungla	104	N-20.1695	E-76.53708
		22.00	0.18	3.96	Yavatmal	Washim	Manora	Poharadevi	Poharadevi /Kakadchikhali	437	N-20º 05' 47.16"	E-77º 37' 59.94"
		20.00	0.18	3.60	Yavatmal	Washim	Malegaon	Medshi	Gondhal wadi (Medshi)	78	N20.37.4919	E76.99.1988
		87.00	-	**15.66**								
	Total 5(2)(b)	**686.48**		**123.57**								
5(2)(c)	**Silvicultural operations in forests**											
i	Fodder Development (PPO Works)	15	2.28	34.30	Yavatmal	Yavatmal	N. Arni	Borgaon	Tendoli	266	N 20°53'2.00"	E 78°08'00.00"
		15	2.28	34.30	Yavatmal	Yavatmal	N. Arni	Borgaon	Borgaon	263	N 20°08'20.98"	E 77°97'33.30"
		10	2.28	22.80	Yavatmal	Yavatmal	Ner	Ner	Kolora	383	N-20.28.30	E-77.52.56
		10	2.28	22.80	Yavatmal	Yavatmal	Ner	Mozar	Mozar	198	N-20.30.21	E-77.45.60
		10	2.28	22.80	Yavatmal	Yavatmal	Ner	Ner	Ner	382	N-20.49.88	E-77.83.69
		10	2.28	22.80	Yavatmal	Yavatmal	Darwha	Karajgaon	Dhamngaon	62	N-20.20.24	E-77.36.50
		10	2.28	22.80	Yavatmal	Yavatmal	Darwha	Darwha	N Darwha	65	N-20.20.12	E-77.46.06
		20	2.28	45.60	Yavatmal	Yavatmal	Jodmoha	Jodmoha	Vitthalwadi	327	N-20.30.14	E-78.30.37
		10	2.28	22.80	Yavatmal	Yavatmal	Jodmoha	Jodmoha	Sonkhas Hetti	326	N-20.28.48	E-78.33.75
		110.00		**251.00**								

Works proposed					Location of work						Latlong	
Rule No.	**Item of work**	**Quantity**	**Rate**	**Amount (Rs. in Lakhs**	**Circle**	**Division**	**Range**	**Round**	**Beat**	**Compartment No**	**Longitude**	**Latitude**
1	**2**	**3**	**4**	**5**	**6**	**7**	**8**	**9**	**10**	**11**	**12**	**13**
i	Fodder Development PPO Work including Chenlink fencing and nursary Work	10.00	2.28	23.00	Yavatmal	PKD	Ghatanji	Koli	Rampur	250	N 20.104583	E 78.267128
		10.00	2.28	23.00	Yavatmal	PKD	Ghatanji	Koli	Rampur	251	N 20.108309	E 78.176657
		20.00	**-**	**46.00**								
i	Fodder Development (PPO Works + Nursary Works)	10.00	2.28	22.80	Yavatmal	Washim	Malegaom	Amana	Amana-3	C-181	N-20.17.33.38	E-77.06.08.24
		10.00	2.28	22.80	Yavatmal	Washim	Malegaom	Amana	Amana-3	C-181	N-20.17.33.38	E-77.06.08.24
		5.00	2.28	11.40	Yavatmal	Washim	Malegaom	Amana	Amana-3	C-181	N-20.17.33.38	E-77.06.08.24
		10.00	2.28	22.80	Yavatmal	Washim	Karanja	Karanja	Zodga	423	N-20.31.39	E-77.30.9
		10.00	2.28	22.80	Yavatmal	Washim	Karanja	Karanja	Zodga	423	N-20.31.39	E-77.30.9
		5.00	2.28	11.40	Yavatmal	Washim	Karanja	Karanja	Zodga	423	N-20.31.39	E-77.30.9
		10.00	2.28	22.80	Yavatmal	Washim	Manora	Manora	Sawargaon	429	N20.26.81.72	E77.60.64.28
		15.00	2.28	34.20	Yavatmal	Washim	Manora	Manora	Sawargaon	138	N20.18.65.67	E77.39.34.53
		75.00		**171.00**								
	Total PPO	**205.00**		**468.00**								
ii	Fodder Development (FYO Works)	20.00	1.08	21.60	Yavatmal	Yavatmal	Ner	Ner	Raipur	382	N 20°30'17.85"	E 77°50'11.62"
		20.00	1.08	21.60	Yavatmal	Yavatmal	Ner	Ner	Nawabpur	383	N 20°28'16.8"	E 77°52'48.51"
		20.00	1.08	21.60	Yavatmal	Yavatmal	Ner	Mozar	Mozar	198	N 20°30'14.52"	E 77°46'14.85"
		10.00	1.08	10.80	Yavatmal	Yavatmal	Darwha	Darwha	Mahurli	64	N 20°19'27.00"	E 77°42'54.00"
		10.00	1.08	10.80	Yavatmal	Yavatmal	Darwha	Darwha	Devgari	70	N 20°19'34.00"	E 77°47'25.00"
		10.00	1.08	10.80	Yavatmal	Yavatmal	Darwha	Darwha	Khopadi	67	N 20°16'09.00"	E 77°44'33.00"
		19.00	1.08	20.60	Yavatmal	Yavatmal	Darwha	Karajgaon	Dhamangaon	62	N 20°20'32.00"	E 77°36'33.00"
		20.00	1.08	21.60	Yavatmal	Yavatmal	Darwha	Pathrod	Ladkhed	71	N 20°32'84.00"	E 77°89'74.00"
		20.00	1.08	21.60	Yavatmal	Yavatmal	Darwha	Lohi	Hatola	448	N 20°26'04.00"	E 77°36'38.00"
		10.00	1.08	10.80	Yavatmal	Yavatmal	Jodmoha	Kalam	Belona	353	N 20°25'20.00"	E 78°14'51.00"
		20.00	1.08	21.60	Yavatmal	Yavatmal	Jodmoha	Kalam	Ghoti	354	N 20°25'19.00"	E 78°14'52.00"
		30.00	1.08	32.40	Yavatmal	Yavatmal	Jodmoha	Jodmoha	Vitthalwadi	327	N 20°30'12.78"	E 78°30'42.22"
		20.00	1.08	21.60	Yavatmal	Yavatmal	Jodmoha	Jodmoha	Sonkhas	326	N 20°17'14.13"	E 78°19'15.18"
		10.00	1.08	10.80	Yavatmal	Yavatmal	N. Arni	Borgaon	Tendoli	266	N 20°53'2.00"	E 78°08'00.00"
		10.00	1.08	10.80	Yavatmal	Yavatmal	Yavatmal	Waghapur	Jabhulni	415	N 20°25'80.2"	E 78°00'10.2"
	Total FYO	**249.00**		**269.00**								

Works proposed					Location of work						Latlong	
Rule No.	Item of work	Quantity	Rate	Amount (Rs. in Lakhs	Circle	Division	Range	Round	Beat	Compartment No	Longitude	Latitude
1	2	3	4	5	6	7	8	9	10	11	12	13
iii	Fodder Development (SYO Works)	20.00	0.73	14.60	Yavatmal	Yavatmal	Darwha	Darwha	Ghatkinhi	65	N 20°20'30.63"	E 77°46'5.97"
		20.00	0.73	14.60	Yavatmal	Yavatmal	Darwha	Darwha	S.Darwha	70	N 20°19'29.64"	E 77°47'20.45"
		10.00	0.73	7.35	Yavatmal	Yavatmal	Darwha	Darwha	Ghatkinhi	64	N 20°19'35.45"	E 77°42'52.47"
		10.00	0.73	7.35	Yavatmal	Yavatmal	Darwha	Darwha	Khopadli	67	N 20°16'8.56"	E 77°44'19.55"
		10.00	0.73	7.35	Yavatmal	Yavatmal	Darwha	Pathrad	Ladkhed	71	N 20°19'46.08"	E 77°53'53.77"
		20.00	0.73	14.60	Yavatmal	Yavatmal	Darwha	Karajgaon	Dhamangona	62	N 20°20'33.64"	E 77°36'39.98"
		10.00	0.73	7.35	Yavatmal	Yavatmal	Darwha	Lohi	Lohi	187	N 20°25'36.1"	E 77°36'46.88"
		20.00	0.73	14.60	Yavatmal	Yavatmal	Darwha	Lohi	Lohi	448	N 20°26'11.96"	E 77°36'48.34"
		29.00	0.73	21.20	Yavatmal	Yavatmal	Ner	Ner	Ner	381	N 20°31'27.13"	E 77°50'46.91"
		20.00	0.73	14.60	Yavatmal	Yavatmal	Ner	Mozar	Ajanti	384	N 20°28'3.98"	E 77°52'46.34"
		20.00	0.73	14.60	Yavatmal	Yavatmal	Ner	Ner	Raipur	382	N 20°29'56.77"	E 77°50'14.08"
		20.00	0.73	14.60	Yavatmal	Yavatmal	Ner	Ner	Kolura	383	N 20°28'16.8"	E 77°52'48.51"
		20.00	0.73	14.60	Yavatmal	Yavatmal	Ner	Mozar	Mozar	198	N 20°30'14.52"	E 77°46'14.85"
		10.00	0.73	7.35	Yavatmal	Yavatmal	Jodmoha	Kalamb	Kalamb	353	N 20°25'20.00"	E 78°14'51.00"
		10.00	0.73	7.35	Yavatmal	Yavatmal	Jodmoha	Jodmoha	Sonkhas-heta	325	N 20°15'59.82"	E 78°20'11.28"
		10.00	0.73	7.35	Yavatmal	Yavatmal	Jodmoha	Jodmoha	Sonkhas-heta	326	N 20°17'14.13"	E 78°19'15.18"
		20.00	0.73	14.60	Yavatmal	Yavatmal	Jodmoha	Jodmoha	Sonkhas-heta	327	N 20°17'14.13"	E 78°19'15.18"
		10.00	0.73	7.35	Yavatmal	Yavatmal	North Arni	Borgaon	Borgaon	263	N 20°08'20.98"	E 77°97'33.30"
		10.00	0.73	7.35	Yavatmal	Yavatmal	North Arni	Borgaon	Tendoli	266	N 20°53'2.00"	E 78°08'00.00"
		10.00	0.73	7.35	Yavatmal	Yavatmal	North Arni	Borgaon	Borgaon	263	N 20°08'48.99"	E 77°95'54.83"
		309.00		**226.10**								
		10.00	0.73	7.30	Yavatmal	PKD	Parwa	Patapangra	Zatala	176	N 20.025811	E 78.560109
		10.00	0.73	7.30	Yavatmal	PKD	Parwa	Patapangra	Patapangra 2	178	N 19.976742	E 78.207817
		10.00	0.73	7.30	Yavatmal	PKD	Ghatanji	Sakhara	Sakhara	226	N 20 05 30.02	E 78 20 05.11
		10.00	0.73	7.30	Yavatmal	PKD	Ghatanji	Koli B	Kapasi	220	N 20 03 08.0	E 78 09 38.3

Works proposed					Location of work						Latlong	
Rule No.	Item of work	Quantity	Rate	Amount (Rs. in Lakhs	Circle	Division	Range	Round	Beat	Compartment No	Longitude	Latitude
1	2	3	4	5	6	7	8	9	10	11	12	13
iii	Fodder Development (SYO Works)	10.00	0.73	7.30	Yavatmal	PKD	Pandharkawada	Pandharkawada	Tiwsala	73	N 20.124554	E 78.641824
		10.00	0.73	7.30	Yavatmal	PKD	Pandharkawada	Umari	Ghodara	80	N 20.134424	E 78.527584
		10.00	0.73	7.30	Yavatmal	PKD	Pandharkawada	Umari	Runza	C 81	N 20.120798	E 78.50596
		10.00	0.73	7.30	Yavatmal	PKD	Mukutban	Mukutban	Bhendala	C 32A	N 19 49.787	E 78 49.285
		10.00	0.73	7.30	Yavatmal	PKD	Mukutban	Mukutban	Bhendala	C 32A	N 19 49.476	E 78 49.347
		10.00	0.73	7.30	Yavatmal	PKD	Mukutban	Pawanar	Pawanar	21	N 19 51.420	E 78 48.197
		10.00	0.73	7.30	Yavatmal	PKD	Jamni	Matharjun	Mandavi	60	N 19.901	E 78.58758
		10.00	0.73	7.30	Yavatmal	PKD	Jamni	Jamni	Patan	50	N 19.83502	E 78.70655
		10.00	0.73	7.30	Yavatmal	PKD	Maregaon	Khandani	Wadhona	35	N 19 59.39	E 78 43.650
		10.00	0.73	7.30	Yavatmal	PKD	Maregaon	Botoni	Botoni	C 65	N 20.12078	E 78.697092
		5.00	0.73	3.65	Yavatmal	PKD	Maregaon	Wadaki	Wadaki	655	N 20 17 13	E 78 33 24
		10.00	0.73	7.30	Yavatmal	PKD	Wani	Sukanegaon	Sukanegaon	7	N 19.944393	E 78.93179
		10.00	0.73	7.30	Yavatmal	PKD	Wani	Wani	Wani	C 7 F	N 20 08 054	E 78 54 951
		7.00	0.73	5.11	Yavatmal	PKD	Wani	Wani	Shirpur	C 39 A	N 19 58 60	E 78 59 56
		8.00	0.73	5.84	Yavatmal	PKD	Wani	Sukanegaon	Borda	C 49	N 19.990964	E 78.823034
		5.00	0.73	3.65	Yavatmal	PKD	Wani	Kurli	Kurli	C 15 C	N 19 53 214	E 79 03 001
		185.00		**135.05**								
		10.00	0.73	7.30	Yavatmal	Pusad	Pusad	Pusad	Belgvhan	356	N-20.02.20	E-77.37.12
		20.00	0.73	14.60	Yavatmal	Pusad	Pusad	Pusad	Belgvhan	356	N-20.02.20	E-77.37.12
		10.00	0.73	7.30	Yavatmal	Pusad	Pusad	Pusad	Katkheda	825	N-19.56.58	E-77.37.98
		15.00	0.73	10.95	Yavatmal	Pusad	Pusad	Pusad	Arygaon	825	N-19.94.79	E-77.62.98
		10.00	0.73	7.30	Yavatmal	Pusad	Kali	Gunj	Hiwari-I	336	N-19.54.98	E-77.42.90
		10.00	0.73	7.30	Yavatmal	Pusad	Kali	Gunj	Hiwari-II	336	N-19.55.53	E-77.42.98
		15.00	0.73	10.95	Yavatmal	Pusad	Kali	Kali	Tivrang	13	N-19.54.98	E-77.42.70
		20.00	0.73	14.60	Yavatmal	Pusad	Kali	Gunj	Kasola	810	N-19.54.04	E-77.38.67

Works proposed					Location of work						Latlong	
Rule No.	**Item of work**	**Quantity**	**Rate**	**Amount (Rs. in Lakhs**	**Circle**	**Division**	**Range**	**Round**	**Beat**	**Compartment No**	**Longitude**	**Latitude**
1	**2**	**3**	**4**	**5**	**6**	**7**	**8**	**9**	**10**	**11**	**12**	**13**
iii	Fodder Development (SYO Works)	25.00	0.73	18.25	Yavatmal	Pusad	Digras	Singad	Rui	807	N-20.02.49	E-77.39.76
		30.00	0.73	21.90	Yavatmal	Pusad	Digras	Digras	Digras	739	N-20.19.09	E-77.79.39
		25.00	0.73	18.25	Yavatmal	Pusad	Umarkhed	Jewli	Pimpalgaon	495	N-19.31.30	E-77.56.57
		25.00	0.73	18.25	Yavatmal	Pusad	Umarkhed	Jewli	Pimpalgaon	495	N-19.31.18	E-77.57.28
		20.00	0.73	14.60	Yavatmal	Pusad	Umarkhed	Jewli	Pimpalgaon	495	N-19.31.12	E-77.57.41
		10.00	0.73	7.30	Yavatmal	Pusad	Shembalpimpri	Fulwadi	Jamnaik	413	N-19.48.22	E-77.26.23
		245.00		**178.85**								
		10.00	0.73	7.30	Yavatmal	Washim	Karanja	Karanja	Kherda	404	E-77.2323	N-20.3414
		10.00	0.73	7.30	Yavatmal	Washim	Karanja	Karanja	Kherda	405	E-77.2517	N-20.3428
		10.00	0.73	7.30	Yavatmal	Washim	Manora	Manora	Sawargaon (T)	429	N-20º 15' 33.42"	N-77º 35' 55.26"
		5.00	0.73	3.70	Yavatmal	Washim	Manora	Manora	Sawargaon (T)	429	N-20º 15' 33.84"	N-77º 35' 35.10"
		10.00	0.73	7.30	Yavatmal	Washim	Manora	Manora	Waigol	C-216	E-20º 07' 47.04"	N-77º 37' 51.72"
		10.00	0.73	7.30	Yavatmal	Washim	Manora	Manora	Kakadchikhli	437	E-20º 05' 36.42"	N-77º 38' 16.44"
		10.00	0.73	7.30	Yavatmal	Washim	Manora	Manora	Pimpalshenda	436	E-20º 08' 33.18"	N-77º 35' 14.60"
		5.00	0.73	3.70	Yavatmal	Washim	Manora	Manora	Pimpalshenda	436	E-20º 07' 08.28"	N-77º 37' 05.10"
		10.00	0.73	7.30	Yavatmal	Washim	Malegaon	Amana	Amana-3	C-181	E-77.101226	N-20.294807
		10.00	0.73	7.30	Yavatmal	Washim	Malegaon	Amana	Amana-3	C-181	E-77.090379	N-20.302399
		10.00	0.73	7.30	Yavatmal	Washim	Malegaon	Amana	Amana-3	C-181	E-77.08802	N-20.306737
		5.00	0.73	3.70	Yavatmal	Washim	Malegaon	Amana	Amana-1	E-4	E-77.068649	N-20.233276
		10.00	0.73	7.30	Yavatmal	Washim	Washim	Washim	Shirputi-1	402	E-77.172781	N-20.021621
		10.00	0.73	7.30	Yavatmal	Washim	Washim	Washim	Shirputi-1	402	E-77.176375	N-20.015309
		10.00	0.73	7.30	Yavatmal	Washim	Washim	Washim	Shirputi-2	158	E-77.243492	N-19.997687
		10.00	0.73	7.30	Yavatmal	Washim	Washim	Washim	Shirputi-2	158	E-77.2435	N-19.997704
		145.00		**106.00**								
	Total SYO	**884.00**		**646.00**								
	Total for Silvicultural operations in forests	**1338.00**		**1383.00**								

Works proposed					Location of work						Latlong	
Rule No.	Item of work	Quantity	Rate	Amount (Rs. in Lakhs	Circle	Division	Range	Round	Beat	Compartment No	Longitude	Latitude
1	2	3	4	5	6	7	8	9	10	11	12	13
5(2) (d)	**Protection of plantations and forests**											
i	Encroachment removal & Forest Protection	20.00	14.00	14.00	Yavatmal	Washim	Malegaon	Amana	Tapovan	E-16, E-17	E- 77.070678	N- 20.261302
ii	Survey, Demarcation & Fencing of Sensitive forest areas	600.00	12.00	12.00	Yavatmal	Washim	Washim	Washim	Shirputi-1	Washim Municipal Corporation	E-77.14	N-20.105
		600.00	12.00	12.00	Yavatmal	Washim	Karanja	Karanja	Karanja	Karanja Municipal Corporation	E-77.477	N-20.486
	clearing of boundary 10 M.D./km length	5000.00		2.00	Yavatmal	Pusad	Kali	Kali	kali	13	N 19.57.15	E 77.52.53
		6200.00		26.00								
iii	Boundry Pillar Class I	12	0.08	0.96	Yavatmal	Yavatmal	Wadgaon D	Wadgaon D	Chichghat	337	N-20.26.73	E-78.23.63
		24	0.08	1.92	Yavatmal	Yavatmal	Wadgaon D	Kolambi	Ghodkhendi	298	N-20.16.53	E-78.11.49
		12	0.08	0.96	Yavatmal	Yavatmal	Wadgaon D	Kolambi	Ghodkhendi	309	N-20.17.18	E-78.10.05
		12	0.08	0.96	Yavatmal	Yavatmal	Wadgaon D	Ramgaon	Ramgaon	252	N-20.12.37	E-78.17.05
		12	0.08	0.96	Yavatmal	Yavatmal	Wadgaon D	Wadgaon D	Wadgaon D	334	N-20.25.01	E-78.10.05
		5	0.08	0.40	Yavatmal	Yavatmal	Wadgaon D	Wadgaon D	Sukali	376	N-20.24.74	E-78.29.63
		12	0.08	0.96	Yavatmal	Yavatmal	Wadgaon D	Wadgaon	Sukali	333	N-20.23.24	E-78.27.64
		6	0.08	0.48	Yavatmal	Yavatmal	Hiwari	Nakaparda	Loni	307	N-20.15.55	E-78.09.12
		3	0.08	0.24	Yavatmal	Yavatmal	Hiwari	Nakaparda	Loni	310	N-20.15.31	E-78.08.57
		27	0.08	2.16	Yavatmal	Yavatmal	Darwha	Karajgaon	Dhamangaon	155	N-20.19.39	E-77.35.30
		21	0.08	1.68	Yavatmal	Yavatmal	Darwha	Darwha	Brahmath	165	N-20.14.13	E-77.44.86
		7	0.08	0.56	Yavatmal	Yavatmal	South Arni	Sawali	Sakhartanda	1	N-19.58.12	E-78.85.23
		13	0.08	1.04	Yavatmal	Yavatmal	South Arni	Sawali	Sakhartanda	29	N-19.59.30	E-78.64.69
		7	0.08	0.56	Yavatmal	Yavatmal	South Arni	Sawali	Varudtuka	4	N-19.55.38	E-78.65.39
		5	0.08	0.40	Yavatmal	Yavatmal	South Arni	Sawali	Varudtuka	5	N-19.55.10	E-78.53.74
		13	0.08	1.04	Yavatmal	Yavatmal	South Arni	Sawali	Varudtuka	6	N-19.54.36	E-78.54.64
		13	0.08	1.04	Yavatmal	Yavatmal	South Arni	Sawali	Palodi	2	N-19.57.20	E-78.95.31
		17	0.08	1.36	Yavatmal	Yavatmal	South Arni	Sawali	Palodi	3	N-19.56.50	E-78.83.46
		12	0.08	0.96	Yavatmal	Yavatmal	South Arni	Sawali	Malegaon	7	N-19.55.11	E-78.42.86
		12	0.08	0.96	Yavatmal	Yavatmal	South Arni	Sawali	Malegaon	8	N-19.55.56	E-78.21.55
		8	0.08	0.64	Yavatmal	Yavatmal	South Arni	Sawali	Palshi	28	N-20.02.59	E-78.54.19
		7	0.08	0.56	Yavatmal	Yavatmal	South Arni	Sawali	Palshi	30	N-20.04.50	E-78.45.74
		5	0.08	0.40	Yavatmal	Yavatmal	South Arni	Belora	Belora	21	N-19.59.22	E-78.49.00

Works proposed					Location of work						Latlong	
Rule No.	Item of work	Quantity	Rate	Amount (Rs. in Lakhs	Circle	Division	Range	Round	Beat	Compartment No	Longitude	Latitude
1	2	3	4	5	6	7	8	9	10	11	12	13
iii	Boundry Pillar Class I	14	0.08	1.12	Yavatmal	Yavatmal	South Arni	Belora	Belora	25	N-20.00.71	E-78.41.77
		5	0.08	0.40	Yavatmal	Yavatmal	South Arni	Belora	Belora	26	N-20.04.19	E-78.42.22
		7	0.08	0.56	Yavatmal	Yavatmal	South Arni	Belora	Chatari	23	N-20.02.06	E-78.25.93
		1	0.08	0.08	Yavatmal	Yavatmal	South Arni	Belora	Chatari	24	N-20.00.24	E-78.35.13
		4	0.08	0.32	Yavatmal	Yavatmal	South Arni	Belora	Chatari	27	N-20.19.27	E-78.33.86
		8	0.08	0.64	Yavatmal	Yavatmal	South Arni	Belora	Chatari	35	N-20.14.34	E-78.34.75
		9	0.08	0.72	Yavatmal	Yavatmal	South Arni	Belora	Chatari	36	N-20.04.72	E-78.14.95
		8	0.08	0.64	Yavatmal	Yavatmal	South Arni	Belora	Daheli	20	N-19.58.32	E-78.44.79
		7	0.08	0.56	Yavatmal	Yavatmal	South Arni	Belora	Daheli	22	N-19.59.87	E-78.22.81
		8	0.08	0.64	Yavatmal	Yavatmal	South Arni	Anjnkhed	Anjnkhed	47	N-19.56.85	E-78.03.56
		10	0.08	0.80	Yavatmal	Yavatmal	South Arni	Anjnkhed	Anjnkhed	49	N-19.56.34	E-77.59.34
		5	0.08	0.40	Yavatmal	Yavatmal	South Arni	Anjnkhed	Kurha Du	41	N-19.59.43	E-77.59.15
		13	0.08	1.04	Yavatmal	Yavatmal	South Arni	Anjnkhed	Kurha Du	42	N-20.12.22	E-77.58.59
		10	0.08	0.80	Yavatmal	Yavatmal	South Arni	Anjnkhed	Kurha Du	46	N-19.59.55	E-77.58.21
		14	0.08	1.12	Yavatmal	Yavatmal	South Arni	Anjnkhed	Bhanchara	37	N-20.11.43	E-78.03.19
		3	0.08	0.24	Yavatmal	Yavatmal	South Arni	Anjnkhed	Bhanchara	38	N-19.58.59	E-78.05.98
		15	0.08	1.20	Yavatmal	Yavatmal	South Arni	Anjnkhed	Shari	39	N-19.58.49	E-78.12.52
		8	0.08	0.64	Yavatmal	Yavatmal	South Arni	Anjnkhed	Shari	40	N-19.58.26	E-78.04.90
		6	0.08	0.48	Yavatmal	Yavatmal	South Arni	Anjnkhed	Ranidhanora	48	N-19.55.15	E-77.59.37
		14	0.08	1.12	Yavatmal	Yavatmal	South Arni	Anjnkhed	Ranidhanora	55	N-19.55.15	E-77.59.37
		10	0.08	0.80	Yavatmal	Yavatmal	Ner	Malkhed	Malkhed	420	N-20.43.00	E-77.92.52
		10	0.08	0.80	Yavatmal	Yavatmal	Ner	Ner	Bangaon	437	N-20.46.03	E-77.77.11
		10	0.08	0.80	Yavatmal	Yavatmal	Ner	Malkhed	Lohi	418	N-20.49.35	E-77.91.29
		10	0.08	0.80	Yavatmal	Yavatmal	Ner	Malkhed	Lohi	419	N-20.28.12	E-77.55.29
		10	0.08	0.80	Yavatmal	Yavatmal	Ner	Malkhed	Javalgaon	205	N-20.08.04	E-77.44.34
		9	0.08	0.72	Yavatmal	Yavatmal	Jodmoha	Kalamb	Chaparda	353	N-20.25.11	E-78.14.00
		24	0.08	1.92	Yavatmal	Yavatmal	Jodmoha	Kalamb	Kalamb	360	N-20.16.45	E-78.16.27
		18	0.08	1.44	Yavatmal	Yavatmal	Jodmoha	Kalamb	Mandhala	359	N-20.27.40	E-78.16.22
		6	0.08	0.48	Yavatmal	Yavatmal	Yavatmal	Waghapur	Waghapur	467	N-20.25.19	E-78.04.57
		6	0.08	0.48	Yavatmal	Yavatmal	Yavatmal	Waghapur	Kita	469	N-20.25.52	E-78.05.17
		2	0.08	0.16	Yavatmal	Yavatmal	Yavatmal	Waghapur	Kita	475	N-20.26.26	E-78.04.26

Works proposed					Location of work						Latlong	
Rule No.	Item of work	Quantity	Rate	Amount (Rs. in Lakhs	Circle	Division	Range	Round	Beat	Compartment No	Longitude	Latitude
1	2	3	4	5	6	7	8	9	10	11	12	13
iii	Boundry Pillar Class I	18	0.08	1.44	Yavatmal	Yavatmal	Yavatmal	Waghapur	lakhamapur	409	N-20.43.30	E-78.97.65
		15	0.08	1.20	Yavatmal	Yavatmal	Yavatmal	Waghapur	lakhamapur	408	N-20.44.56	E-78.01.91
		582.00		**46.56**								
		18	0.08	1.44	YTL	PKD	Parwa	Patapangara	Zatala	820	N 19.979915	E 78.295815
		55	0.08	4.40	YTL	PKD	Parwa	Patapangara	Patapangara1	823	N 19.963128	E 78.232014
		4	0.08	0.32	YTL	PKD	Parwa	Patapangara	Manusdhari	819	N 19.960050	E 78.210193
		57	0.08	4.56	YTL	PKD	Parwa	Patapangara	Manusdhari	821	N 19.950967	E 78.198567
		1	0.08	0.08	YTL	PKD	Parwa	Patapangara	Manusdhari	818	N 19.960853	E 78.187490
		31	0.08	2.48	YTL	PKD	Parwa	Patapangara	Manusdhari	817	N 19.986134	E 78.188538
		118	0.08	9.44	YTL	PKD	Parwa	Patapangara	Patapangara1	177	N 19.990619	E 78.229181
		7	0.08	0.56	YTL	PKD	Parwa	Patapangara	Patapangara2	178	N 19.987081	E 78.212026
		41	0.08	3.28	YTL	PKD	Parwa	Patapangara	Manusdhari	666	N 19.971791	E 78.177866
		104	0.08	8.32	YTL	PKD	Parwa	Patapangara	Manusdhari	667	N 19.959843	E 78.196476
		61	0.08	4.88	YTL	PKD	Parwa	Patapangara	Manusdhari	668	N 19.962688	E 78.186285
		48	0.08	3.84	YTL	PKD	Pandharkawada	Pandharkawada	Pandharkawada	CA74	N 20.027926	E 78.571584
		10	0.08	0.80	YTL	PKD	Pandharkawada	Pandharkawada	Pandharkawada	C73A	N 20.018309	E 78.565273
		58	0.08	4.64	YTL	PKD	Pandharkawada	Pandharkawada	Pandharkawada	C75	N 20.036122	E 78.538330
		33	0.08	2.64	YTL	PKD	Pandharkawada	Pandharkawada	Pandharkawada	C76A	N 20.068889	E 78.504479
		15	0.08	1.20	YTL	PKD	Pandharkawada	Pandharkawada	Pandharkawada	C76B	N 20.056079	E 78.495743
		16	0.08	1.28	YTL	PKD	Pandharkawada	Pandharkawada	Kondi	68	N 20.000276	E 78.613671
		58	0.08	4.64	YTL	PKD	Pandharkawada	Pandharkawada	Akoli	644	N 20.009210	E 78.593665
		76	0.08	6.08	YTL	PKD	Pandharkawada	Pandharkawada	Pandharkawada	645	N 20.037374	E 78.628194
		39	0.08	3.12	YTL	PKD	Pandharkawada	Pandharkawada	Pandharkawada	646	N 20.020378	E 78.614556
		10	0.08	0.80	YTL	PKD	Pandharkawada	Arli	Ghubadi	C102	N 19.816276	E 78.476368
		6	0.08	0.48	YTL	PKD	Pandharkawada	Arli	Ghubadi	C103	N 19.844331	E 78.460838
		44	0.08	3.52	YTL	PKD	Pandharkawada	Arli	Khairi	636	N 19.798204	E 78.497660
		63	0.08	5.04	YTL	PKD	Pandharkawada	Arli	Arli	122	N 19.82422	E 78.421482
		64	0.08	5.12	YTL	PKD	Pandharkawada	Arli	Arli	123	N 19.843949	E 78.399549
		28	0.08	2.24	YTL	PKD	Pandharkawada	Umari	Ghodara	77	N 20.14438	E 78.55608
		21	0.08	1.68	YTL	PKD	Pandharkawada	Umari	Kinhala	79	N 20.142965	E 78.536323
		23	0.08	1.84	YTL	PKD	Pandharkawada	Umari	Ghodara	80	N 20.131093	E 78.526503

Works proposed					Location of work						Latlong	
Rule No.	Item of work	Quantity	Rate	Amount (Rs. in Lakhs	Circle	Division	Range	Round	Beat	Compartment No	Longitude	Latitude
1	2	3	4	5	6	7	8	9	10	11	12	13
iii	Boundry Pillar Class I	80	0.08	6.40	YTL	PKD	Maregaon	Ralegaon	Warna	801	N 20.357735	E 78.453439
		20	0.08	1.60	YTL	PKD	Maregaon	Ralegaon	Warna	802	N 20.346203	E 78.569074
		20	0.08	1.60	YTL	PKD	Maregaon	Ralegaon	Warna	803	N 20.313845	E 78.549072
		60	0.08	4.80	YTL	PKD	Maregaon	Botoni	Gondburanda	C60	N 20.155491	E 78.769740
		20	0.08	1.60	YTL	PKD	Maregaon	Botoni	Khairgaon	C59	N 20.156168	E 78.795229
		30	0.08	2.40	YTL	PKD	Maregaon	Maregaon	Mardi	1	N 20.178408	E 78.869719
		20	0.08	1.60	YTL	PKD	Maregaon	Maregaon	Mardi	2	N 20.165322	E 78.861620
		25	0.08	2.00	YTL	PKD	Maregaon	Maregaon	Mardi	3	N 20.152104	E 78.863495
		11	0.08	0.88	YTL	PKD	Maregaon	Maregaon	Mardi	C5	N 20.221468	E 78.876058
		4	0.08	0.32	YTL	PKD	Maregaon	Maregaon	Mardi	C1A	N 20.271238	E 78.811041
		8	0.08	0.64	YTL	PKD	Maregaon	Maregaon	Mardi	C1B	N 20.270135	E 78.815237
		30	0.08	2.40	YTL	PKD	Maregaon	Maregaon	Mardi	C2A	N 20.237316	E 78.776488
		12	0.08	0.96	YTL	PKD	Maregaon	Maregaon	Mardi	C2B	N 20.217885	E 78.784900
		11	0.08	0.88	YTL	PKD	Maregaon	Maregaon	Mardi	C3A	N 20.226007	E 78.791479
		12	0.08	0.96	YTL	PKD	Maregaon	Maregaon	Mardi	C3B	N 20.214686	E 78.780913
		12	0.08	0.96	YTL	PKD	Maregaon	Maregaon	Mardi	610	N 20.242365	E 78.792268
		1484		**118.72**								
		75	0.08	6.00	Yavatmal	Pusad	Pusad	Pusad	Jawaharnagar	352	N-20.00.42	E-77.38.03
		75	0.08	6.00	Yavatmal	Pusad	Pusad	Pusad	Dhundi	355	N-20.01.24	E-77.36.52
		75	0.08	6.00	Yavatmal	Pusad	Pusad	Pusad	Belghavn	356	N-20.01.42	E-77.36.47
		75	0.08	6.00	Yavatmal	Pusad	Pusad	Pusad	Belghavn	357	N-20.01.08	E-77.36.40
		90	0.08	7.20	Yavatmal	Pusad	Kali	Kali	kali	13	N 19.57.15	E 77.52.53
		50	0.08	4.00	Yavatmal	Pusad	Shambilpampri	Shembalpimpri	Shembalpimpri	404	N 19.53.48	E 77.29.55
		50	0.08	4.00	Yavatmal	Pusad	Umarkhed	-	-	466	N 19.36.52	E 77.50.36
		490		**39.20**								
		100.00	0.08	8.00	Yavatmal	Washim	Washim	Washim	ShirputiTornala	E-66E-47	N-20.0.12	E-77.1145
		100.00	0.08	8.00	Yavatmal	Washim	Malegaon	Mungla	Mungla	E-104	N-20.18108	E-76.53856
		25.00	0.08	2.00	Yavatmal	Washim	Manora	Manora	Sawargaon	C-216	N20^{0}14'50.32"	E77^{0}36'56.03"
		25.00	0.08	2.00	Yavatmal	Washim	Karanja	Karanja	Karanja	C-89	N-20.56.882	E-077.42.566
		250.00		**20.00**								
		2806.00		**224.48**								

Works proposed					Location of work						Latlong	
Rule No.	Item of work	Quantity	Rate	Amount (Rs. in Lakhs	Circle	Division	Range	Round	Beat	Compartment No	Longitude	Latitude
1	2	3	4	5	6	7	8	9	10	11	12	13
iv	Boundry Pillar Class I I	24	0.04	0.96	Yavatmal	Yavatmal	Wadgaon D	Wadgaon D	Chichghat	337	N-20.26.73	E-78.23.63
		50	0.04	2.00	Yavatmal	Yavatmal	Wadgaon D	Kolambi	Ghodkhendi	298	N-20.16.53	E-78.11.49
		24	0.04	0.96	Yavatmal	Yavatmal	Wadgaon D	Kolambi	Ghodkhendi	309	N-20.17.18	E-78.10.05
		24	0.04	0.96	Yavatmal	Yavatmal	Wadgaon D	Ramgaon	Ramgaon	252	N-20.12.37	E-78.17.05
		24	0.04	0.96	Yavatmal	Yavatmal	Wadgaon D	Wadgaon D	Wadgaon D	334	N-20.25.01	E-78.10.05
		12	0.04	0.48	Yavatmal	Yavatmal	Wadgaon D	Wadgaon D	Sukali	376	N-20.24.74	E-78.29.63
		24	0.04	0.96	Yavatmal	Yavatmal	Wadgaon D	Wadgaon	Sukali	333	N-20.23.24	E-78.27.64
		12	0.04	0.48	Yavatmal	Yavatmal	Hiwari	Nakaparda	Loni	307	N-20.15.55	E-78.09.12
		6	0.04	0.24	Yavatmal	Yavatmal	Hiwari	Nakaparda	Loni	310	N-20.15.31	E-78.08.57
		33	0.04	1.32	Yavatmal	Yavatmal	Darwha	Karajgaon	Dhamangaon	155	N-20.19.31	E-77.35.34
		36	0.04	1.44	Yavatmal	Yavatmal	Darwha	Darwha	Brahmath	165	N-20.14.79	E-77.45.04
		18	0.04	0.72	Yavatmal	Yavatmal	South Arni	Sawali	Sakhartanda	1	N-19.58.12	E-78.85.23
		17	0.04	0.68	Yavatmal	Yavatmal	South Arni	Sawali	Sakhartanda	29	N-19.59.30	E-78.64.69
		13	0.04	0.52	Yavatmal	Yavatmal	South Arni	Sawali	Varudtuka	4	N-19.55.38	E-78.65.39
		10	0.04	0.40	Yavatmal	Yavatmal	South Arni	Sawali	Varudtuka	5	N-19.55.10	E-78.53.74
		15	0.04	0.60	Yavatmal	Yavatmal	South Arni	Sawali	Varudtuka	6	N-19.54.36	E-78.54.64
		25	0.04	1.00	Yavatmal	Yavatmal	South Arni	Sawali	Palodi	2	N-19.57.20	E-78.95.31
		35	0.04	1.40	Yavatmal	Yavatmal	South Arni	Sawali	Palodi	3	N-19.56.50	E-78.83.46
		15	0.04	0.60	Yavatmal	Yavatmal	South Arni	Sawali	Malegaon	7	N-19.55.11	E-78.42.86
		28	0.04	1.12	Yavatmal	Yavatmal	South Arni	Sawali	Malegaon	8	N-19.55.56	E-78.21.55
		18	0.04	0.72	Yavatmal	Yavatmal	South Arni	Sawali	Palshi	28	N-20.02.59	E-78.54.19
		14	0.04	0.56	Yavatmal	Yavatmal	South Arni	Sawali	Palshi	30	N-20.04.50	E-78.45.74
		2	0.04	0.08	Yavatmal	Yavatmal	South Arni	Belora	Belora	21	N-19.59.22	E-78.49.00
		9	0.04	0.36	Yavatmal	Yavatmal	South Arni	Belora	Belora	25	N-20.00.71	E-78.41.77
		5	0.04	0.20	Yavatmal	Yavatmal	South Arni	Belora	Belora	26	N-20.04.19	E-78.42.22
		15	0.04	0.60	Yavatmal	Yavatmal	South Arni	Belora	Chatari	23	N-20.02.06	E-78.25.93
		2	0.04	0.08	Yavatmal	Yavatmal	South Arni	Belora	Chatari	24	N-20.00.24	E-78.35.13
		4	0.04	0.16	Yavatmal	Yavatmal	South Arni	Belora	Chatari	27	N-20.19.27	E-78.33.86
		9	0.04	0.36	Yavatmal	Yavatmal	South Arni	Belora	Chatari	35	N-20.14.34	E-78.34.75
		18	0.04	0.72	Yavatmal	Yavatmal	South Arni	Belora	Chatari	36	N-20.04.72	E-78.14.95
		12	0.04	0.48	Yavatmal	Yavatmal	South Arni	Belora	Daheli	20	N-19.58.32	E-78.44.79

Works proposed					Location of work						Latlong	
Rule No.	Item of work	Quantity	Rate	Amount (Rs. in Lakhs	Circle	Division	Range	Round	Beat	Compartment No	Longitude	Latitude
1	2	3	4	5	6	7	8	9	10	11	12	13
iv	Boundry Pillar Class I I	21	0.04	0.84	Yavatmal	Yavatmal	South Arni	Belora	Daheli	22	N-19.59.87	E-78.22.81
		24	0.04	0.96	Yavatmal	Yavatmal	South Arni	Anjnkhed	Anjnkhed	47	N-19.56.85	E-78.03.56
		21	0.04	0.84	Yavatmal	Yavatmal	South Arni	Anjnkhed	Anjnkhed	49	N-19.56.34	E-77.59.34
		6	0.04	0.24	Yavatmal	Yavatmal	South Arni	Anjnkhed	Kurha Du	41	N-19.59.43	E-77.59.15
		8	0.04	0.32	Yavatmal	Yavatmal	South Arni	Anjnkhed	Kurha Du	42	N-20.12.22	E-77.58.59
		8	0.04	0.32	Yavatmal	Yavatmal	South Arni	Anjnkhed	Kurha Du	46	N-19.59.55	E-77.58.21
		20	0.04	0.80	Yavatmal	Yavatmal	South Arni	Anjnkhed	Bhanchara	37	N-20.11.43	E-78.03.19
		13	0.04	0.52	Yavatmal	Yavatmal	South Arni	Anjnkhed	Bhanchara	38	N-19.58.59	E-78.05.98
		12	0.04	0.48	Yavatmal	Yavatmal	South Arni	Anjnkhed	Shari	39	N-19.58.49	E-78.12.52
		6	0.04	0.24	Yavatmal	Yavatmal	South Arni	Anjnkhed	Shari	40	N-19.58.26	E-78.04.90
		8	0.04	0.32	Yavatmal	Yavatmal	South Arni	Anjnkhed	Ranidhanora	48	N-19.55.15	E-77.59.37
		6	0.04	0.24	Yavatmal	Yavatmal	South Arni	Anjnkhed	Ranidhanora	55	N-19.55.15	E-77.59.37
		20	0.04	0.80	Yavatmal	Yavatmal	Ner	Malkhed	Malkhed	420	N-20.43.00	E-77.92.52
		20	0.04	0.80	Yavatmal	Yavatmal	Ner	Ner	Bangaon	437	N-20.46.03	E-77.77.11
		20	0.04	0.80	Yavatmal	Yavatmal	Ner	Malkhed	Lohi	418	N-20.49.35	E-77.91.29
		20	0.04	0.80	Yavatmal	Yavatmal	Ner	Malkhed	Lohi	419	N-20.28.12	E-77.55.29
		20	0.04	0.80	Yavatmal	Yavatmal	Ner	Malkhed	Javalgaon	205	N-20.08.04	E-77.44.34
		18	0.04	0.72	Yavatmal	Yavatmal	Jodmoha	Kalamb	Chaparda	353	N-20.25.11	E-78.14.00
		18	0.04	0.72	Yavatmal	Yavatmal	Jodmoha	Kalamb	Kalamb	360	N-20.16.45	E-78.16.27
		8	0.04	0.32	Yavatmal	Yavatmal	Jodmoha	Kalamb	Mandhala	359	N-20.27.40	E-78.16.22
		12	0.04	0.48	Yavatmal	Yavatmal	Yavatmal	Waghapur	Waghapur	467	N-20.25.19	E-78.04.57
		18	0.04	0.72	Yavatmal	Yavatmal	Yavatmal	Waghapur	Kita	469	N-20.25.52	E-78.05.17
		4	0.04	0.16	Yavatmal	Yavatmal	Yavatmal	Waghapur	Kita	475	N-20.26.26	E-78.04.26
		10	0.04	0.40	Yavatmal	Yavatmal	Yavatmal	Waghapur	lakhamapur	409	N-20.43.30	E-78.97.65
		10	0.04	0.40	Yavatmal	Yavatmal	Yavatmal	Waghapur	lakhamapur	408	N-20.44.56	E-78.01.91
		904		**36.16**								
		35	0.04	1.40	YTL	PKD	Parwa	Patapangara	Zatala	820	N 19.979915	E 78.295815
		110	0.04	4.40	YTL	PKD	Parwa	Patapangara	Patapangara1	823	N 19.963128	E 78.232014
		8	0.04	0.32	YTL	PKD	Parwa	Patapangara	Manusdhari	819	N 19.960050	E 78.210193
		114	0.04	4.56	YTL	PKD	Parwa	Patapangara	Manusdhari	821	N 19.950967	E 78.198567
		1	0.04	0.04	YTL	PKD	Parwa	Patapangara	Manusdhari	818	N 19.960853	E 78.187490

Works proposed					Location of work						Latlong	
Rule No.	Item of work	Quantity	Rate	Amount (Rs. in Lakhs	Circle	Division	Range	Round	Beat	Compartment No	Longitude	Latitude
1	2	3	4	5	6	7	8	9	10	11	12	13
iv	Boundry Pillar Class I I	61	0.04	2.44	YTL	PKD	Parwa	Patapangara	Manusdhari	817	N 19.986134	E 78.188538
		236	0.04	9.44	YTL	PKD	Parwa	Patapangara	Patapangara1	177	N 19.990619	E 78.229181
		13	0.04	0.52	YTL	PKD	Parwa	Patapangara	Patapangara2	178	N 19.987081	E 78.212026
		81	0.04	3.24	YTL	PKD	Parwa	Patapangara	Manusdhari	666	N 19.971791	E 78.177866
		208	0.04	8.32	YTL	PKD	Parwa	Patapangara	Manusdhari	667	N 19.959843	E 78.196476
		123	0.04	4.92	YTL	PKD	Parwa	Patapangara	Manusdhari	668	N 19.962688	E 78.186285
		98	0.04	3.92	YTL	PKD	PKD	PKD	PKD	CA74	N 20.027926	E 78.571584
		16	0.04	0.64	YTL	PKD	PKD	PKD	PKD	C73A	N 20.018309	E 78.565273
		75	0.04	3.00	YTL	PKD	PKD	PKD	PKD	C75	N 20.036122	E 78.538330
		60	0.04	2.40	YTL	PKD	PKD	PKD	PKD	C76A	N 20.068889	E 78.504479
		25	0.04	1.00	YTL	PKD	PKD	PKD	PKD	C76B	N 20.056079	E 78.495743
		25	0.04	1.00	YTL	PKD	PKD	PKD	Kondi	68	N 20.000276	E 78.613671
		75	0.04	3.00	YTL	PKD	PKD	PKD	Akoli	644	N 20.009210	E 78.593665
		100	0.04	4.00	YTL	PKD	PKD	PKD	PKD	645	N 20.037374	E 78.628194
		70	0.04	2.80	YTL	PKD	PKD	PKD	PKD	646	N 20.020378	E 78.614556
		20	0.04	0.80	YTL	PKD	PKD	Arli	Ghubadi	C102	N 19.816276	E 78.476368
		10	0.04	0.40	YTL	PKD	PKD	Arli	Ghubadi	C103	N 19.844331	E 78.460838
		95	0.04	3.80	YTL	PKD	PKD	Arli	Khairi	636	N 19.798204	E 78.497660
		100	0.04	4.00	YTL	PKD	PKD	Arli	Arli	122	N 19.82422	E 78.421482
		101	0.04	4.04	YTL	PKD	PKD	Arli	Arli	123	N 19.843949	E 78.399549
		55	0.04	2.20	YTL	PKD	PKD	Umari	Ghodara	77	N 20.14438	E 78.55608
		30	0.04	1.20	YTL	PKD	PKD	Umari	Kinhala	79	N 20.142965	E 78.536323
		33	0.04	1.32	YTL	PKD	PKD	Umari	Ghodara	80	N 20.131093	E 78.526503
		100	0.04	4.00	YTL	PKD	Maregaon	Ralegaon	Warna	801	N 20.357735	E 78.453439
		30	0.04	1.20	YTL	PKD	Maregaon	Ralegaon	Warna	802	N 20.346203	E 78.569074
		30	0.04	1.20	YTL	PKD	Maregaon	Ralegaon	Warna	803	N 20.313845	E 78.549072
		90	0.04	3.60	YTL	PKD	Maregaon	Botoni	Gondburanda	C60	N 20.155491	E 78.769740
		32	0.04	1.28	YTL	PKD	Maregaon	Botoni	Khairgaon	C59	N 20.156168	E 78.795229
		50	0.04	2.00	YTL	PKD	Maregaon	Maregaon	Mardi	1	N 20.178408	E 78.869719
		40	0.04	1.60	YTL	PKD	Maregaon	Maregaon	Mardi	2	N 20.165322	E 78.861620
		50	0.04	2.00	YTL	PKD	Maregaon	Maregaon	Mardi	3	N 20.152104	E 78.863495

Works proposed					Location of work						Latlong	
Rule No.	Item of work	Quantity	Rate	Amount (Rs. in Lakhs	Circle	Division	Range	Round	Beat	Compartment No	Longitude	Latitude
1	2	3	4	5	6	7	8	9	10	11	12	13
iv	Boundry Pillar Class I I	22	0.04	0.88	YTL	PKD	Maregaon	Maregaon	Mardi	C5	N 20.221468	E 78.876058
		8	0.04	0.32	YTL	PKD	Maregaon	Maregaon	Mardi	C1A	N 20.271238	E 78.811041
		12	0.04	0.48	YTL	PKD	Maregaon	Maregaon	Mardi	C1B	N 20.270135	E 78.815237
		40	0.04	1.60	YTL	PKD	Maregaon	Maregaon	Mardi	C2A	N 20.237316	E 78.776488
		25	0.04	1.00	YTL	PKD	Maregaon	Maregaon	Mardi	C2B	N 20.217885	E 78.784900
		22	0.04	0.88	YTL	PKD	Maregaon	Maregaon	Mardi	C3A	N 20.226007	E 78.791479
		25	0.04	1.00	YTL	PKD	Maregaon	Maregaon	Mardi	C3B	N 20.214686	E 78.780913
		25	0.04	1.00	YTL	PKD	Maregaon	Maregaon	Mardi	610	N 20.242365	E 78.792268
		2579		**103.16**								
		100	0.04	4.00	Yavatmal	Pusad	Shambilpampri	Shembalpimpri	Jamnaik	413	N 19.48.16	E 77.25.41
		150	0.04	6.00	Yavatmal	Pusad	Kali	Gunj	Tivrang	13	N 19.57.46	E 77.52.29
		100	0.04	4.00	Yavatmal	Pusad	Umarkhed	Krishnapur	Krishnapur	465	N 19.36.37	E 77.50.51
		350.00		**14.00**								
		100.00	0.04	4.00	Yavatmal	Washim	Washim	Washim	Shirputi	E-66	E-77.1145	N-20.0.12
		100.00	0.04	4.00	Yavatmal	Washim	Malegaon	Mungla	Mungla	E-104	E-76.53856	N-20.18108
		25.00	0.04	1.00	Yavatmal	Washim	Manora	Manora	Sawargaon	C-216	$E77^{0}36'56.03"$	$N20^{0}14'50.32"$
		25.00	0.04	1.00	Yavatmal	Washim	Karanja	Karanja	Karanja	C-89	E-077.42.566	N-20.56.882
		250.00		**10.00**								
		4083.00		**163.32**								
	Potection Hut Mandva	1	20	20.00	YTL	PKD	Ghatanji	Sakhara	Mandva	-	N 20.035993	E078.23084
	Potection Hut Shivni	1	20	20.00	YTL	PKD	Ghatanji	Ghatanji	Shivni	-	N 20.10130	E078.24515
	Potection Hut Mudhati	1	20	20.00	YTL	PKD	Jamni	Matharju	Mudhati B	52	N 19.855318	E078.678822
	New Construction of Labour sheade	1	6	6.00	YTL	PKD	Ghatanji	Ghatanji	Kopara	-	N 20.08014	E78.18592
	New Construction of Labour sheade	1	6	6.00	YTL	PKD	Ghatanji	Ghatanji	Kopara	-	N 20.08022	E78.18589
	New Construction of Labour sheade	1	6	6.00	YTL	PKD	Ghatanji	Ghatanji	Kopara	-	N 20.08026	E78.18530
v	Labour Shed Washim Colony	1.00	6.00	6.00	Yavatmal	Washim	Washim	Washim	Colony	Washim Municipal Corporation	N-20.7.3	E-77.8.15
	Labour Shed	1.00	6.00	6.00	Yavatmal	Washim	Washim	Washim	Shirputi-1		N-20.127	E-77.135
	Labour Shed Karanja Range	1.00	6.00	6.00	Yavatmal	Washim	Karanja	Mangrulpir	Kasola	Mangrulpir Municipal Corporation	N-20.30	E-77.33
		9.00		96.00								

Works proposed					Location of work						Latlong	
Rule No.	**Item of work**	**Quantity**	**Rate**	**Amount (Rs. in Lakhs**	**Circle**	**Division**	**Range**	**Round**	**Beat**	**Compartment No**	**Longitude**	**Latitude**
1	**2**	**3**	**4**	**5**	**6**	**7**	**8**	**9**	**10**	**11**	**12**	**13**
vii	Improving mobility of frontline staff for forest protection & patrolling. (Vehical for Fire Squad)	LS	LS	2.00	Yavatmal	Yavatmal						
		LS	LS	2.00	Yavatmal	PKD						
		LS	LS	2.00	Yavatmal	Pusad						
		LS	LS	2.00	Yavatmal	Washim						
				8.00								
	Total for Protection of plantations and forests	**13118.00**		**531.80**								
5(2) (f)	**"Forest fire prevention and control operations"**											
(ii)	Cutting & burning of fire lines (Km)	14.273	-	0.86	Yavatmal	PKD	PKD	PKD	PKD	6,45,446	N 20.035203 N 20.020714	E 78.626849 E 78.615326
		5.708	-	0.84	Yavatmal	PKD	PKD	PKD	Kondi	68	N 20.003113	E 78.611046
		14.586	-	0.86	Yavatmal	PKD	PKD	PKD	Pahapal	1,06,648	N 20.039861 N 20.023165	E 78.478242 E 78.444610
		4.707	-	0.84	Yavatmal	PKD	PKD	PKD	Tiwsala	74	N 20.03467	E 78.618206
		6.623	-	0.84	Yavatmal	PKD	PKD	PKD	Akoli	644	N 20.011107	E 78.596405
		10.125	-	0.86	Yavatmal	PKD	PKD	Patanbori	Sunna	104A,104B	N 19.930127 N 19.910479	E 78.529221 E 78.528943
		13.854	-	0.84	Yavatmal	PKD	PKD	Patanbori	Patanbori	97,100,	N 19.838210 N 19.833472	E 78.596137 E 78.551375
		13.296	-	0.84	Yavatmal	PKD	Parwa	Patapangra	Patapangra	177	N 19.960749	E 78.250749
		7.877	-	0.84	Yavatmal	PKD	Parwa	Patapangra	Patapangra-2	178	N 19.988742	E 78.202842
		7.192	-	0.84	Yavatmal	PKD	Parwa	Patapangra	Zotala	164	N 19.996078	E 78.28643
		10.874	-	0.86	Yavatmal	PKD	Parwa	Parwa	parwa	c610,c611	N 20.000138 N 19.983946	E 78.381923 E 78.376725
		9.632	-	0.84	Yavatmal	PKD	Parwa	Kurli	bilayata	1,80,181	N 19.547856 N 19.945162	E 78.233602 E 78.227169
		8.972	-	0.84	Yavatmal	PKD	Parwa	Kurli	Sawangi	669	N 19 56 57.00	E 78 18 30.00
		127.719		**11.00**								

Works proposed					Location of work						Latlong	
Rule No.	Item of work	Quantity	Rate	Amount (Rs. in Lakhs	Circle	Division	Range	Round	Beat	Compartment No	Longitude	Latitude
1	2	3	4	5	6	7	8	9	10	11	12	13
iv)	**Cutting & burning of fire lines (Km)**	100	0.013	1.30	Yavatmal	Pusad	Digras	Singed	Singed	345	N-20.02.11	E-77.62.58
		200	0.018	3.60	Yavatmal	Pusad	Digras	Arambi	Tiwari	743	N-20.02.11	E-77.62.58
		5	0.0550	0.28	Yavatmal	Pusad	Umarkhed	Umarkhed	Nagapur Depo	465	N-19.36.10	E-77.44.25
		600	0.028	16.80	Yavatmal	Pusad	Kali	Kali	Kali	333	N-19.67.32	E-77.39.46
		905		**21.98**								
		36.80	0.03	1.10	Yavatmal	Washim	Malegaon	Mungala	Mungala-1	43	N 20.268911	E 76.867508
		17.00	0.03	0.51	Yavatmal	Washim	Malegaon	Mungala	Mungala-2	46, E-104	N 20.296239	E 76.892939
		18.50	0.03	0.56	Yavatmal	Washim	Malegaon	Mungala	Regaon-1	38, 39, E-117	N 20.223681	E 76.872558
		19.00	0.03	0.57	Yavatmal	Washim	Malegaon	Mungala	Regaon-2	40, E-118, 106, 105	N 20.251683	E 76.869192
		20.00	0.03	0.60	Yavatmal	Washim	Malegaon	Mungala	Kolgaon	41, 42, 37, E-110, 111, 113,	N 20.245158	E 76.856733
		15.00	0.03	0.45	Yavatmal	Washim	Malegaon	Pangra	Devthana-1	79, 90, 91	N 20.402244	E 77.032658
		11.00	0.03	0.33	Yavatmal	Washim	Malegaon	Pangra	Devthana-2	94, 92	N 20.378169	E 77.037822
		14.00	0.03	0.42	Yavatmal	Washim	Malegaon	Pangra	Devthana-3	E-1, 2, 3, 6, 7, 8, 9, 10, 126,	N 20.356172	E 77.027608
		19.00	0.03	0.57	Yavatmal	Washim	Malegaon	Pangra	Pangra-1	86	N 20.4367	E 77.052244
		46.50	0.03	1.40	Yavatmal	Washim	Malegaon	Pangra	Pangra-2	89, E-120, 121, 122, 123	N 20.416553	E 77.014028
		35.68	0.03	1.07	Yavatmal	Washim	Malegaon	Amana	Amana-1	96, 97, 98, E-4, 5	N 20.390067	E 77.070033
		13.80	0.03	0.41	Yavatmal	Washim	Malegaon	Amana	Amana-2	100, 101	N 20.361222	E 77.109819
		18.90	0.03	0.57	Yavatmal	Washim	Malegaon	Amana	Amana-3	99, 102, 400, C-181	N 20.334456	E 77.074522
		35.60	0.03	1.07	Yavatmal	Washim	Malegaon	Amana	Tapovan	161, E-24, 25, 26, 27, 28, 29,	N 20.332939	E 77.070033
		20.80	0.03	0.62	Yavatmal	Washim	Malegaon	Kinhiraja	Kinhiraja-1	107, 108, E-41, 42, 43, 47,	N 20.342311	E 77.154208
		30.53	0.03	0.92	Yavatmal	Washim	Malegaon	Kinhiraja	Kawardari	104, 106, E-32, 33, 35, 36,	N 20.323119	E 77.118069
		24.60	0.03	0.74	Yavatmal	Washim	Malegaon	Kinhiraja	Kinhiraja-2	109, 110, E-52, 53, 54, 55,	N 20.358697	E 77.171436
		49.52	0.03	1.49	Yavatmal	Washim	Malegaon	Medshi	Medshi	52, E-99, 100, 101, 102, 103	N 20.339506	E 76 904208

Works proposed					Location of work						Latlong	
Rule No.	Item of work	Quantity	Rate	Amount (Rs. in Lakhs	Circle	Division	Range	Round	Beat	Compartment No	Longitude	Latitude
1	2	3	4	5	6	7	8	9	10	11	12	13
iv)	**Cutting & burning of fire lines (Km)**	20.00	0.03	0.60	Yavatmal	Washim	Malegaon	Medshi	Kolakamatha-1	47	N 20.30505	E 76 893994
		16.90	0.03	0.51	Yavatmal	Washim	Malegaon	Medshi	Kalakamtha-2	A-51, B-51	N 22.300694	E 76 901403
		16.69	0.03	0.50	Yavatmal	Washim	Malegaon	Medshi	Bhorad-2	35, E-108, 109, 112, 114,	N 20.288664	E 76 842311
		1.2	0.03	0.04	Yavatmal	Washim	Manora	Giroli	Hiwara		N 20° 18 38 97	E 77° 40 17 88
		1.15	0.03	0.03	Yavatmal	Washim	Manora	Giroli	Sawargaon		N 20° 22 96 21	E 77° 39 41 13
		2	0.03	0.06	Yavatmal	Washim	Manora	palodi	Shendurjana		N 20° 18 40 82	E 77° 40 14 81
		0.66	0.03	0.02	Yavatmal	Washim	Manora	giroli	Sawargaon kha.		N 20° 21 80 94	E 77° 34 42 54
		2	0.03	0.06	Yavatmal	Washim	Manora	giroli	Khapardari		N 20° 21 87 01	E 77° 39 23 61
		2	0.03	0.06	Yavatmal	Washim	Manora	giroli	Mendra-2		N 20° 11 82 07	E 77° 39 22 62
		0.4	0.03	0.01	Yavatmal	Washim	Manora	palodi	Palodi-1		N 20° 09 64 22	E 77° 47 45 02
		0.3	0.03	0.01	Yavatmal	Washim	Manora	palodi	Rui		N 20° 11 28 56	E 77° 44 43 68
		2	0.03	0.06	Yavatmal	Washim	Manora	palodi	Shendurjana		N 20° 13 84 22	E 77° 47 48 92
		2	0.03	0.06	Yavatmal	Washim	Manora	palodi	Rui		N 20° 09 77 01	E 77° 44 94 27
		0.326	0.03	0.01	Yavatmal	Washim	Manora	Manora	hatoli-1		N 20° 12 76 94	E 77° 50 95 20
		3	0.03	0.09	Yavatmal	Washim	Manora	Manora	hatoli -2		N 20° 09 58 90	E 77° 48 60 24
		1.4	0.03	0.04	Yavatmal	Washim	Manora	palodi	shendujana		N 20° 15 17 52	E 77° 42 84 99
		0.6	0.03	0.02	Yavatmal	Washim	Manora	palodi	Shendurjana		N 20° 12 66 64	E 77° 48 07 90
		0.56	0.03	0.02	Yavatmal	Washim	Manora	shendona	Ratanwadi		N 20° 11 10 45	E 77° 52 93 26
		0.65	0.03	0.02	Yavatmal	Washim	Manora	shendona	Ratawadi -1		N 20° 11 59 14	E 77° 53 54 62
		0.2	0.03	0.01	Yavatmal	Washim	Manora	Manora	Hatoli-1		N 20° 15 96 99	E 77° 54 33 89
		0.1	0.03	0.00	Yavatmal	Washim	Manora	Manora	Sawargaon		N 20° 25 58 94	E 77° 56 40 33
		0.56	0.03	0.02	Yavatmal	Washim	Manora	Manora	Sawargaon		N 20° 27 58 59	E 77° 56 21 93
		2.6	0.03	0.08	Yavatmal	Washim	Manora	Manora	Sawargaon		N 20° 24 72 31	E 77° 56 37 75

Works proposed					Location of work						Latlong	
Rule No.	Item of work	Quantity	Rate	Amount (Rs. in Lakhs	Circle	Division	Range	Round	Beat	Compartment No	Longitude	Latitude
1	2	3	4	5	6	7	8	9	10	11	12	13
iv)	**Cutting & burning of fire lines (Km)**	1.6	0.03	0.05	Yavatmal	Washim	Manora	Manora	poharadevi		N 20° 14 16 60	E 77° 62 07 59
		2.6	0.03	0.08	Yavatmal	Washim	Manora	Manora	poharadevi		N 20° 14 17 000	E 77° 62 07 59
		0.5	0.03	0.02	Yavatmal	Washim	Manora	Giroli	Bhildongar		N 20° 16 64 14	E 77° 43 45 53
		1.36	0.03	0.04	Yavatmal	Washim	Manora	palodi	Shendurajan		N 20° 15 50 19	E 77° 45 44 28
		1.22	0.03	0.04	Yavatmal	Washim	Manora	shendona	Fulumari		N 20° 07 91 62	E 77° 59 22 01
		1.3	0.03	0.04	Yavatmal	Washim	Manora	shendona	Shendona		N 20° 05 76 12	E 77° 59 33 10
		1.1	0.03	0.03	Yavatmal	Washim	Manora	Manora	Bhuli		N 20° 11 59 19	E 77° 60 35 85
		0.56	0.03	0.02	Yavatmal	Washim	Manora	Manora	Bhuli		N 20° 11 02 45	E 77° 56 98 17
		1.5	0.03	0.05	Yavatmal	Washim	Manora	Giroli	Giroli		N 20° 22 36 79	E 77° 38 6235
		1.50	0.03	0.05	Yavatmal	Washim	Karanja	Karanja	Kherda	404	N 20° 34.488	E 77° 24. 558
		0.56	0.03	0.02	Yavatmal	Washim	Karanja	Karanja	Kherda	405	N 20° 34. 305	E 77 °25. 163
		1.50	0.03	0.05	Yavatmal	Washim	Karanja	Karanja	Kherda	c-89	N 20° 34. 397	E 77° 23. 524
		1.56	0.03	0.05	Yavatmal	Washim	Karanja	Karanja	Kherda	C-90	N 20° 33. 697	E 77 °24. 515
		0.60	0.03	0.02	Yavatmal	Washim	Karanja	Karanja	Kherda	B-227	N 20° 34. 159	E 77° 29. 124
		0.80	0.03	0.02	Yavatmal	Washim	Karanja	Karanja	Belkhed	411 A	N 20° 40. 709	E 77° 33.722
		1.20	0.03	0.04	Yavatmal	Washim	Karanja	Karanja	Belkhed	411 A	N 20° 40. 591	E 77 °36. 508
		0.69	0.03	0.02	Yavatmal	Washim	Karanja	Karanja	Belkhed	414	N 20° 39. 834	E 77° 21. 905
		1.60	0.03	0.05	Yavatmal	Washim	Karanja	Karanja	Belkhed	412 A	N 20° 39. 564	E 77° 33. 875
		1.50	0.03	0.05	Yavatmal	Washim	Karanja	Karanja	Belkhed	412	N 20° 39. 868	E 77° 34. 320
		1.36	0.03	0.04	Yavatmal	Washim	Karanja	Karanja	Belkhed	409	N 20° 42. 510	E 77° 37. 162
		1.40	0.03	0.04	Yavatmal	Washim	Karanja	Karanja	Belkhed	410	N 20° 42. 640	E 77° 37. 837
		0.90	0.03	0.03	Yavatmal	Washim	Karanja	Karanja	Belkhed	197, 198, 199	N 20° 39. 404	E 77° 33. 384
		0.60	0.03	0.02	Yavatmal	Washim	Karanja	Karanja	Belkhed	203	N 20° 36. 918	E 77° 32. 188

Works proposed					Location of work						Latlong	
Rule No.	Item of work	Quantity	Rate	Amount (Rs. in Lakhs	Circle	Division	Range	Round	Beat	Compartment No	Longitude	Latitude
1	2	3	4	5	6	7	8	9	10	11	12	13
iv)	**Cutting & burning of fire lines (Km)**	1.25	0.03	0.04	Yavatmal	Washim	Karanja	Karanja	Belkhed	196	N 20° 39. 937	E 77° 35. 327
		2.56	0.03	0.08	Yavatmal	Washim	Karanja	Karanja	Belkhed	200	N 20° 38. 292	E 77° 39. 783
		1.63	0.03	0.05	Yavatmal	Washim	Karanja	Karanja	Belkhed	201, 202	N 20° 37. 879	E 77° 31. 837
		3.60	0.03	0.11	Yavatmal	Washim	Karanja	Mangrulpir	Wanoja	120, 121A	N 20° 24. 437	E 77° 12. 003
		1.69	0.03	0.05	Yavatmal	Washim	Karanja	Mangrulpir	Wanoja	C-170	N 20° 26. 351	E 77° 13.296
		1.65	0.03	0.05	Yavatmal	Washim	Karanja	Mangrulpir	Wanoja	C-171	N 20° 26. 769	E 77° 15.809
		0.69	0.03	0.02	Yavatmal	Washim	Karanja	Mangrulpir	Yedshi	116	N 20° 21. 952	E 77° 10.895
		1.658	0.03	0.05	Yavatmal	Washim	Karanja	Mangrulpir	Yedshi	136	N 20° 26. 348	E 77° 17. 216
		0.65	0.03	0.02	Yavatmal	Washim	Karanja	Mangrulpir	Yedshi	135	N 20° 26. 506	E 77° 16.281
		3.56	0.03	0.11	Yavatmal	Washim	Karanja	Mangrulpir	Yedshi	C-52	N 20° 26.596	E 77° 16. 238
		2.1	0.03	0.06	Yavatmal	Washim	Karanja	Mangrulpir	Kolambi	C-152	N 20° 14.513	E 77° 21.499
		1.6	0.03	0.05	Yavatmal	Washim	Karanja	Mangrulpir	Kolambi	C-153	N 20° 13. 091	E 77° 21. 922
		0.5	0.03	0.02	Yavatmal	Washim	Karanja	Mangrulpir	Kolambi	C-154	N 20° 14. 139	E 77° 22. 312
		1.5	0.03	0.05	Yavatmal	Washim	Karanja	Mangrulpir	Kolambi	C-155	N 20° 14. 510	E 77° 22. 011
		0.56	0.03	0.02	Yavatmal	Washim	Karanja	Mangrulpir	Kolambi	C-156	N 20° 15. 254	E 77° 22. 194
		0.6	0.03	0.02	Yavatmal	Washim	Karanja	Mangrulpir	Kolambi	C-157	N 20° 15. 098	E 77° 21. 545
		0.56	0.03	0.02	Yavatmal	Washim	Karanja	Mangrulpir	Kolambi	430	N 20° 20. 050	E 77° 22. 228
		0.78	0.03	0.02	Yavatmal	Washim	Karanja	Mangrulpir	Kolambi	431	N 20° 19. 892	E 77 21. 764
		0.564	0.03	0.02	Yavatmal	Washim	Karanja	Mangrulpir	Kolambi	433	N 20° 15. 453	E 77° 19. 975
		0.963	0.03	0.03	Yavatmal	Washim	Karanja	Mangrulpir	Kolambi	434	N 20° 14.139	E 77° 19. 689
		1.65	0.03	0.05	Yavatmal	Washim	Karanja	Mangrulpir	Kasola	137	N 20° 12. 975	E 77° 16. 804
		1.5	0.03	0.05	Yavatmal	Washim	Karanja	Mangrulpir	Kasola	C-217	N 20° 14. 933	E 77° 17. 224
		1.3	0.03	0.04	Yavatmal	Washim	Karanja	Mangrulpir	Kasola	143	N 20° 09. 8858	E 77° 36. 52.82

Works proposed					Location of work						Latlong	
Rule No.	Item of work	Quantity	Rate	Amount (Rs. in Lakhs	Circle	Division	Range	Round	Beat	Compartment No	Longitude	Latitude
1	2	3	4	5	6	7	8	9	10	11	12	13
iv)	**Cutting & burning of fire lines (Km)**	0.5	0.03	0.02	Yavatmal	Washim	Karanja	Karanja	kajleshwar	C-273	N 20° 31.52 07	E 77° 27. 34. 21
		1.3	0.03	0.04	Yavatmal	Washim	Karanja	Karanja	kajleshwar	C-95	N 20° 32. 06 89	E 77° 26. 10. 70
		0.6	0.03	0.02	Yavatmal	Washim	Karanja	Karanja	kajleshwar	B-219	N 20° 32. 12 22	E 77° 25. 27. 01
		0.6	0.03	0.02	Yavatmal	Washim	Karanja	Karanja	kajleshwar	B 213	N 20° 33. 01 14	E 77° 24 .09. 15
		1.2	0.03	0.04	Yavatmal	Washim	Karanja	Karanja	kajleshwar	B-214	N 20° 32. 55 94	E 77° 24 .10. 77
		1.1	0.03	0.03	Yavatmal	Washim	Karanja	Karanja	kajleshwar	B-215	N 20° 33. 10 66	E 77° 24 .00. 54
		1.6	0.03	0.05	Yavatmal	Washim	Karanja	Karanja	kajleshwar	B-216	N 20° 32. 10 66	E 77° 24 .00. 54
		1.5	0.03	0.05	Yavatmal	Washim	Karanja	Karanja	kajleshwar	B-217	N 20° 32. 55 92	E 77° 24. 09. 24
		0.99	0.03	0.03	Yavatmal	Washim	Karanja	Karanja	kajleshwar	B-218	N 20° 32. 56 67	E 77° 24. 11. 64
		2.1	0.03	0.06	Yavatmal	Washim	Karanja	Karanja	kajleshwar	B 220	N 20° 32. 25 00	E 77° 23. 17. 94
		2.5	0.03	0.08	Yavatmal	Washim	Karanja	Karanja	kajleshwar	B 221	N 20° 32. 15 82	E 77° 23.12. 60
		1.6	0.03	0.05	Yavatmal	Washim	Karanja	Karanja	kajleshwar	B 222	N 20° 32. 24 69	E 77° 23. 18. 88
		1	0.03	0.03	Yavatmal	Washim	Karanja	Karanja	kajleshwar	B 223	N 20° 31. 42 82	E 77° 24. 07. 75
		3.5	0.03	0.11	Yavatmal	Washim	Karanja	Karanja	kajleshwar	B 224	N 20° 31. 22 93	E 77° 24. 19. 94
		0.4	0.03	0.01	Yavatmal	Washim	Karanja	Karanja	kajleshwar	B 225	N 20° 31. 20° 96	E 77° 24. 25. 89
		1	0.03	0.03	Yavatmal	Washim	Karanja	Karanja	kajleshwar	B 226	N 20° 31. 22 02	E 77° 24. 25. 15
		0.5	0.03	0.02	Yavatmal	Washim	Karanja	Karanja	kajleshwar	C 93	N 20° 32. 57 80	E 77° 25. 11. 51
		0.6	0.03	0.02	Yavatmal	Washim	Karanja	Karanja	kajleshwar	C 94	N 20° 32. 53 82	E 77° 25. 02. 49
		2.5	0.03	0.08	Yavatmal	Washim	Karanja	Karanja	kajleshwar	418	N 20° 33. 13 24	E 77° 33. 13. 24
		0.6	0.03	0.02	Yavatmal	Washim	Karanja	Karanja	kajleshwar	C 88	N 20° 34. 53 19	E 77° 22. 41. 99
		0.1	0.03	0.00	Yavatmal	Washim	Karanja	Karanja	Zodga	C-115	N 20° 30. 165	E 77° 33. 101
		0.6	0.03	0.02	Yavatmal	Washim	Karanja	Karanja	Zodga	B247 to B250	N 20° 49. 6922	E 77° 54. 9052
		0.2	0.03	0.01	Yavatmal	Washim	Karanja	Karanja	Zodga	413	N 20° 58. 4078	E 77° 60. 0937

Works proposed					Location of work						Latlong	
Rule No.	Item of work	Quantity	Rate	Amount (Rs. in Lakhs	Circle	Division	Range	Round	Beat	Compartment No	Longitude	Latitude
1	2	3	4	5	6	7	8	9	10	11	12	13
iv)	**Cutting & burning of fire lines (Km)**	1	0.03	0.03	Yavatmal	Washim	Karanja	Karanja	Zodga	240 T0 246	N 20° 51. 3749	E 77° 53. 9407
		0.6	0.03	0.02	Yavatmal	Washim	Karanja	Karanja	Zodga	B 238	N 20° 50. 778	E 77° 58. 869
		0.36	0.03	0.01	Yavatmal	Washim	Karanja	Karanja	Zodga	B 239	N 20° 50. 1870	E 77° 58. 6383
		0.46	0.03	0.01	Yavatmal	Washim	Karanja	Karanja	Zodga	B 235	N 20° 54. 231	E 77° 62. 145
		0.6	0.03	0.02	Yavatmal	Washim	Karanja	Karanja	Zodga	B 236	N 20° 51. 797	E 77° 64. 948
		1	0.03	0.03	Yavatmal	Washim	Karanja	Karanja	Zodga	416	N 20° 57. 1000	E 77° 53. 6415
		0.6	0.03	0.02	Yavatmal	Washim	Karanja	Karanja	Zodga	417	N 20° 56. 728	E 77° 52. 073
		0.963	0.03	0.03	Yavatmal	Washim	Karanja	Karanja	Zodga	415	N 20° 58. 439	E 77° 56. 6060
		1	0.03	0.03	Yavatmal	Washim	Karanja	Karanja	Zodga	B 231	N 20° 56. 268	E 77° 55. 508
		0.66	0.03	0.02	Yavatmal	Washim	Karanja	Karanja	Zodga	423	N 20° 53.382	E 7 5°51. 370
		3.93	0.03	0.12	Yavatmal	Washim	Washim	Washim	Shirputi1	E64	N 19 59 056	E 77 09 049 E
		5.00	0.03	0.15	Yavatmal	Washim	Washim	Washim	Shirputi1	E63	N 20 03 006	E 077 09 043
		6.60	0.03	0.20	Yavatmal	Washim	Washim	Washim	Shirputi1	C180	N 20 02 001	E 77 10 017
		9.30	0.03	0.28	Yavatmal	Washim	Washim	Washim	Shirputi1	C179	N 20 01 006	E 077 11 021
		7.50	0.03	0.23	Yavatmal	Washim	Washim	Washim	Shirputi1	402	N 20 01 059	E 077 11 007
		9.00	0.03	0.27	Yavatmal	Washim	Washim	Washim	Shirputi1	E66	N 20 00 028	E 077 11 018
		8.00	0.03	0.24	Yavatmal	Washim	Washim	Washim	Shirputi1	E62	N 20 02 042	E 077 11 037
		3.70	0.03	0.11	Yavatmal	Washim	Washim	Washim	Shirputi1	401	N 20 03 028	E 077 06 007
		7.30	0.03	0.22	Yavatmal	Washim	Washim	Washim	Shirputi2	C177	N 19 57 055	E 077 16 020
		5.00	0.03	0.15	Yavatmal	Washim	Washim	Washim	Shirputi2	E71	N 19 59 050	E 077 13 047
		1.00	0.03	0.03	Yavatmal	Washim	Washim	Washim	Shirputi2	E72	N 19 59 008	E 077 13 040
		1.30	0.03	0.04	Yavatmal	Washim	Washim	Washim	Shirputi2	E73	N 19 58 051	E 077 13 018
		2.50	0.03	0.08	Yavatmal	Washim	Washim	Washim	Shirputi2	E74	N 19 59 014	E 077 12 044

Works proposed					Location of work						Latlong	
Rule No.	Item of work	Quantity	Rate	Amount (Rs. in Lakhs	Circle	Division	Range	Round	Beat	Compartment No	Longitude	Latitude
1	2	3	4	5	6	7	8	9	10	11	12	13
iv)	**Cutting & burning of fire lines (Km)**	2.00	0.03	0.06	Yavatmal	Washim	Washim	Washim	Shirputi2	E75	N 20 00 014	E 077 13 016
		4.70	0.03	0.14	Yavatmal	Washim	Washim	Washim	Shirputi2	E76	N 19 58 031	E 077 15 005
		0.50	0.03	0.02	Yavatmal	Washim	Washim	Washim	Shirputi2	E77	N 19 58 009	E 077 14 051
		0.50	0.03	0.02	Yavatmal	Washim	Washim	Washim	Shirputi2	E78	N 19 58 003	E 077 15 012
		1.20	0.03	0.04	Yavatmal	Washim	Washim	Washim	Shirputi2	E79	N 19 57 026	E 077 15 011
		2.20	0.03	0.07	Yavatmal	Washim	Washim	Washim	Shirputi2	E80	N 20 00 037	E 077 14 038
		1.50	0.03	0.05	Yavatmal	Washim	Washim	Washim	Shirputi2	E81	N 19 59 057	E 077 14 057
		6.00	0.03	0.18	Yavatmal	Washim	Washim	Washim	Shirputi2	E82	N 19 59 011	E 077 16 003
		0.50	0.03	0.02	Yavatmal	Washim	Washim	Washim	Shirputi2	E83	N 19 59 054	E 077 16 053
		3.00	0.03	0.09	Yavatmal	Washim	Washim	Washim	Shirputi2	158	N 19 59 058	E 077 14 028
		6.00	0.03	0.18	Yavatmal	Washim	Washim	Washim	Shirputi2	C107	N 19 58 012	E 077 15 033
		6.30	0.03	0.19	Yavatmal	Washim	Washim	Washim	Shirputi2	C175	N 19 57 031	E 077 17 055
		1.00	0.03	0.03	Yavatmal	Washim	Washim	Washim	Shirputi2	C176	N 19 57 024	E 077 17 054
		0.50	0.03	0.02	Yavatmal	Washim	Washim	Washim	Shirputi2	E68	N 20 02 032	E 077 13 030
		2.80	0.03	0.08	Yavatmal	Washim	Washim	Washim	Shirputi2	159	N 20 02 005	E 077 12 041
		4.70	0.03	0.14	Yavatmal	Washim	Washim	Washim	Shirputi2	C177	N 19 57 054	E 077 16 018
		5.50	0.03	0.17	Yavatmal	Washim	Washim	Washim	Shirputi2	E67	N 20 02 003	E 077 12 044
		4.60	0.03	0.14	Yavatmal	Washim	Washim	Washim	Shirputi2	E178	N 20 00 041	E 077 14 000
		7.00	0.03	0.21	Yavatmal	Washim	Washim	Washim	Shirputi2	E70	N 20 02 012	E 077 14 013
		8.00	0.03	0.24	Yavatmal	Washim	Washim	Washim	Tornala	E160	N 20 12 016	E 077 09 036E
		7.00	0.03	0.21	Yavatmal	Washim	Washim	Washim	Tornala	E218	N 20 12 015	E 077 09 039
		5.50	0.03	0.17	Yavatmal	Washim	Washim	Washim	Tornala	711	N 20 14 012	E 077 14 005
		6.50	0.03	0.20	Yavatmal	Washim	Washim	Washim	Tornala	E47	N 20 11 044	E 077 11 015

Works proposed					Location of work						Latlong	
Rule No.	Item of work	Quantity	Rate	Amount (Rs. in Lakhs	Circle	Division	Range	Round	Beat	Compartment No	Longitude	Latitude
1	2	3	4	5	6	7	8	9	10	11	12	13
iv)	**Cutting & burning of fire lines (Km)**	6.00	0.03	0.18	Yavatmal	Washim	Washim	Washim	Tornala	E48	N 20 15 029	E 077 09 042
		1.00	0.03	0.03	Yavatmal	Washim	Washim	Washim	Tornala	E49	N 20 15 024	E 077 09 030
		0.80	0.03	0.02	Yavatmal	Washim	Washim	Washim	Tornala	E50	N 20 15 031	E 077 08 011
		5.00	0.03	0.15	Yavatmal	Washim	Washim	Washim	Tornala	E51	N 20 13 008	E 077 08 050
		2.30	0.03	0.07	Yavatmal	Washim	Washim	Washim	Tornala	E57	N 20 14 011	E 077 10 001
		0.60	0.03	0.02	Yavatmal	Washim	Washim	Washim	Tornala	E58	N 20 11 038	E 077 09 028
		1.90	0.03	0.06	Yavatmal	Washim	Washim	Washim	Tornala	E59	N 20 10 031	E 077 07 030
		5.00	0.03	0.15	Yavatmal	Washim	Washim	Washim	Tornala	E60	N 20 10 01	E 077 07 026
		7.00	0.03	0.21	Yavatmal	Washim	Washim	Washim	Tornala	E61	N 20 10 000	E 077 07 005
		5.00	0.03	0.15	Yavatmal	Washim	Washim	Washim	Tornala	E52	N 20 11 007	E 077 07 024
		3.00	0.03	0.09	Yavatmal	Washim	Washim	Washim	Tornala	E53	N 20 15 014	E 077 11 008
		1.00	0.03	0.03	Yavatmal	Washim	Washim	Washim	Tornala	E54	N 20 14 048	E 077 11 040
		3.00	0.03	0.09	Yavatmal	Washim	Washim	Washim	Tornala	E55	N 20 14 033	E 077 11 059
		3.00	0.03	0.10	Yavatmal	Washim	Washim	Washim	Tornala	E56	N 20 14 028	E 077 10 047
		4.00	0.03	0.12	Yavatmal	Washim	Washim	Washim	Ansing	E91	N 20 03 018	E 077 21 041
		3.40	0.03	0.10	Yavatmal	Washim	Washim	Washim	Ansing	155	N 20 02 031	E 077 22 000
		7.50	0.03	0.23	Yavatmal	Washim	Washim	Washim	Ansing	156	N 20 01 033	E 077 21 017
		7.00	0.03	0.21	Yavatmal	Washim	Washim	Washim	Ansing	E190	N 20 01 056	E 077 20 032
		0.90	0.03	0.03	Yavatmal	Washim	Washim	Washim	Ansing	E89	N 20 00 039	E 077 20 033
		1.20	0.03	0.04	Yavatmal	Washim	Washim	Washim	Ansing	E84	N 19 58 050	E 077 17 039
		4.50	0.03	0.14	Yavatmal	Washim	Washim	Washim	Ansing	E85	N 19 59 035	E 077 18 019
		7.80	0.03	0.23	Yavatmal	Washim	Washim	Washim	Ansing	E86	N 19 58 002	E 077 19 022
		3.00	0.03	0.09	Yavatmal	Washim	Washim	Washim	Ansing	E87	N 19 58 056	E 077 17 005

Works proposed					Location of work						Latlong	
Rule No.	**Item of work**	**Quantity**	**Rate**	**Amount (Rs. in Lakhs**	**Circle**	**Division**	**Range**	**Round**	**Beat**	**Compartment No**	**Longitude**	**Latitude**
1	**2**	**3**	**4**	**5**	**6**	**7**	**8**	**9**	**10**	**11**	**12**	**13**
	Cutting & burning of fire lines (Km)	2.00	0.03	0.06	Yavatmal	Washim	Washim	Washim	Ansing	E88	N 19 58 057	E 077 19 032
		5.00	0.03	0.15	Yavatmal	Washim	Washim	Washim	Ansing	157	N 19 58 020	E 077 18 026
		9.40	0.03	0.30	Yavatmal	Washim	Washim	Risod	Mohja 1	209	N 19 52 026	E 076 41 020
		4.20	0.03	0.13	Yavatmal	Washim	Washim	Risod	Mohja-2	C187	N 19 58 017	E 076 45 048
		3.20	0.03	0.10	Yavatmal	Washim	Washim	Risod	Mohja-2	E92	N 19 54 056	E 076 42 006
		5.00	0.03	0.15	Yavatmal	Washim	Washim	Risod	Mohja-2	212	N 19 55 022	E 076 41 021
		7.50	0.03	0.23	Yavatmal	Washim	Washim	Risod	LONI	210	N 19 52 023	E 076 39 027
		4.20	0.03	0.13	Yavatmal	Washim	Washim	Risod	LONI	211	N 19 54 033	E 076 39 024
		900.00		**27.03**								
		1932.72		**60.00**								
ii	Fire watchers	**3.00**		3.50	Yavatmal	Yavatmal	Ner	-	-	71		
		1	-	1.15	Yavatmal	PKD	PKD	PKD	PKD	6,45,446		
		1	-	1.15	Yavatmal	PKD	PKD	PKD	PKD	68		
		1	-	1.15	Yavatmal	PKD	PKD	PKD	Tiwsala	74		
		1	-	1.15	Yavatmal	PKD	PKD	PKD	Sunna	104A,104B		
		1	-	1.15	Yavatmal	PKD	PKD	Patanbori	Patanbori	97,100,		
		1	-	1.15	Yavatmal	PKD	PKD	Patapangra	Patapangra	177		
		1	-	1.15	Yavatmal	PKD	Parwa	Patapangra	Patapangra-2	178		
		1	-	1.15	Yavatmal	PKD	Parwa	Patapangra	Zotala	164		
		1	-	1.15	Yavatmal	PKD	Parwa	Parwa	parwa	c610,c611		
		1	-	1.15	Yavatmal	PKD	Parwa	Kurli	bilayata	1,80,181		
		117 Fire watchers for 4 Months	14040	45.00	Yavatmal	Pusad	Pusad	All Round	All beat	-		
					Yavatmal	Pusad	Umarkhed	All Round	All beat	-		
					Yavatmal	Pusad	Shambilpampri	All Round	All beat	-		
					Yavatmal	Pusad	Marwade	All Round	All beat	-		
					Yavatmal	Pusad	Digras	All Round	All beat	-		
					Yavatmal	Pusad	Kali	All Round	All beat	-		
		13.00		**60.00**								
	Total Forest fire prevention and control operations	**1945.72**		**120.00**								

Works proposed					Location of work						Latlong	
Rule No.	Item of work	Quantity	Rate	Amount (Rs. in Lakhs	Circle	Division	Range	Round	Beat	Compartment No	Longitude	Latitude
1	2	3	4	5	6	7	8	9	10	11	12	13
5(2)(g)	Soil and moisture conservation works in the forest											
i)	Construction of Gabiyan Bandhara	1	0.50	0.50	Yavatmal	Yavatmal	Wadgaon D	Wadgaon D	Sukali	376	N-20.24.74	E-78.29.63
		1	0.50	0.50	Yavatmal	Yavatmal	Wadgaon D	Wadgaon D	Sukali	376	N-20.24.74	E-78.29.63
		1	0.50	0.50	Yavatmal	Yavatmal	Wadgaon D	Wadgaon D	Sukali	376	N-20.24.74	E-78.29.63
		1	0.50	0.50	Yavatmal	Yavatmal	Wadgaon D	Yelabara	Waki	213	N-20.22.51	E-78.34.40
		1	0.50	0.50	Yavatmal	Yavatmal	Wadgaon D	Yelabara	Waki	213	N-20.22.51	E-78.34.40
		1	0.50	0.50	Yavatmal	Yavatmal	Wadgaon D	Yelabara	Waki	213	N-20.22.51	E-78.34.40
		1	0.50	0.50	Yavatmal	Yavatmal	Hiwari	Hiwari	Hiwari	310	N-20.16.05	E-78.01.01
		1	0.50	0.50	Yavatmal	Yavatmal	Hiwari	Hiwari	Hiwari	302	N-20.16.05	E-78.01.01
		1	0.50	0.50	Yavatmal	Yavatmal	Hiwari	Hiwari	Hiwari	302	N-20.16.04	E-78.01.02
		1	0.50	0.50	Yavatmal	Yavatmal	Hiwari	Hiwari	Saykheda	254	N-20.11.04	E-78.00.45
		1	0.50	0.50	Yavatmal	Yavatmal	Hiwari	Hiwari	Saykheda	254	N-20.16.16	E-78.06.33
		1	0.50	0.50	Yavatmal	Yavatmal	Hiwari	Hiwari	Saykheda	254	N-20.11.07	E-78.06.34
		1	0.50	0.50	Yavatmal	Yavatmal	Jodmoha	Chaparda	Mendhala	352	N-20.24.57	E-78.13.59
		1	0.50	0.50	Yavatmal	Yavatmal	Jodmoha	Chaparda	Mendhala	352	N-20.24.57	E-78.13.59
		1	0.50	0.50	Yavatmal	Yavatmal	Jodmoha	Chaparda	Mendhala	352	N-20.24.57	E-78.13.59
		1	0.50	0.50	Yavatmal	Yavatmal	Jodmoha	Jodmoha	Watbori	374	N-20.17.46	E-78.21.08
		1	0.50	0.50	Yavatmal	Yavatmal	Jodmoha	Jodmoha	Watbori	374	N-20.17.46	E-78.21.08
		1	0.50	0.50	Yavatmal	Yavatmal	Jodmoha	Jodmoha	Watbori	374	N-20.17.46	E-78.21.08
		1	0.50	0.50	Yavatmal	Yavatmal	Jodmoha	Jodmoha	Sonkhas Heti	326	N-20.17.37	E-78.19026
		1	0.50	0.50	Yavatmal	Yavatmal	Jodmoha	Jodmoha	Sonkhas Heti	326	N-20.17.37	E-78.19026
		1	0.50	0.50	Yavatmal	Yavatmal	Jodmoha	Jodmoha	Sonkhas Heti	326	N-20.17.37	E-78.19026
		1	0.50	0.50	Yavatmal	Yavatmal	Jodmoha	Jodmoha	Vithalwadi	325	N-20.17.26	E-78.19550
		1	0.50	0.50	Yavatmal	Yavatmal	Jodmoha	Jodmoha	Vithalwadi	325	N-20.17.26	E-78.19550
		1	0.50	0.50	Yavatmal	Yavatmal	Jodmoha	Jodmoha	Vithalwadi	325	N-20.17.26	E-78.19550
		1	0.50	0.50	Yavatmal	Yavatmal	Jodmoha	Potghavan	Durg	340	N-20.37116	E-78.36260

Works proposed					Location of work						Latlong	
Rule No.	Item of work	Quantity	Rate	Amount (Rs. in Lakhs	Circle	Division	Range	Round	Beat	Compartment No	Longitude	Latitude
1	2	3	4	5	6	7	8	9	10	11	12	13
i)	Construction of Gabiyan Bandhara	1	0.50	0.50	Yavatmal	Yavatmal	Jodmoha	Potghavan	Durg	340	N-20.37116	E-78.36260
		1	0.50	0.50	Yavatmal	Yavatmal	Jodmoha	Potghavan	Durg	340	N-20.37116	E-78.36260
		1	0.50	0.50	Yavatmal	Yavatmal	Jodmoha	Potghavan	Rajur	345	N-20.24004	E-78.2319
		1	0.50	0.50	Yavatmal	Yavatmal	Jodmoha	Potghavan	Rajur	345	N-20.24004	E-78.2319
		1	0.50	0.50	Yavatmal	Yavatmal	Jodmoha	Potghavan	Rajur	345	N-20.24004	E-78.2319
		1	0.50	0.50	Yavatmal	Yavatmal	Jodmoha	Potghavan	Potghavan	344	N-20.3689	E-78.4096
		1	0.50	0.50	Yavatmal	Yavatmal	Jodmoha	Potghavan	Potghavan	344	N-20.3689	E-78.4096
		1	0.50	0.50	Yavatmal	Yavatmal	Jodmoha	Potghavan	Potghavan	344	N-20.3689	E-78.4096
		1	0.50	0.50	Yavatmal	Yavatmal	Jodmoha	Metkhada	Pahur	217	N-20.2750	E-78.3605
		1	0.50	0.50	Yavatmal	Yavatmal	Jodmoha	Metkhada	Pahur	217	N-20.2750	E-78.3605
		1	0.50	0.50	Yavatmal	Yavatmal	Jodmoha	Metkhada	Pahur	217	N-20.2750	E-78.3605
		1	0.50	0.50	Yavatmal	Yavatmal	Jodmoha	Metkhada	Sonkhas	218	N-20.2497	E-78.2560
		1	0.50	0.50	Yavatmal	Yavatmal	Jodmoha	Metkhada	Sonkhas	218	N-20.2497	E-78.2560
		1	0.50	0.50	Yavatmal	Yavatmal	Jodmoha	Metkhada	Sonkhas	218	N-20.2497	E-78.2560
		1	0.50	0.50	Yavatmal	Yavatmal	Jodmoha	Metikhida	Markanda	212	N-20.1240	E-78.2210
		1	0.50	0.50	Yavatmal	Yavatmal	Jodmoha	Metikhida	Markanda	212	N-20.1240	E-78.2210
		1	0.50	0.50	Yavatmal	Yavatmal	Jodmoha	Metikhida	Markanda	212	N-20.1240	E-78.2210
		1	0.50	0.50	Yavatmal	Yavatmal	Darwha	Lohi	Lihi	450	N-20.2650	E-77.3627
		1	0.50	0.50	Yavatmal	Yavatmal	Darwha	Lohi	Lihi	450	N-20.2654	E-77.3622
		1	0.50	0.50	Yavatmal	Yavatmal	Darwha	Lohi	Lihi	450	N-20.2657	E-77.3648
		1	0.50	0.50	Yavatmal	Yavatmal	Yavatmal	Waghapur	Kita	469	N-20°26'11.75"	E-078°05'39.75"
		1	0.50	0.50	Yavatmal	Yavatmal	Yavatmal	Waghapur	Kita	469	N-20°26'12.44"	E-078°05'39.23"
		1	0.50	0.50	Yavatmal	Yavatmal	Yavatmal	Waghapur	Kita	469	N-20°26'12.81"	E-078°05'36.78"
		1	0.50	0.50	Yavatmal	Yavatmal	Yavatmal	Waghapur	Waghapur	467	N-20°24'7.81"	E-078°05'5.71"
		1	0.50	0.50	Yavatmal	Yavatmal	Yavatmal	Waghapur	Waghapur	467	N-20°24'7.97"	E-078°05'5.52"
	Total Yavatmal Div Gabian	**50**		**25.00**								
i)	Construction of Gabiyan Bandhara	20	0.50	10.00	YTL	PKD	Parwa	Parwa	Kinhi	87,88	N 20.119	E78 2354
		20	0.50	10.00	YTL	PKD	Parwa	Parwa	Jamb	649A, 649B	N 19.989643	E78.413455
	Total Yavatmal Div Gabian	**40**		**20.00**								

Works proposed					Location of work						Latlong	
Rule No.	Item of work	Quantity	Rate	Amount (Rs. in Lakhs	Circle	Division	Range	Round	Beat	Compartment No	Longitude	Latitude
1	2	3	4	5	6	7	8	9	10	11	12	13
i)	Construction of Gabiyan Bandhara	5	0.50	2.50	Yavatmal	Pusad	Digras	Digras	Rohana	806	N-20.03.54	E-77.38.33
		5	0.50	2.50	Yavatmal	Pusad	Digras	Singed	Singad	344	N-20.02.30	E-77.66.03
		4	0.50	2.00	Yavatmal	Pusad	Pusad	Pusad	Pusad	826	N-19.94.72	E-77.62.42
		4	0.50	2.00	Yavatmal	Pusad	Pusad	Chondi	Mokhad	370	N-20.03.24	E-77.49.14
		4	0.50	2.00	Yavatmal	Pusad	Umarkhed	Krishnapur	Vidul-1	460	N-19.35	E-77.49.07
		4	0.50	2.00	Yavatmal	Pusad	Umarkhed	Krishnapur	Pardi	455	N-19.37	E-77.49.09
		4	0.50	2.00	Yavatmal	Pusad	Shambilpampri	shilona	shilona	418	N 19.48.57	E 77.38.20
		4	0.50	2.00	Yavatmal	Pusad	Shambilpampri	shilona	Khadkdari	842	N 19.41.13	E 77.50.15
		4	0.50	2.00	Yavatmal	Pusad	Kali	Kali	Tiwaring	13	N 19.55.98	E 77.42.70
		4	0.50	2.00	Yavatmal	Pusad	Kali	kali	Ghonsara	795	N 20.03.34	E 77.38.10
		4	0.50	2.00	Yavatmal	Pusad	Marwadi	Marwadi	Hanwtkheda	387	N-19.57.52	E-77.23.24
		4	0.50	2.00	Yavatmal	Pusad	Marwadi	Marwadi	Marwadi B	391	N-19.55.44	E-77.23.45
		50.00	**Total**	**25.00**								
		1.00	0.50	0.50	Yavatmal	Washim	Karanja	Mangrulpir	Kasola	C-137	N-20.13.257	E-077.16.483
		1.00	0.50	0.50	Yavatmal	Washim	Karanja	Mangrulpir	Kasola	C-137	N-20.13.338	E-077.16.440
		1.00	0.50	0.50	Yavatmal	Washim	Karanja	Mangrulpir	Kasola	C-137	N-20.13.356	E-077.16.260
		1.00	0.50	0.50	Yavatmal	Washim	Malegaon	Kinhiraja	Kinhiraja-2	109	N-20.20.55	E-77.9.33
		1.00	0.50	0.50	Yavatmal	Washim	Malegaon	Kinhiraja	Kinhiraja-2	109	N-20.20.57	E-77.9.80
		1.00	0.50	0.50	Yavatmal	Washim	Malegaon	Kinhiraja	Kinhiraja-2	110	N-20.21.45	E-77.9.51
		1.00	0.50	0.50	Yavatmal	Washim	Malegaon	Kinhiraja	Kinhiraja-2	110	N-20.21.44	E-77.9.51
		1.00	0.50	0.50	Yavatmal	Washim	Malegaon	Pangara	Devthana-2	92	N-20.22.235	E-77.02.776
		1.00	0.50	0.50	Yavatmal	Washim	Malegaon	Pangara	Devthana-2	92	N-20.22.227	E-77.02.775
		1.00	0.50	0.50	Yavatmal	Washim	Malegaon	Pangara	Devthana-2	92	N-20.22.236	E-77.02.737
		1.00	0.50	0.50	Yavatmal	Washim	Manora	Giroli	Mendra-1	154	$N20^0$6'55"	$E77^0$24'23"
		1.00	0.50	0.50	Yavatmal	Washim	Manora	Giroli	Mendra-1	154	$N20^0$6'55"	$E77^0$24'23"
		1.00	0.50	0.50	Yavatmal	Washim	Manora	Giroli	Mendra-1	154	$N20^0$6'55"	$E77^0$24'23"
		1.00	0.50	0.50	Yavatmal	Washim	Manora	Giroli	Bhildongar	141	$N20^0$193'138"	$E77^0$42'87"
		1.00	0.50	0.50	Yavatmal	Washim	Manora	Giroli	Bhildongar	141	$N20^0$193'138"	$E77^0$42'87"
		1.00	0.50	0.50	Yavatmal	Washim	Manora	Giroli	Bhildongar	141	$N20^0$193'138"	$E77^0$42'87"
		1.00	0.50	0.50	Yavatmal	Washim	Manora	Palodi	Palodi-1	149	$N20^0$05'641"	$E77^0$29'497"
		1.00	0.50	0.50	Yavatmal	Washim	Manora	Palodi	Palodi-1	149	$N20^0$05'641"	$E77^0$29'497"
		1.00	0.50	0.50	Yavatmal	Washim	Manora	Palodi	Palodi-1	149	$N20^0$05'641"	$E77^0$29'497"
		1.00	0.50	0.50	Yavatmal	Washim	Manora	Palodi	Palodi-1	148	N $20^0$05'604"	$E77^0$28'729"

Works proposed					Location of work						Latlong	
Rule No.	Item of work	Quantity	Rate	Amount (Rs. in Lakhs	Circle	Division	Range	Round	Beat	Compartment No	Longitude	Latitude
1	2	3	4	5	6	7	8	9	10	11	12	13
i)	Construction of Gabiyan Bandhara	1.00	0.50	0.50	Yavatmal	Washim	Manora	Palodi	Palodi-1	148	N $20^0$05'604"	E$77^0$28'729"
		1.00	0.50	0.50	Yavatmal	Washim	Manora	Palodi	Palodi-1	148	N $20^0$05'604"	E$77^0$28'729"
		1.00	0.50	0.50	Yavatmal	Washim	Manora	Palodi	Shendurjana	C-142 A	N$20^0$9' 29"	E$77^0$2'85"
		1.00	0.50	0.50	Yavatmal	Washim	Manora	Palodi	Shendurjana	C-142 A	N$20^0$9' 29"	E$77^0$2'85"
		1.00	0.50	0.50	Yavatmal	Washim	Manora	Palodi	Shendurjana	C-142 A	N$20^0$9' 29"	E$77^0$2'85"
		1.00	0.50	0.50	Yavatmal	Washim	Manora	Palodi	Shendurjana	C-142 B	N$20^0$6' 48"	E$77^0$29'97"
		1.00	0.50	0.50	Yavatmal	Washim	Manora	Palodi	Shendurjana	C-142 B	N$20^0$6' 48"	E$77^0$29'97"
		1.00	0.50	0.50	Yavatmal	Washim	Manora	Palodi	Shendurjana	C-142 B	N$20^0$6' 48"	E$77^0$29'97"
		1.00	0.50	0.50	Yavatmal	Washim	Manora	Manora	Sawargaon (T)	C-102	N$20^0$16'26.91"	E$77^0$34'05.42"
		1.00	0.50	0.50	Yavatmal	Washim	Manora	Manora	Sawargaon (T)	C- 102	N$20^0$16'24.23"	E$77^0$34'05.71"
		1.00	0.50	0.50	Yavatmal	Washim	Manora	Manora	Sawargaon (T)	C- 102	N$20^0$16'20.86"	E$77^0$34'05.54"
		1.00	0.50	0.50	Yavatmal	Washim	Manora	Manora	Sawargaon (T)	C- 134	N$20^0$15'07.74"	E$77^0$35'35.10"
		1.00	0.50	0.50	Yavatmal	Washim	Manora	Manora	Sawargaon (T)	C- 134	N$20^0$15'03.37"	E$77^0$35'35.10"
		1.00	0.50	0.50	Yavatmal	Washim	Manora	Manora	Sawargaon (T)	C- 134	N$20^0$15'15.62"	E$77^0$35'16.16"
		1.00	0.50	0.50	Yavatmal	Washim	Manora	Manora	Pohradevi	435	N $20^0$13'07.88"	E$77^0$61'48.42"
		1.00	0.50	0.50	Yavatmal	Washim	Manora	Manora	Pohradevi	435	N $20^0$13'07.88"	E$77^0$61'48.42"
		1.00	0.50	0.50	Yavatmal	Washim	Manora	Manora	Pohradevi	435	N $20^0$13'07.88"	E$77^0$61'48.42"
		1.00	0.50	0.50	Yavatmal	Washim	Manora	Manora	Pohradevi	C-160	N $22^0$11.955 "	E$77^0$63'21.37"
		1.00	0.50	0.50	Yavatmal	Washim	Manora	Manora	Pohradevi	C-160	N $22^0$11.955 "	E$77^0$63'21.37"
		1.00	0.50	0.50	Yavatmal	Washim	Manora	Manora	Pohradevi	C-160	N $22^0$11.955 "	E$77^0$63'21.37"
		1.00	0.50	0.50	Yavatmal	Washim	Manora	Manora	Hatoli	B-143	N $20^0$08.941 "	E$77^0$30'641"
		1.00	0.50	0.50	Yavatmal	Washim	Manora	Manora	Hatoli	B-143	N $20^0$08.930 "	E$77^0$30'615"
		1.00	0.50	0.50	Yavatmal	Washim	Manora	Manora	Hatoli	B-143	N $20^0$08.930 "	E$77^0$30'615"
		1.00	0.50	0.50	Yavatmal	Washim	Manora	Shendona	Shendona	153	N $20^0$04.9162 "	E$77^0$58'44.11"
		1.00	0.50	0.50	Yavatmal	Washim	Manora	Shendona	Shendona	153	N $20^0$04.9162 "	E$77^0$58'44.11"
		1.00	0.50	0.50	Yavatmal	Washim	Manora	Shendona	Shendona	152	N $20^0$06.1526 "	E$77^0$58'46.82"
		1.00	0.50	0.50	Yavatmal	Washim	Manora	Shendona	Shendona	152	N $20^0$06.1526 "	E$77^0$58'46.82"
		1.00	0.50	0.50	Yavatmal	Washim	Washim	Washim	Ansing	155	N 20.02.786	E 077.21.706
		1.00	0.50	0.50	Yavatmal	Washim	Washim	Washim	Ansing	155	N 20.02.795	E 077.21.721
		1.00	0.50	0.50	Yavatmal	Washim	Washim	Washim	Ansing	155	N 20.02.801	E 077.21.734
		50.00		**25.00**								
		190.00		**95.00**								

Works proposed					Location of work						Latlong	
Rule No.	Item of work	Quantity	Rate	Amount (Rs. in Lakhs	Circle	Division	Range	Round	Beat	Compartment No	Longitude	Latitude
1	2	3	4	5	6	7	8	9	10	11	12	13
ii)	Construction of Cement Bandhare	1	15.00	15.00	Yavatmal	Yavatmal	S Arni	anjakhed	Ranidhanora	55	N-19.92.23	E-77.98.63
		1	15.00	15.00	Yavatmal	Yavatmal	S Arni	anjakhed	Ranidhanora	55	N-19.92.23	E-77.98.63
		1	15.00	15.00	Yavatmal	Yavatmal	Ner	Ner	Kolura	422	N-20.46.71	E-77.78.74
		1	15.00	15.00	Yavatmal	Yavatmal	Ner	Ner	Bangaon	437	N-20.26.44	E-77.46.30
		2	15.00	30.00	Yavatmal	Yavatmal	N Arni	Chandani	Shekalgaon	257	N-20.14.37	E-78.02.75
		1	15.00	15.00	Yavatmal	Yavatmal	N Arni	Hiwleshwar	Devarwadi	56	N-20.06.98	E-77.88.79
		1	15.00	15.00	Yavatmal	Yavatmal	N Arni	Hiwleshwar	Padhurna	16	N-19.99.90	E-77.91.98
		2	15.00	30.00	Yavatmal	Yavatmal	N Arni	Chandani	Mahsola	259	N-20.12.11	E-78.02.67
		10.00		**150.00**								
ii)	Construction of Cement Bandhare	1	15.00	15.00	YTL	PKD	Maregaon	Khandni	Durgada	41	N 20.009671	E078.652613
		11.00		**165.00**								
iv)	Construction of Forest Pond/ Vantale / Panvatha	1	3.00	3.00	Yavatmal	Yavatmal	Hiwari	Rui	Saykheda	254	N-20.15.44	E-78.09.31
		1	3.00	3.00	Yavatmal	Yavatmal	Darwha	Karjgaon	Mankinhi	138	N-20.19.21	E-77.40.04
		1	3.00	3.00	Yavatmal	Yavatmal	Darwha	Lohi	Lohi	450	N-20.26.54	E-77.37.04
		1	3.00	3.00	Yavatmal	Yavatmal	Darwha	Lohi	Lohi	448	N-20.26.13	E-77.36.39
		1	3.00	3.00	Yavatmal	Yavatmal	Darwha	Pathrot	Chani	311	N-20.19.37	E-77.59.16
		1	3.00	3.00	Yavatmal	Yavatmal	Darwha	Karajgaon	Dhamangaon	155	N-20.19.44	E-77.36.10
		1	3.00	3.00	Yavatmal	Yavatmal	S Arni	anjakhed	Anjankhed	47	N-19.56.23	E-77.69.15
		1	3.00	3.00	Yavatmal	Yavatmal	S Arni	anjakhed	Shari	39	N-19.95.69	E-78.00.72
		1	3.00	3.00	Yavatmal	Yavatmal	S Arni	anjakhed	Shari	39	N-19.96.68	E-78.01.04
		1	3.00	3.00	Yavatmal	Yavatmal	S Arni	Belora	Chani	24	N-20.00.51	E-78.06.18
		1	3.00	3.00	Yavatmal	Yavatmal	S Arni	Belora	Chani	26	N-20.00.93	E-78.02.29
		1	3.00	3.00	Yavatmal	Yavatmal	S Arni	Belora	Chani	23	N-20.00.77	E-78.05.54
		1	3.00	3.00	Yavatmal	Yavatmal	S Arni	anjakhed	Kurha	46	N-20.03.21	E-77.99.22
		1	3.00	3.00	Yavatmal	Yavatmal	S Arni	anjakhed	Kurha	41	N-20.03.19	E-77.98.93
		1	3.00	3.00	Yavatmal	Yavatmal	Ner	Ner	Ner	395	N-20.52.34	E-77.92.87
		1	3.00	3.00	Yavatmal	Yavatmal	Ner	Ner	Ner	428	N-20.50.65	E-77.84.48
		1	3.00	3.00	Yavatmal	Yavatmal	Ner	Ner	Ner	389	N-20.31.61	E-77.50.77
		1	3.00	3.00	Yavatmal	Yavatmal	Ner	Sonkhas	Sonkhas	411	N-20.38.54	E-77.97.47
		1	3.00	3.00	Yavatmal	Yavatmal	Ner	Mozar	Sirasgaon	446	N-20.31.16	E-77.43.22
		1	3.00	3.00	Yavatmal	Yavatmal	Ner	Malkhed	Malkhed	420	N-20.25.74	E-77.55.76
		20.00		**60.00**								

Works proposed					Location of work						Latlong	
Rule No.	Item of work	Quantity	Rate	Amount (Rs. in Lakhs	Circle	Division	Range	Round	Beat	Compartment No	Longitude	Latitude
1	2	3	4	5	6	7	8	9	10	11	12	13
iv)	Construction of Vantale	1	3.00	3.00	Yavatmal	Pusad	Digras	Digras	Digras	785	N-20.05.38	E-77.46.14
		1	3.00	3.00	Yavatmal	Pusad	Digras	Digras	Rohana	774	N-20.07.35	E-77.40.35
		1	3.00	3.00	Yavatmal	Pusad	Digras	Arambi	Tiwari-W	743	N-20.09.54	E-77.45.07
		1	3.00	3.00	Yavatmal	Pusad	Digras	Arambi	Tiwari-W	739	N-26.11.31	E-77.47.06
		1	3.00	3.00	Yavatmal	Pusad	Pusad	Chondi	Munjsi	369	N-19.99.77	E-77.49.54
		1	3.00	3.00	Yavatmal	Pusad	Pusad	Pusad	Belghavn	357	N-20.10.08	E-77.36.40
		1	3.00	3.00	Yavatmal	Pusad	Umarkhed	Krishnapur	Krashnapur	465	N-19.36.20	E-77.56.13
		1	3.00	3.00	Yavatmal	Pusad	Umarkhed	Krishnapur	Krashnapur	466	N-19.37.31	E-77.20.74
		1	3.00	3.00	Yavatmal	Pusad	Umarkhed	Phopali	Taroda	420	N-19.42.13	E-77.71.60
		1	3.00	3.00	Yavatmal	Pusad	Umarkhed	Phopali	Botha	431	N-19.41.40	E-77.40.10
		1	3.00	3.00	Yavatmal	Pusad	Mahagaon	Mahagaon	Mahagaon	445	N 19.45.06	E 77.46.04
		1	3.00	3.00	Yavatmal	Pusad	Mahagaon	Mahagaon	Mahagaon	423	N 19.43.29	E 77.40.47
		1	3.00	3.00	Yavatmal	Pusad	Shambilpampri	shilona	shilona	418	N 19.47.55	E 77.37.15
		1	3.00	3.00	Yavatmal	Pusad	Shambilpampri	shilona	Nagwadi	419	N 19.41.13	E 77.50.15
		1	3.00	3.00	Yavatmal	Pusad	Shambilpampri	Shembalpimpri	Hiwalni	861	N 19.48.39	E 77.26.30
		1	3.00	3.00	Yavatmal	Pusad	Shambilpampri	Fulwadi	Fulwadi	838	N 19.49.58	E 77.33.66
		1	3.00	3.00	Yavatmal	Pusad	Kali	kali	Tivring	13	N 19.57.48	E 77.53.29
		1	3.00	3.00	Yavatmal	Pusad	Kali	Kali	Tivring	50	N 20.03.34	E 77.39.25
		1	3.00	3.00	Yavatmal	Pusad	Kali	kali	Ghonsara	795	N 19.55.04	E 77.38.67
		1	3.00	3.00	Yavatmal	Pusad	Kali	kali	Chichpad	797	N 19.58.30	E 77. 43.10
		20	**Total**	**60.00**								
iv)	Vantale (Forest Pond)	1.00	3.00	3.00	Yavatmal	Washim	Karanja	Mangrulpir	Kolambi	C-153	N-20.12.5372	E-077.21.790
		1.00	3.00	3.00	Yavatmal	Washim	Karanja	Mangrulpir	Kolambi	C-156	N-20.16.305	E-077.22.611
		1.00	3.00	3.00	Yavatmal	Washim	Karanja	Mangrulpir	Vanoja	121-A	N-20.43.8126	E-077.199.452
		1.00	3.00	3.00	Yavatmal	Washim	Karanja	Mangrulpir	Vanoja	120	N-20.41.7022	E-077.20.2124
		1.00	3.00	3.00	Yavatmal	Washim	Karanja	Mangrulpir	Yedshi	116	N-20.22.12	E-077.11.23
		1.00	3.00	3.00	Yavatmal	Washim	Karanja	Karanja	Belkhed	412	N-20.39.48	E-077.34.19
		1.00	3.00	3.00	Yavatmal	Washim	Karanja	Karanja	Kajaleshwar	418	N-20.33.2647	E-077.24.4983
		1.00	3.00	3.00	Yavatmal	Washim	Karanja	Karanja	Kajaleshwar	225	N-20.31.1343	E-077.24.2639
		1.00	3.00	3.00	Yavatmal	Washim	Karanja	Karanja	Somthana	C-120	N-20.44.4173	E-077.58.2977
		1.00	3.00	3.00	Yavatmal	Washim	Malegaon	Pangara	Devthana-2	92	N-20.22.460	E-77.02.797
		1.00	3.00	3.00	Yavatmal	Washim	Washim	Washim	Toranala	160	N-20.19.95.02	E-077.15.12.08
		1.00	3.00	3.00	Yavatmal	Washim	Washim	Washim	Ansing	E-91	N-19.97.89.55	E-077.31.32.16

Works proposed					Location of work						Latlong	
Rule No.	**Item of work**	**Quantity**	**Rate**	**Amount (Rs. in Lakhs**	**Circle**	**Division**	**Range**	**Round**	**Beat**	**Compartment No**	**Longitude**	**Latitude**
1	**2**	**3**	**4**	**5**	**6**	**7**	**8**	**9**	**10**	**11**	**12**	**13**
	Vantale (Forest Pond)	1.00	3.00	3.00	Yavatmal	Washim	Manora	Manora	Pogradevi	435	N 20^{0}04'51.42"	E77^{0}61'48.42"
		1.00	3.00	3.00	Yavatmal	Washim	Manora	Manora	Sawargaon	C-102	N20^{0}16'26.67"	E77^{0}34'03.13"
		1.00	3.00	3.00	Yavatmal	Washim	Manora	Manora	Sawargaon	C-134	N20^{0}14'58.39"	E77^{0}35'45.06"
		1.00	3.00	3.00	Yavatmal	Washim	Manora	Giroli	Mendra-1	154	N20^{0}7'8"	E77^{0}24'9"
		1.00	3.00	3.00	Yavatmal	Washim	Manora	Palodi	Shendurjana	C-142	N20^{0}8' 28"	E77^{0}28'14"
		1.00	3.00	3.00	Yavatmal	Washim	Manora	Palodi	Rui-2	C-147	N.20.06.22	E.77.27.4
		1.00	3.00	3.00	Yavatmal	Washim	Manora	Palodi	Palodi-1	149	N 20^{0}05'073"	E77^{0}29'316"
		1.00	3.00	3.00	Yavatmal	Washim	Manora	Giroli	Bhildongar	158	N20^{0}193'509"	E77^{0}427'449"
		20.00		**60.00**								
		60.00		**180.00**								
v	Deep CCT (Ha.)	10.00	--	3.30	Yavatmal	Yavatmal	Ner	Ner	Ner	425	N-20.47.84	E-77.78.31
		10.00	--	3.30	Yavatmal	Yavatmal	Ner	Ner	Bangaon	437	N-20.46.06	E-77.77.79
		20.00	--	6.50	Yavatmal	Yavatmal	Ner	Ner	Ner	386	N-20.33.09	E-77.50.69
		8.00	--	2.50	Yavatmal	Yavatmal	Ner	Ner	Ner	396	N-20.32.41	E-77.54.72
		10.00	--	3.70	Yavatmal	Yavatmal	Darwha	Lohi	Lohi	450	N-20.27.02	E-77.36.22
		10.00	--	3.70	Yavatmal	Yavatmal	Darwha	Lohi	Lohi	450	N-20.26.19	E-77.36.30
		68.00		**23.00**								
v	Deep CCT (Ha.)	10.00	0.51	5.00	Yavatmal	Washim	Washim	Washim	Ansing	E-91	N-19.98.307	E-77.31.368
		10.00	0.51	5.00	Yavatmal	Washim	Washim	Washim	Ansing	E-90	N-20.036.203	E-077.34.43.78
		10.00	0.51	5.00	Yavatmal	Washim	Washim	Washim	Toranala	60	N-20.10.69.297	E-077.50.71.49
		10.00	0.51	5.00	Yavatmal	Washim	Washim	Washim	Toranala	E-49	N-20.12.13.76	E-077.93.870
		10.00	0.51	5.00	Yavatmal	Washim	Manora	Giroli	Bhildongar	147	N20^{0}193'138"	E77^{0}42'87"
		10.00	0.51	5.00	Yavatmal	Washim	Manora	Shendona	Shendona	153	N 20^{0}06.1526 "	E77^{0}58'46.82"
		10.00	0.51	5.00	Yavatmal	Washim	Manora	Manora	Hatoli	B-143	N 20^{0}08.907 "	E77^{0}30'264"
		10.00	0.51	5.00	Yavatmal	Washim	Manora	Manora	Sawargaon (T)	C-133	N20^{0}14'51.70"	E77^{0}35'02.79"
		40.00	0.51	20.00	Yavatmal	Washim	Manora	Manora	Sawargaon (T)	A- 429	N20^{0}15'44.23"	E77^{0}35'24.84"
		10.00	0.51	5.00	Yavatmal	Washim	Manora	Manora	Sawargaon (T)	C- 135	N20^{0}14'50.32"	E77^{0}36'56.03"
		10.00	0.51	5.00	Yavatmal	Washim	Manora	Manora	Poharadevi	437	N 20^{0}09'28.29"	E77^{0}63'98.48"
		10.00	0.51	5.00	Yavatmal	Washim	Manora	Manora	Poharadevi	C-216	N20^{0}14'50.32"	E77^{0}36'56.03"
		150.00		**75.00**								
		218.00		**98.00**								

Works proposed					Location of work						Latlong	
Rule No.	**Item of work**	**Quantity**	**Rate**	**Amount (Rs. in Lakhs**	**Circle**	**Division**	**Range**	**Round**	**Beat**	**Compartment No**	**Longitude**	**Latitude**
1	**2**	**3**	**4**	**5**	**6**	**7**	**8**	**9**	**10**	**11**	**12**	**13**
vi)	Mati Nala Bandh (MNB)	1	3.00	3.00	Yavatmal	Yavatmal	S Arni	anjakhed	Ranidhanora	55	N-19.92.41	E-77.98.69
		1	3.00	3.00	Yavatmal	Pusad	Digras	Digras	Sakra	770A	N-20.12.38	E-77.41.13
		1	3.00	3.00	Yavatmal	Pusad	Digras	Arambi	Tiwari-W	739	N-20.11.41	E-77.48.19
		1	3.00	3.00	Yavatmal	Pusad	Digras	Arambi	Tiwari-E	777	N-20.10.53	E-77.47.34
		1	3.00	3.00	Yavatmal	Pusad	Digras	Arambi	Amla	740	N-20.11.39	E-77.48.16
		1	3.00	3.00	Yavatmal	Pusad	Digras	Arambi	Shivani-1	741	N-20.11.03	E-77.50.28
		1	3.00	3.00	Yavatmal	Pusad	Digras	Singed	Rui	343	N-20.03.42	E-77.66.80
		1	3.00	3.00	Yavatmal	Pusad	Digras	Singed	Singad	344	N-20.01.61	E-77.65.86
		1	3.00	3.00	Yavatmal	Pusad	Digras	Singed	Singad	345	N-20.02.11	E-77.62.58
		3	3.00	9.00	Yavatmal	Pusad	Digras	Singed	Sakri	339	N-20.01.56	E-77.70.76
		1	3.00	3.00	Yavatmal	Pusad	Digras	Singed	Sakri	338	N-20.00.45	E-77.72.16
		1	3.00	3.00	Yavatmal	Pusad	Digras	Deahni-E	Wadgaon	326	N-20.01.37	E-77.52.19
		1	3.00	3.00	Yavatmal	Pusad	Digras	Deahni-W	Kandli	791	N-20.00.19	E-77.48.66
		2	3.00	6.00	Yavatmal	Pusad	Digras	Deahni-W	Deahni-1	328	N-19.98.60	E-77.85.53
		16	**Total**	**48.00**								
		17		**51.00**								
	Total SMC Works	**496.00**		**589.00**								
5(2)(i)	**Improvement of wildlife habitat as provided in the approved wild life management plan or working plan**											
iii)	Water holes creation (New) @ Rs. 1.00 lac.	1	1.00	1.00	Yavatmal	Pusad	Pusad	Chondi	Munjsi	368	N-20.00.19	E-77.31.28
		1	1.00	1.00	Yavatmal	Pusad	Pusad	Pusad	Belghavn	356	N-20.03.25	E-77.61.68
		1	1.00	1.00	Yavatmal	Pusad	Pusad	Pusad	Javrnagar	352	N-20.00.42	E-77.38.03
		1	1.00	1.00	Yavatmal	Pusad	Pusad	Pusad	Pusad	826	N-19.93.02	E-77.64.16
		1	1.00	1.00	Yavatmal	Pusad	Pusad	Pusad	Dhundi	354	N-20.00.30	E-77.36.24
		1	1.00	1.00	Yavatmal	Pusad	Umarkhed	Umarkhed	Marsul	439	N-19.36.20	E-77.56.13
		1	1.00	1.00	Yavatmal	Pusad	Umarkhed	Jewli	Penda	495	N-19.31.10	E-77.57.30
		1	1.00	1.00	Yavatmal	Pusad	Umarkhed	Jewli	Pimpalgaon	497	N-19.30.22	E-77.56.53
		1	1.00	1.00	Yavatmal	Pusad	Umarkhed	Phopali	Adad	751	N-19.45.60	E-77.13.48
		1	1.00	1.00	Yavatmal	Pusad	Umarkhed	Phopali	Adad	751	N-19.45.60	E-77.13.48
		1	1.00	1.00	Yavatmal	Pusad	Umarkhed	Krishnapur	Piranji	463	N-19.38.00	E-77.62.63
		1	1.00	1.00	Yavatmal	Pusad	Umarkhed	Krishnapur	Krashnapur	466	N-19.37.64	E-77.13.48

Works proposed					Location of work						Latlong	
Rule No.	**Item of work**	**Quantity**	**Rate**	**Amount (Rs. in Lakhs**	**Circle**	**Division**	**Range**	**Round**	**Beat**	**Compartment No**	**Longitude**	**Latitude**
1	**2**	**3**	**4**	**5**	**6**	**7**	**8**	**9**	**10**	**11**	**12**	**13**
iii)	Water holes creation (New) @ Rs. 1.00 lac.	3	1.00	3.00	Yavatmal	Pusad	Mahagaon	Mahagaon	Bhamb	447	N 19.41.55	E 77.49.25
		5	1.00	5.00	Yavatmal	Pusad	Shambilpampri	Shembalpimpri	Shembalpimpri	844	N 20.02.49	E 77.39.76
		1	1.00	1.00	Yavatmal	Pusad	Kali	Kali	Tiwarng	13	N-19.54.98	E-77.42.77
		1	1.00	1.00	Yavatmal	Pusad	Kali	Gunj	Hiwari	336	N-19.54.98	E-77.42.70
		1	1.00	1.00	Yavatmal	Pusad	Kali	Gunj	Hiwari	336	N-19.54.98	E-77.42.70
		1	1.00	1.00	Yavatmal	Pusad	Kali	Gunj	Kasola	810	N-19.54.04	E-77.68.70
		1	1.00	1.00	Yavatmal	Pusad	Kali	Kali	Kasola	812	N-19.53.56	E-77.39.78
		1	1.00	1.00	Yavatmal	Pusad	Kali	Kali	Chichpad	797	N-19.54.51	E-77.26.02
		1	1.00	1.00	Yavatmal	Pusad	Kali	Wadad	Wadad	346	N-19.57.96	E-77.22.62
		1	1.00	1.00	Yavatmal	Pusad	Kali	Kali	Chichpad	797	N-19.54.51	E-77.26.02
		1	1.00	1.00	Yavatmal	Pusad	Kali	Wadad	Wadad	346	N-19.57.96	E-77.22.62
		1	1.00	1.00	Yavatmal	Pusad	Marwadi	Marwadi	Hanwatkheda	387	N-19.57.52	E-77.23.24
		1	1.00	1.00	Yavatmal	Pusad	Marwadi	Marwadi	Hanwatkheda	388	N-19.57.10	E-77.22.28
		1	1.00	1.00	Yavatmal	Pusad	Marwadi	Marwadi	Marwadi B	391	N-19.55.44	E-77.23.45
		1	1.00	1.00	Yavatmal	Pusad	Marwadi	Marwadi	Marwadi B	392	N-19.56.60	E-77.23.38
		1	1.00	1.00	Yavatmal	Pusad	Marwadi	Marwadi	Hiwalni	393	N-19.55.56	E-77.24.36
		34.00	**Total**	**34.00**								
5(2)(k)	**Establishment operation & maintaince of animal rescue centre & veterinary tratment facilities for wild animals**											
i	Establishment, operation and maintenance of animal rescue centre/ Transit (treatment Kit)	4	50000	2.00	Yavatmal	Yavatmal	-	-	-	-	-	
		1.00	1.00	1.00	Yavatmal	Washim	Karanja	Mangrulpir	Kasola	Mangrulpir Municipal Corporation	E-77.33	N-20.30
ii	Veterinary treatment facilities for wild animals			3.00	Yavatmal	Pusad						
iii	Animal seizing & capturing devices											
	Animal seizing & capturing devices (Monkey Capture) **Carnivorous cage**	2	0.50	1.00	Yavatmal	Pusad	Digras					
		2	0.50	1.00	Yavatmal	Pusad	Pusad					
		2	0.50	1.00	Yavatmal	Pusad	Umarkhed					
		2	0.50	1.00	Yavatmal	Pusad	Mahagaon					
		2	0.50	1.00	Yavatmal	Pusad	Shambilpampri					
		2	0.50	1.00	Yavatmal	Pusad	Kali					
		2	0.50	1.00	Yavatmal	Pusad	Marwadi					

Works proposed					Location of work						Latlong	
Rule No.	**Item of work**	**Quantity**	**Rate**	**Amount (Rs. in Lakhs**	**Circle**	**Division**	**Range**	**Round**	**Beat**	**Compartment No**	**Longitude**	**Latitude**
1	**2**	**3**	**4**	**5**	**6**	**7**	**8**	**9**	**10**	**11**	**12**	**13**
iii	Animal seizing & capturing devices (Monkey Capture) **Monkey Cage**	1	0.30	0.30	Yavatmal	Pusad	Digras					
		1	0.30	0.30	Yavatmal	Pusad	Pusad					
		1	0.30	0.30	Yavatmal	Pusad	Umarkhed					
		1	0.30	0.30	Yavatmal	Pusad	Mahagaon					
		1	0.30	0.30	Yavatmal	Pusad	Shambilpampri					
		2	0.30	0.60	Yavatmal	Pusad	Kali					
		1	0.30	0.30	Yavatmal	Pusad	Marwadi					
	Camera Trap	10	0.25	2.50	Yavatmal	Pusad	Digras					
		10	0.25	2.50	Yavatmal	Pusad	Pusad					
		10	0.25	2.50	Yavatmal	Pusad	Umarkhed					
		10	0.25	2.50	Yavatmal	Pusad	Mahagaon					
		10	0.25	2.50	Yavatmal	Pusad	Shambilpampri					
		10	0.25	2.50	Yavatmal	Pusad	Kali					
		10	0.25	2.50	Yavatmal	Pusad	Marwadi					
		92.00		26.90								
	Animal seizing & capturing devices (Monkey Capture)	1.00	1.00	1.00	Yavatmal	Washim	Karanja	Mangrulpir	Kasola	Mangrulpir Municipal Corporation		
	Monkey Transport	2.00	0.80	1.60	Yavatmal	Washim	Karanja	Mangrulpir	Kasola	Mangrulpir Municipal Corporation		
	Snake Tongue	8.00	0.80	0.80	Yavatmal	Washim	Karanja	Mangrulpir	Kasola	Mangrulpir Municipal Corporation		
	Snake Stick	8.00	0.80	0.80	Yavatmal	Washim	Karanja	Mangrulpir	Kasola	Mangrulpir Municipal Corporation		
	Tranquilizing Gun and Acceseries	1 Set	1.00	1.00	Yavatmal	Washim	Karanja	Mangrulpir	Kasola	Mangrulpir Municipal Corporation		
	Stretcher (2 Item)	2.00	0.50	0.50	Yavatmal	Washim	Karanja	Mangrulpir	Kasola	Mangrulpir Municipal Corporation		
		21.00		5.70								
v	Strengthening of Rapid rescue teams (Training to rescue Team) 1/Month		1.00	1.00	Yavatmal	Washim	Karanja	Mangrulpir	Kasola	Mangrulpir Municipal Corporation		
	Total 5(2)(k)	**118.00**		**39.60**								
	Grand Total for Activities under not less than 80% component			**3125.17**								

Works proposed					Location of work						Latlong	
Rule No.	**Item of work**	**Quantity**	**Rate**	**Amount (Rs. in Lakhs**	**Circle**	**Division**	**Range**	**Round**	**Beat**	**Compartment No**	**Longitude**	**Latitude**
1	**2**	**3**	**4**	**5**	**6**	**7**	**8**	**9**	**10**	**11**	**12**	**13**
5 (3)	**Works under not more than 20 % component (Rule 5 (3))**											
5 (3)(d)	Construction, up-gradation and maintenance of inspection paths, forest roads in forest area, fire lines, **watch towers,** check posts and timber depots	1	10.00	10.00	Yavatmal	Yavatmal	S Arni	Belora	Daheli	22	N-20.01.32	E-78.03.36
		1	10	10.00	Yavatmal	PKD	Jamni	Matharju	Mandvi	59	N 19.797435	E078.678822
		1	10.00	10.00	Yavatmal	Pusad	Shambilpampri	Shembalpimpri	Ansing	413	N-19.48.22	E.77.26.23
		3.00	**10**	**30.00**								
5(3)(e)	**Construction of residential and official buildings in forests for front line staffs deployed for protection of forest and wildlife**											
i	Construction of Type I Quarters	1	22.00	22.00	Yavatmal	Yavatmal	N.Arni	Jawala	Shirpur		N-20.4.35	E-77.57.19
		1	22.00	22.00	Yavatmal	Yavatmal	Ner	Ner	Ner	425	N-20.28.47	E-77.52.43
		2	**-**	**44.00**								
		1	22.00	22.00	YTL	PKD	Parwa	Parwa	Kinhi	-	20.029559	7836 54 26
		1	22.00	22.00	YTL	PKD	Maregaon	Ralegaon	Loni	-	N 20.265418	E078.543076
		2.00		**44.00**								
		1	22.00	22.00	Yavatmal	Pusad	Pusad	Pusad	Belghavn	-	N-19.99.64	E-77.58.66
		1	22.00	22.00	Yavatmal	Pusad	Kali	Wadad	Sai		N 19.59.05	E 77.38.30
		2.00	**Total**	**44.00**								
		2.00	22.00	44.00	Yavatmal	Washim	Manora	Shendona	Shendona		N-20.063041	E-77.589616
		2.00		**44.00**								
		8.00		**176.00**								
ii	Construction of Type II Quarters	1	26.00	26.00	Yavatmal	Yavatmal	N.Arni	Jawala	Shirpur	-	N-20.4.35	E-77.57.19
		1	26.00	26.00	YTL	PKD	Maregaon	Maregaon	Maregaon		N 20.0621	E078.4821
		1.00	26.00	26.00	Yavatmal	Washim	Manora	Manora	Manora		N-20.12.56.87	E77.3150.58
		3.00		**78.00**								
iii	Construction of Type III Quarters	1	36.00	36.00	Yavatmal	Yavatmal	N.Arni	Jawala	Shirpur		**N-20.4.35**	**E-77.57.19**
		1	36.00	36.00	YTL	PKD	Ghatanji	Ghatanji	Ghatanji	-	N 20.08022	E78.18550
		1.00	36.00	36.00	Yavatmal	Washim	Manora	Manora	Manora		N-20.12.56.87	E77.3150.58
		3.00		**108.00**								

Works proposed					Location of work						Latlong	
Rule No.	**Item of work**	**Quantity**	**Rate**	**Amount (Rs. in Lakhs**	**Circle**	**Division**	**Range**	**Round**	**Beat**	**Compartment No**	**Longitude**	**Latitude**
1	**2**	**3**	**4**	**5**	**6**	**7**	**8**	**9**	**10**	**11**	**12**	**13**
iii	Construction of Range office	1	45.00	45.00	Yavatmal	Yavatmal	N.Arni	Jawala	Shirpur		N-20.4.35	E-77.57.19
		1	45.00	45.00	Yavatmal	PKD	Pandharkawada	Pandharkawada	Pandharkawada	-	N 19.811017	E078.854143
		1	45.00	45.00	Yavatmal	Pusad	Shambilpampri	Shembalpimpri	Shembalpimpri		N 19.48.16	E 77.25.41
		1.00	45.00	45.00	Yavatmal	Washim	Manora	Manora	Manora		N-20.12.56.87	E77.3150.58
		4.00		**180.00**								
v	Amenities for Woman Front line staff	1.00	14	14.00	YTL	PKD	Mukutban	Mukutban	Mukutban	-	N 19.811017	E078.854143
		1.00	14.00	14.00	Yavatmal	Washim	Manora	Shendona	Shendurjana	Depot.	N 20.145414	E 77.462306
		2.00		**28.00**								
	Total New Construction	**20.00**		**570.00**								
5(3)(i)	Publicity-cum-awareness programme and exhibition on the various schemes being implemented by the State Authority from State Fund (including Nature Awareness Program conduct by METDB)			2.00	Yavatmal	Yavatmal	All Range					
				2.00	Yavatmal	Pkd	All Range					
				2.00	Yavatmal	Pusad	All Range					
				2.00	Yavatmal	Washim	All Range					
				8.00								
	Total for works under not more than 20% component			**608.00**								
	NPV (04) Grand Total			**3733.17**								

ANNUAL PLAN OF OPERATIONS 2022-23

FORMAT VII A---- Forestry and other activities proposed under Net Present Value amount (Please see Rule no. 5(2), 5(3), and proviso under Rule 5(3) (NPV - 04)

Nagpur East Wildlife Circle

Works proposed					Location of work						Latlong	
Rule No.	**Item of work**	**Quantity**	**Rate**	**Amount (Rs. in Lakhs**	**Circle**	**Division**	**Range**	**Round**	**Beat**	**Compartment No**	**Latitude**	**Longitude**
1	**2**	**3**	**4**	**5**	**6**	**7**	**8**	**9**	**10**	**11**	**12**	**13**
5 (2)	**Works under Not less than 80 % component (Rule 5 (2))**											
	Forest Protection											
5(2)d	**Protection of Plantations and Forest**											
5(2) d (i)	Encroachment removal & Forest Protection	10	0.1	1.00	FD PTR	PTR	Paoni(U.C)	Paoni	Patharai	588	N 21°31'09.85"	E79°18'47.85"
5(2) d (i)	Encroachment removal & Forest Protection	10	0.1	1.00	FD PTR	PTR	Paoni(U.C)	Paoni	Patharai	268	N 21°32'08.47"	E79°18'47.22"
5(2) d (i)	Encroachment removal & Forest Protection	10	0.1	1.00	FD PTR	PTR	Paoni(U.C)	Paoni	Chargaon	585	N 21°32'47.03"	E79°18'15.06"
5(2) d (i)	Encroachment removal & Forest Protection	10	0.1	1.00	FD PTR	PTR	Nagalwadi	Suvardhara	Mohgaon	634	N21°28’08’20	E79°01’39.28
5(2) d (i)	Encroachment removal & Forest Protection	10	0.1	1.00	FD PTR	PTR	Nagalwadi	Suvardhara	Mohgaon	635	N21°28.57.83	E79°01’29.61’’
5(2) d (i)	Encroachment removal & Forest Protection	10	0.1	1.00	FD PTR	PTR	Nagalwadi	Surewani	South Surewani	650	N21°32’17.08	E79°59’55.61
5(2) d (i)	Encrochment removal	10	1.00	10.00	FD PTR	BTR	Kuhi	Ranbodi	Chikana	1437	N-20,53,29.8	E-79,27,4.7
5(2) d (i)	Encrochment removal	10	1.00	10.00	FD PTR	BTR	Kuhi	Velgaon	Velgaon N	1457 1458	N-20,52,51.20	E-79,29,28.00
5(2) d (i)	Encrochment removal	10	1.00	10.00	FD PTR	BTR	Kuhi	Velgaon	Velgaon S	1447 1459	N-20,53,24.20	E-79,28,57.04
5(2) d (i)	Encrochment removal	10	1.00	10.00	FD PTR	BTR	Kuhi	Velgaon	Dhamana	1447 1448	N-20,52,64.00	E-79,27,85.00
5(2) d (i)	**Sub Total for Encroachment removal & Forest Protection**	**100.00**		**46.00**								
5 (2) d (ii)	**Survey Demarcation & Fencing of Sensitive forest Areas**											
5 (2) d (ii)	Survey Demarcation and Fencing of Sensetive Forest Area			4.00	FD PTR	PTR	Paoni(U.C)	Paoni	Patharai	588	N 21°31'09.85"	E79°18'47.85"
				4.00	FD PTR	PTR	Paoni(U.C)	Paoni	Patharai	268	N 21°32'08.47"	E79°18'47.22"
				4.00	FD PTR	PTR	Paoni(U.C)	Paoni	Chargaon	585	N 21°32'47.03"	E79°18'15.06"
				4.00	FD PTR	PTR	Nagalwadi	Suvardhara	Mohgaon	634	N21°28’08’20	E79°01’39.28
				4.00	FD PTR	PTR	Nagalwadi	Suvardhara	Mohgaon	635	N21°28.57.83	E79°01’29.61’’
				5.00	FD PTR	PTR	Nagalwadi	Surewani	South Surewani	650	N21°32’17.08	E79°59’55.61
5 (2) d (ii)	Survey and Demarcation of outer Boundary of sanctuary along with construction of Boundary Pillars (Class-1 & 2)	8.50 Km	LS	8.50	FD PTR	BTR	Umred (WL)	Navegaon Deshmukh	Navegaon Deshmukh	1439, 1442	N 20 80 34.25 N 20 80 82.92 N 20 80 81.19 N 20 80 88.99	E079 41 14.89, E079 42 31.89, E 079 42 62.67, E 079 45 47.46

Works proposed					Location of work						Latlong	
Rule No.	**Item of work**	**Quantity**	**Rate**	**Amount (Rs. in Lakhs**	**Circle**	**Division**	**Range**	**Round**	**Beat**	**Compartment No**	**Latitude**	**Longitude**
1	**2**	**3**	**4**	**5**	**6**	**7**	**8**	**9**	**10**	**11**	**12**	**13**
5 (2) d (ii)	Survey and Demarcation of outer Boundary of sanctuary along with construction of Boundary Pillars (Class-1 & 2)	11.35 Km	LS	8.75	FD PTR	BTR	Umred (WL)	Somnala	Pullar	1464, 1465, 1466	N20 51 13.81 N 20 51 49.19 N 20 50 20.14 N 20 51 13.81 N 20 49 52.53 N 20 50 20.14	E079 29 46.49 E079 30 46.69, E 079 29 44.45, E 079 29 48.83, E 079 29 18.15, E 079 29 44.45
5 (2) d (ii)	Survey and Demarcation of outer Boundary of sanctuary along with construction of Boundary Pillars (Class-1 & 2)	9.625 Km	LS	6.70	FD PTR	BTR	Kuhi	Ranbodi	Wanoda	1413/1 1413/2 1410	N-20,52,55.00,	E-79,23,22.00
5 (2) d (ii)	Survey and Demarcation of outer Boundary of sanctuary along with construction of Boundary Pillars (Class-1 & 2)	7.25 Km	LS	5.90	FD PTR	BTR	Kuhi	Velgaon	Dhamana	1448,1447, 1459	N-20,52,64.00,	E-79,27,85.00
5 (2) d (ii)	Survey and Demarcation of outer Boundary of sanctuary along with construction of Boundary Pillars (Class-1 & 2)	18.067 Km	LS	20.30	FD PTR	BTR	Pauni	Pauni	Mahalgaon, Gaidongari	390B, 220,218,1482/1, 1475B	N 20o49'08.4 N 20o49'28.0 N 20o50'40.21 N 20o51'16.90 N 20o50'59.43	E 79o34'15.2 E 79o33'55.9 E 79o33'56.29 E 79o34'08.70 E 79o32'54.79
5 (2) d (ii)	Survey and Demarcation of outer Boundary of sanctuary along with construction of Boundary Pillars (Class-1 & 2)	12.835 Km	LS	13.40	FD PTR	BTR	Pauni	Nimgaon	Chichgaon, Jogikheda	22,62,29,390	N 20o48'00.75 N 20o48'12.33 N 20o47'3.6 N 20o47'0	E 79o35'07.16 E 79o35'30.58 E 79o35'09 E 79o34'51
5 (2) d (ii)	Survey Demarcation and Fencing of Sensetive Forest Area of sanctuary 7 Km	7.00 Km	LS	21.00	FD PTR	BTR	Umred (WL)	Somanala, Navegaon D	Karandala,Thana,Navegaon D, Ranbodi South, Ranmangali, Tas, Kitali, Pullar, Ranbodi East	1415,1416,363,1417,1418,1419,1439,1442,360,359,361,362,1440,1441,1452,1468,1450,1451,1464,1465,1466,757,763,357,358	N 20 50 30.07 N 20 50 24.90 N 20 51 01.31 N 20 49 13.41 N20 48 59.57 N 20 48 47.41 N20 48 27.36 N 20 48 37.41, N 20 48 59.75 N 20 50 03.43 N 20 50 44.50 N 20 49 48.50 N 20 49 29.73 N 20 48 35.01 N 20 48 16.04, N 20 49 53.93 N 20 49 34.77 N 20 51 32.10 N 20 52 08.83 N 20 50 31.40 N 20 51 44.13	E 079 23 31.05, E 079 23 55.64, E 079 24 49.00, E 079 24 05.74, E 079 23 31.44, E 079 23 44.51, E079 24 49.87, E 079 25 37.42, E 079 26 16.86, E 079 25 30.90, E 079 25 56.01, E 079 27 15.04, E 079 26 32.32, E 079 28 48.00 , E 079 29 41.15, E 079 28 35.73 , E 079 29 16.60, E 079 29 49.23,
5 (2) d (ii)	Survey Demarcation and Fencing of Sensetiv Forest Area of sanctuary 5 Km	5.00 Km	LS	15.00	FD PTR	BTR	Pauni	Nimgaon	Chichgaon	226	N 20o47'44.73	E 79o33'12.54
5 (2) d (ii)	**Sub Total for Survey Demarcation & Fencing of Sensitive forest Areas**			**124.55**								

Works proposed					Location of work						Latlong	
Rule No.	Item of work	Quantity	Rate	Amount (Rs. in Lakhs	Circle	Division	Range	Round	Beat	Compartment No	Latitude	Longitude
1	2	3	4	5	6	7	8	9	10	11	12	13
5 (2) d (iv)	**Construction, upgradation and maintance of protection camps / forst custody**											
5 (2) d (iv)	Contrustion Of Protection Hut in North Saleghat Beat	1	20.00	20.00	FD PTR	PTR	Saleghat	Saleghat	N.Saleghat	657	N21°31'07.82"	E 79°03'24'84"
5 (2) d (iv)	Construction Of Protection Hut in Ambazari	1	20.00	20.00	FD PTR	PTR	West Pench	Narhar, Kolitmara, Ghatpendhari	Narhar	690	N21°33'03.9"	E79°08'17.93"
5 (2) d (iv)	Protection camps & Nakas	1	20	20.00	FD TATR	Buffer TATR	Mul	Janala	Fulzari	360 (Zaran kuti)	N 20 3 33 26	E 79 33 42 24
5 (2) d (iv)	Protection camps & Nakas	1	20	20.00	FD TATR	Buffer TATR	Moharli	Padmapur	Chicholi	201B	N 20 7 17 91	E 79 15 39 58
5 (2) d (iv)	Construction of Anti poaching camp for Kokana Beat at Kolasur	1	20.00	20.00	FD NNTR	DD NNTR	Navegaon	Kokana	kokana	3	N-20,59,55.55	E 80 08 02
5 (2) d (iv)	Construction of Anti poaching camp for Nishani Beat at Kosabi	1	20.00	20.00	FD NNTR	DD NNTR	Navegaon	Kosabi	Nishani	705	N-20 59 20 00	E 80 14 2 00
5 (2) d (iv)	**Sub Total for Construction, upgradation and maintance of protection camps / forst custody**			**120.00**								
5(2) d(v)	**Establishment and maintenance of wireless networks**											
5(2) d(v)	Wireless Network Establishment & Strengthening	1	5.00	5.00	FD PTR	PTR	Chorbahuli	Kirangisara	Tuyapar West	606	N21°29'45.98"	E79°13'36.27"
5(2) d(v)	Wireless Network Establishment & Strengthening	1	5.00	5.00	FD PTR	PTR	Chorbahuli	Chorbahuli	Chatrapur	611	N21°27'49.94	E79°13'37.46
5(2) d(v)	Wireless Network Establishment & Strengthening	1	5.00	5.00	FD PTR	PTR	Paoni(U.C)	-	-	421	N 21³52'68.2"	E79°34'7.08
5(2) d(v)	maintenance of Wireless Instruments at base stations for effective communication.	18	LS	5.00	FD PTR	BTR	All Ranges	Somnala, Navegaon D	Survey No 735,Ranmangali,Karandla	1,44,01,416	N 20 49 44.9 N 20 50 44.09	E079 26 24.52, E 079 24 01.92
5(2) d(v)	Establishment and maintenance of wireless networks	1.00	3.75	3.75	FD NNTR	DD NNTR	Nagzira	Kosamtondi	-	-	210 12' 42.4" N	800 4' 34.9" E
5(2) d(v)	Establishment and maintenance of wireless networks	1.00	3.75	3.75	FD NNTR	DD NNTR	Nagzira	Hirapur			210 18' 37.19" N	800 7' 43.45" E
5(2) d(v)	Establishment and maintenance of wireless networks	1.00	3.75	3.75	FD NNTR	DD NNTR	Nagzira	Sakoli			210 05' 10.71" N	800 0' 18.77" E
5(2) d(v)	Establishment and maintenance of wireless networks	1.00	3.75	3.75	FD NNTR	DD NNTR	Nawegaon Park	Pawoni Kokna		Pawoni Village	210 53' 52.95" N	800 09' 21.10" E
5 (2) d (v)	**Sub Total for Establishment and maintenance of wireless networks**			**35.00**								

Works proposed					Location of work						Latlong	
Rule No.	Item of work	Quantity	Rate	Amount (Rs. in Lakhs	Circle	Division	Range	Round	Beat	Compartment No	Latitude	Longitude
1	2	3	4	5	6	7	8	9	10	11	12	13
5 (2) d (vi)	**Improving mobility of frontline staff for forest protection and patrolling**		**LS**	**2.00**	**PTR**							
			LS	**2.00**	**BTR**							
			LS	**2.00**	**TATR**							
			LS	**2.00**	**NNTR**							
5 (2) d (vi)	**Sub Total for Improving mobility of frontline staff for forest protection and patrolling**			**8.00**								
5 (2) d	**Total for Protection of Plantations and Forests**			**333.55**								
5(2) (f)	**Forest Fire prevention and control operations**											
5(2) (f)(ii)	**Cutting and burning of fire lines**											
5(2) (f)(ii)	Cutting and burning of the fire line (A -Class fire line)	11.88	8000	0.95	CCF & FD PTR Nagpur	PTR Nagpur	East pench	South Salama	Totladoh	537	N21°39'14.27"	E79°13'35.72
5(2) (f)(ii)	Cutting and burning of the fire line (A -Class fire line)	11.88	8000	0.95	CCF & FD PTR Nagpur	PTR Nagpur	East pench	Sillari	Pipariya	566	N 21°34'34.02" '	E79°15'14.16'
5(2) (f)(ii)	Cutting and burning of the fire line (A -Class fire line)	11.88	8000	0.95	CCF & FD PTR Nagpur	PTR Nagpur	East pench	Sillari	South Fulzari	546	N21°35'49.39"	E79°13'08.89"
5(2) (f)(ii)	Cutting and burning of the fire line (A -Class fire line)	11.88	8000	0.95	CCF & FD PTR Nagpur	PTR Nagpur	East pench	North Salama	East Chikhalkhari	511	N 21°40’52.31”	E 79°18’32.43”
5(2) (f)(ii)	Cutting and burning of the fire line (A -Class fire line)	11.88	8000	0.95	CCF & FD PTR Nagpur	PTR Nagpur	East pench	South Salama	North Salama	575	N 21°36’54.05”	E 79°18’32.43”
5(2) (f)(ii)	Cutting and burning of the fire line (A -Class fire line)	11.88	8000	0.95	CCF & FD PTR Nagpur	PTR Nagpur	west pench	Ghatpendhari	E.Ghatpendhari	676	N21°38'15.13"	E079°10'37.81"
5(2) (f)(ii)	Cutting and burning of the fire line (A -Class fire line)	11.88	8000	0.95	CCF & FD PTR Nagpur	PTR Nagpur	west pench	Ghatpendhari	W.Ghatpendhari	678	N21°38'38.35	E079°10'55.49"
5(2) (f)(ii)	Cutting and burning of the fire line (A -Class fire line)	11.88	8000	0.95	CCF & FD PTR Nagpur	PTR Nagpur	west pench	Kolitmara	Surera	666	N21°37'34.28"	E079°10'56.29"
5(2) (f)(ii)	Cutting and burning of the fire line (A -Class fire line)	11.88	8000	0.95	CCF & FD PTR Nagpur	PTR Nagpur	west pench	Kolitmara	Surera	667	N21°37'06.41"	E079°12'33.71"

Works proposed					Location of work						Latlong	
Rule No.	Item of work	Quantity	Rate	Amount (Rs. in Lakhs	Circle	Division	Range	Round	Beat	Compartment No	Latitude	Longitude
1	2	3	4	5	6	7	8	9	10	11	12	13
5(2) (f)(ii)	Cutting and burning of the fire line (A -Class fire line)	11.88	8000	0.95	CCF & FD PTR Nagpur	PTR Nagpur	west pench	Narhar	East Narhar	687	N21°36'30.18"	E079°11'15.82"
5(2) (f)(ii)	Cutting and burning of the fire line (A -Class fire line)	11.88	8000	0.95	CCF & FD PTR Nagpur	PTR Nagpur	Saleghat	Saleghat	Pathar	643	N21°30'11.32"	E079°03'23.06"
5(2) (f)(ii)	Cutting and burning of the fire line (A -Class fire line)	11.88	8000	0.95	CCF & FD PTR Nagpur	PTR Nagpur	Saleghat	Saleghat	S. Saleghat	642	N21°30'23.30"	E079°02'40.08"
5(2) (f)(ii)	Cutting and burning of the fire line (A -Class fire line)	11.88	8000	0.95	CCF & FD PTR Nagpur	PTR Nagpur	Saleghat	Saleghat	Ambazari	624	N21°30'47.69"	E079°05'28.21"
5(2) (f)(ii)	Cutting and burning of the fire line (A -Class fire line)	11.88	8000	0.95	CCF & FD PTR Nagpur	PTR Nagpur	Saleghat	Saleghat	Ambazari	645	N21°31'40.21"	E079°04'34.90"
5(2) (f)(ii)	Cutting and burning of the fire line (A -Class fire line)	11.88	8000	0.95	CCF & FD PTR Nagpur	PTR Nagpur	Saleghat	Dhavlapur	Dhavlapur	659	N21°32'22.94"	E079°05'07.48"
5(2) (f)(ii)	Cutting and burning of the fire line (A -Class fire line)	11.88	8000	0.95	CCF & FD PTR Nagpur	PTR Nagpur	Nagalwadi	Surewani	East Saleghat	655	N 21°32’26.65”	E79°02’11.02
5(2) (f)(ii)	Cutting and burning of the fire line (A -Class fire line)	11.88	8000	0.95	CCF & FD PTR Nagpur	PTR Nagpur	Nagalwadi	Surewani	South Surewani	650	N21°32’17.08	E79°59’55.61
5(2) (f)(ii)	Cutting and burning of the fire line (A -Class fire line)	11.88	8000	0.95	CCF & FD PTR Nagpur	PTR Nagpur	Nagalwadi	Ambazari	Banera	727	N21°13’14.80”	E79°08’35.90
5(2) (f)(ii)	Cutting and burning of the fire line (A -Class fire line)	11.88	8000	0.95	CCF & FD PTR Nagpur	PTR Nagpur	Nagalwadi	Suvardhara	Hattikheda	628	N21°28’40.49’’	E79°04’43.15’’
5(2) (f)(ii)	Cutting and burning of the fire line (A -Class fire line)	11.88	8000	0.95	CCF & FD PTR Nagpur	PTR Nagpur	Nagalwadi	Suvardhara	Mohgaon	634	N21°28’08’20	E79°01’39.28
5(2) (f)(ii)	Cutting and burning of the fire line (A -Class fire line)	11.88	8000	0.95	CCF & FD PTR Nagpur	PTR Nagpur	Paoni(U.C)	Chorabahuli	Bazarkund	556	N 21°31'11.34"	E79°10'44.91
5(2) (f)(ii)	Cutting and burning of the fire line (A -Class fire line)	11.88	8000	0.95	CCF & FD PTR Nagpur	PTR Nagpur	Paoni(U.C)	Chorabahuli	Bazarkund	735	N 21°30'32.28"	E79°12'02.67
5(2) (f)(ii)	Cutting and burning of the fire line (A -Class fire line)	11.88	8000	0.95	CCF & FD PTR Nagpur	PTR Nagpur	Paoni(U.C)	Paoni	Patharai	588	N 21°31'09.85"	E79°18'47.85"
5(2) (f)(ii)	Cutting and burning of the fire line (A -Class fire line)	11.88	8000	0.95	CCF & FD PTR Nagpur	PTR Nagpur	Paoni(U.C)	Paoni	Patharai	268	N 21°32'08.47"	E79°18'47.22"
5(2) (f)(ii)	Cutting and burning of the fire line (A -Class fire line)	11.88	8000	0.96	CCF & FD PTR Nagpur	PTR Nagpur	Paoni(U.C)	Paoni	Chargaon	585	N 21°32'47.03"	E79°18'15.06"
	Total	**297**		**23.76**								

Works proposed					Location of work						Latlong	
Rule No.	Item of work	Quantity	Rate	Amount (Rs. in Lakhs	Circle	Division	Range	Round	Beat	Compartment No	Latitude	Longitude
1	2	3	4	5	6	7	8	9	10	11	12	13
5(2) (f)(ii)	A Class Fire Line Cutting & Burning	6.5	0.09	0.59	FD PTR	BTR	Kuhi	Velgaon	Ranbodi N	1435 1436	N-20,52,32.43	E-79,26,5.35
5(2) (f)(ii)	A Class Fire Line Cutting& Burning	16	0.09	1.46	FD PTR	BTR	Kuhi	Velgaon	Wanoda	1413 1410 1365 1364	N-20,53,34.2	E-79,24,29.9
5(2) (f)(ii)	A Class Fire Line Cutting & Burning	7.5	0.09	0.68	FD PTR	BTR	Kuhi	Ranbodi	Tarna	1431 1433 1434	N-20,54,40.6	E-79,27,32.1
5(2) (f)(ii)	A Class Fire Line Cutting& Burning	3.7	0.09	0.34	FD PTR	BTR	Kuhi	Ranbodi	Chikana	1432 1437 1447	N-20,54,01.2	E-79,26,04.7
5(2) (f)(ii)	A Class Fire Line Cutting& Burning	4.3	0.09	0.39	FD PTR	BTR	Kuhi	Ranbodi	Marupar	1462 1463 1475	N-20,53,19.93	E-79,32,28.37
5(2) (f)(ii)	A Class Fire Line Cutting & Burning	5.5	0.09	0.50	FD PTR	BTR	Kuhi	Ranbodi	Velgaon N	1458 1457 1473	N-20,54,21.63	E-79,30,07.72
5(2) (f)(ii)	A Class Fire Line Cutting & Burning	7	0.09	0.64	FD PTR	BTR	Kuhi	Ranbodi	Velgaon S	1460 1459 1447	N-20,53,48.35	E-79,30,45.47
5(2) (f)(ii)	A Class Fire Line Cutting & Burning	7	0.09	0.64	FD PTR	BTR	Kuhi	Velgaon	Dhamana	1462 1463	N-20,51,59.3	E-79,27,26.8
5(2) (f)(ii)	A Class Fire Line Cutting & Burning	7.1	0.09	0.65	FD PTR	BTR	Kuhi	Velgaon	Chandala	1461 1474 758	N-20,53.25.35	E-79,29.39.39
5(2) (f)(ii)	B Class Fire Line Cutting & Burning	3.7	0.055	0.20	FD PTR	BTR	Kuhi	Ranbodi	Tarna	1435 1436	N-20,54,04.7	E-79,25,58.4
5(2) (f)(ii)	B Class Fire Line Cutting & Burning	2.4	0.055	0.13	FD PTR	BTR	Kuhi	Ranbodi	Tarna	1433 1434	N-20,53,34.1	E-79,24,59.2
5(2) (f)(ii)	B Class Fire Line Cutting & Burning	3	0.055	0.16	FD PTR	BTR	Kuhi	Ranbodi	Wanoda	1410 1435	N-20,53,34.2	E-79,23,29.2
5(2) (f)(ii)	B Class Fire Line Cutting & Burning	1.1	0.055	0.06	FD PTR	BTR	Kuhi	Ranbodi	Wanoda	1410	N-20,53,6.00	E-79,23.29.00
5(2) (f)(ii)	B Class Fire Line Cutting & Burning	3	0.055	0.16	FD PTR	BTR	Kuhi	Ranbodi	Wanoda	1434 1435 1464 1465	N-20,53,15.0	E-79, 25,46.8
5(2) (f)(ii)	B Class Fire Line Cutting & Burning	1.5	0.055	0.08	FD PTR	BTR	Kuhi	Ranbodi	Ranbodi N	1436	N-20,51,41.45	E-79,26,12.53
5(2) (f)(ii)	B Class Fire Line Cutting & Burning	4	0.055	0.22	FD PTR	BTR	Kuhi	Ranbodi	Ranbodi N	1436 1464	N-20,52,17.3	E-79,26,00.3
5(2) (f)(ii)	B Class Fire Line Cutting & Burning	4.6	0.055	0.25	FD PTR	BTR	Kuhi	Ranbodi	Ranbodi N	1432 1435 1436	N-20,52,27.57	E-79,26,52.91
5(2) (f)(ii)	B Class Fire Line Cutting & Burning	5	0.055	0.27	FD PTR	BTR	Kuhi	Ranbodi	Chikana	1432 1437	N-20,53,54.4	E-79,26,08.10
5(2) (f)(ii)	B Class Fire Line Cutting & Burning	3.4	0.055	0.19	FD PTR	BTR	Kuhi	Ranbodi	Chikana	1433 1436	N-20,52,36.8	E-79,26,12.9
5(2) (f)(ii)	B Class Fire Line Cutting & Burning	3.5	0.055	0.19	FD PTR	BTR	Kuhi	Velgaon	Dhamana	1448	N-20,53,08.3	E-79,28,03.0
5(2) (f)(ii)	B Class Fire Line Cutting & Burning	2.2	0.055	0.12	FD PTR	BTR	Kuhi	Velgaon	Dhamana	1448	N-20,52,33.0	E-79,28,28.5
5(2) (f)(ii)	B Class Fire Line Cutting & Burning	4.2	0.055	0.23	FD PTR	BTR	Kuhi	Velgaon	Dhamana	1448 1449	N-20,51,49.5	E-79,28.50
5(2) (f)(ii)	B Class Fire Line Cutting & Burning	1.8	0.055	0.10	FD PTR	BTR	Kuhi	Velgaon	Dhamana	1448	N-20,53,08.7	E-79,28,03.2

Works proposed					Location of work						Latlong	
Rule No.	Item of work	Quantity	Rate	Amount (Rs. in Lakhs	Circle	Division	Range	Round	Beat	Compartment No	Latitude	Longitude
1	2	3	4	5	6	7	8	9	10	11	12	13
5(2) (f)(ii)	B Class Fire Line Cutting & Burning	1.8	0.055	0.10	FD PTR	BTR	Kuhi	Velgaon	Dhamana	1448	N-20,53,19.8	E-79,28,57.5
5(2) (f)(ii)	B Class Fire Line Cutting & Burning	1.4	0.055	0.08	FD PTR	BTR	Kuhi	Velgaon	Marupar	1462	N-20,52,25.39	E-79,31,48.98
5(2) (f)(ii)	B Class Fire Line Cutting & Burning	3	0.055	0.16	FD PTR	BTR	Kuhi	Velgaon	Marupar	1463	N-20,53,31.88	E-79,31,36.90
5(2) (f)(ii)	B Class Fire Line Cutting & Burning	2.4	0.055	0.13	FD PTR	BTR	Kuhi	Velgaon	Marupar	1462 1475	N-20,52,01.08	E-79,31,16.70
5(2) (f)(ii)	B Class Fire Line Cutting & Burning	3.3	0.055	0.18	FD PTR	BTR	Kuhi	Velgaon	Velgaon S	1447 1449	N-20,53,01.4	E-79,29,28.4
5(2) (f)(ii)	B Class Fire Line Cutting & Burning	3.3	0.055	0.18	FD PTR	BTR	Kuhi	Velgaon	Velgaon S	1447 1460	N-20,53,23.7	E-79,28,58.1
5(2) (f)(ii)	B Class Fire Line Cutting & Burning	2.4	0.055	0.13	FD PTR	BTR	Kuhi	Velgaon	Velgaon S	1460	N-20,52,29.8	E-79,29,50.3
5(2) (f)(ii)	B Class Fire Line Cutting & Burning	0.7	0.055	0.04	FD PTR	BTR	Kuhi	Velgaon	Velgaon S	1459	N-20,53,56.5	E-79,30,00.0
5(2) (f)(ii)	B Class Fire Line Cutting & Burning	1.6	0.055	0.09	FD PTR	BTR	Kuhi	Velgaon	Chandala	1461	N-20,53,23.17	E-79,29,39.80
5(2) (f)(ii)	B Class Fire Line Cutting & Burning	1.9	0.055	0.10	FD PTR	BTR	Kuhi	Velgaon	Chandala	1461	N-20,52,55.11	E-79,30,10.08
5(2) (f)(ii)	B Class Fire Line Cutting & Burning	1.3	0.055	0.07	FD PTR	BTR	Kuhi	Velgaon	Chandala	1461	N-20,52,30.01	E-79,31,05.55
5(2) (f)(ii)	B Class Fire Line Cutting & Burning	1.7	0.055	0.09	FD PTR	BTR	Kuhi	Velgaon	Chandala	1474 758	N-20,52,01.03	E-79,31,17.04
5(2) (f)(ii)	B Class Fire Line Cutting & Burning	2.2	0.055	0.12	FD PTR	BTR	Kuhi	Velgaon	Chandala	1474 1461	N-20,51,53.68	E-79,32,00.44
5(2) (f)(ii)	B Class Fire Line Cutting & Burning	0.56	0.055	0.03	FD PTR	BTR	Kuhi	Velgaon	Chandala	1474	N-20,52,00.98	E-79,31,16.64
5(2) (f)(ii)	B Class Fire Line Cutting & Burning	0.63	0.055	0.03	FD PTR	BTR	Kuhi	Velgaon	Chandala	1461	N-20,52,01.38	E-79,31,07.57
5(2) (f)(ii)	B Class Fire Line Cutting & Burning	1.4	0.055	0.08	FD PTR	BTR	Kuhi	Velgaon	Chandala	1461	N-20,51,57.83	E-79,30,51.65
5(2) (f)(ii)	B Class Fire Line Cutting & Burning	4.9	0.055	0.27	FD PTR	BTR	Kuhi	Velgaon	Velgaon N	1458 1457 1473	N-20,54,51.31	E-79,30,28.34
5(2) (f)(ii)	B Class Fire Line Cutting & Burning	5.4	0.055	0.29	FD PTR	BTR	Kuhi	Velgaon	Velgaon N	1473 1457 1458	N-20,54,02.19	E-79,30,35.88
5(2) (f)(ii)	B Class Fire Line Cutting & Burning	3.1	0.055	0.17	FD PTR	BTR	Kuhi	Velgaon	Velgaon N	1458	N-20,54,30.78	E-79,30,55.34
5(2) (f)(ii)	B Class Fire Line Cutting & Burning	1.4011	0.055	0.08	FD PTR	BTR	Kuhi	Velgaon	Velgaon N	1473 1458	N-20,54,17,70	E-79,31,23.52
5(2) (f)(ii)	A Class Fire Line Cutting & Burning	87	0.09	7.83	PTR	BTR	Pauni	All Round	All Beat	1482/2,& 218, 229-391	N 20o50'34.49 N 20o50'37.30 N 20o47'36 N 20o46'26	E 79o34'11.10 E 79o34'49.96 E 79o34'09 E 79o34'53
5(2) (f)(ii)	B Class Fire Line Cutting & Burning	86	0.055	4.73	PTR	BTR	Pauni	All Round	All Beat	1482/2,& 218, 229-391	N 20o50'34.49 N 20o50'37.30 N 20o47'36 N 20o46'26	E 79o34'11.10 E 79o34'49.96 E 79o34'09 E 79o34'53

Works proposed					Location of work						Latlong	
Rule No.	Item of work	Quantity	Rate	Amount (Rs. in Lakhs	Circle	Division	Range	Round	Beat	Compartment No	Latitude	Longitude
1	2	3	4	5	6	7	8	9	10	11	12	13
5(2) (f)(ii)	Cutting and burning of the fire line Tas Beat (A -Class fire line 5.1 km@8000/km	5.10	0.08	0.41	FD PTR	BTR	Umred (WL)	Somnala	Tas	1440,1441,1452,1450,1451,1	N 20 48 10.62	E 079 28 56.66
5(2) (f)(ii)	Cutting and burning of the fire line Ranmangali Beat (A -Class fire line 6.9 km@8000/km	6.90	0.08	0.53	FD PTR	BTR	Umred (WL)	Somnala	Ranmagali	1440,1441,1442,359,360	N 20 49 34.05	E 079 26 36.01
5(2) (f)(ii)	Cutting and burning of the fire line Kitali Beat (A -Class fire line 2 km@8000/km	2.00	0.08	0.16	FD PTR	BTR	Umred (WL)	Somnala	Kitali	1466,357,358,1450,1451	N 20 49 48.53	E 079 29 3.45
5(2) (f)(ii)	Cutting and burning of the fire line Pullar Beat (A -Class fire line 10.1 km@8000/km	10.10	0.08	0.81	FD PTR	BTR	Umred (WL)	Somnala	Pullar	757,763,1464,1465,1466,357	N 20 51 1.55	E 079 28 33.59
5(2) (f)(ii)	Cutting and burning of the fire line Ranbodi East Beat (A -Class fire line 11.3 km@8000/km	11.30	0.08	0.91	FD PTR	BTR	Umred (WL)	Somnala	Ranbodi East	357,358,1438,1436,359	N 20 51 08.13	E 79 28 29.99
5(2) (f)(ii)	Cutting and burning of the fire line Navegaon Deshmukh Beat (A -Class fire line 4.82	4.82	0.08	0.39	FD PTR	BTR	Umred (WL)	Navegaon Deshmukh	Navegaon Deshmukh	360,1442,1439,1419	N 20 48 30.30	E 79 25 43.88
5(2) (f)(ii)	Cutting and burning of the fire line Thana Beat (A -Class fire line 17.4 km@8000/km	17.40	0.08	1.40	FD PTR	BTR	Umred (WL)	Navegaon Deshmukh	Thana	1415,1416,1417,1418,1419	N 20 48 20.02	E 079 24 43.73
5(2) (f)(ii)	Cutting and burning of the fire line Ranbodi South Beat (A -Class fire line 5.55 km@8000/km	5.55	0.08	0.45	FD PTR	BTR	Umred (WL)	Navegaon Deshmukh	Ranbodi South	359,360,361,362	N 20 51 39.29	E079 27 56.33
5(2) (f)(ii)	Cutting and burning of the fire line Karandala Beat (A -Class fire line 16.82 km@8000/km	16.82	0.08	1.35	FD PTR	BTR	Umred (WL)	Navegaon Deshmukh	Karandala	361,362,363,1415,1416	N 20 50 41	E079 24 54
5(2) (f)(ii)	Cutting and burning of the fire line Tas Beat (B -Class fire line 10.7 km@5000/km	10.70	0.05	0.54	FD PTR	BTR	Umred (WL)	Somnala	Tas	1452,1468	N 20 48 03.08	E 079 29 15.89
5(2) (f)(ii)	Cutting and burning of the fire line Ranmangali Beat (B -Class fire line 13 km@5000/km	13.00	0.05	0.65	FD PTR	BTR	Umred (WL)	Somnala	Ranmangali	1440,1441	N 20 48 42.00	E 79 26 08.17
5(2) (f)(ii)	Cutting and burning of the fire line Kitali Beat (B -Class fire line 18.5 km@5000/km	18.50	0.05	0.93	FD PTR	BTR	Umred (WL)	Somnala	Kitali	1450,1451	N 20 51 1.55	E 079 28 33.59
5(2) (f)(ii)	Cutting and burning of the fire line Pullar Beat (B -Class fire line 10.8 km@5000/km	10.80	0.05	0.54	FD PTR	BTR	Umred (WL)	Somnala	Pullar	757,763,1464,1465,1466	N 20 51 01.75	E 079 28 33.53
5(2) (f)(ii)	Cutting and burning of the fire line Ranbodi East Beat (B -Class fire line 9.4 km@5000/km	9.40	0.05	0.47	FD PTR	BTR	Umred (WL)	Somnala	Ranbodi East	357,358	N 20 50 56.83	E 079 27 14.37
5(2) (f)(ii)	Cutting and burning of the fire line Navegaon Deshmukh Beat (B -Class fire line 12	12.00	0.05	0.60	FD PTR	BTR	Umred (WL)	Navegaon Deshmukh	Navegaon Deshmukh	1439,1442	N 20 48 22.02	E 079 25 20.62
5(2) (f)(ii)	Cutting and burning of the fire line Thana Beat (B -Class fire line 15 km@5000/km	15.00	0.05	0.75	FD PTR	BTR	Umred (WL)	Navegaon Deshmukh	Thana	1417,1418,1419	N 20 48 20.02	E 079 24 43.73
5(2) (f)(ii)	Cutting and burning of the fire line Ranbodi South Beat (B -Class fire line 14.4 km@5000/km	14.40	0.05	0.72	FD PTR	BTR	Umred (WL)	Navegaon Deshmukh	Ranbodi South	359,361,362	N 20 51 12.1	E 079 26 14.7
5(2) (f)(ii)	Cutting and burning of the fire line Karandala Beat (B -Class fire line 16.01 km@5000/km	16.01	0.05	0.81	FD PTR	BTR	Umred (WL)	Navegaon Deshmukh	Karandala	363,1415,1416	N 20 50 44.39	E 79 24 14.99
5(2) (f)(ii)	Cutting and burning of the Electric Line 11Kv/33Kv line 4.1 km@17000/km	4.10	0.17	0.70	FD PTR	BTR	Umred (WL)	Navegaon Deshmukh	Thana,Navegaon Deshmukh	1417,1418,1439,1442	N 20 48 54.34	E 79 23 19.85
		529.29		**36.35**								

Works proposed					Location of work						Latlong	
Rule No.	Item of work	Quantity	Rate	Amount (Rs. in Lakhs	Circle	Division	Range	Round	Beat	Compartment No	Latitude	Longitude
1	2	3	4	5	6	7	8	9	10	11	12	13
5(2) (f)(ii)	Cutting and burning of fire lines	221.00	6751.13	14.92	FD NNTR	DD NNTR	Koka,		-		N - 21º 12' 59.54" N - 21º 12' 06.51" N - 21º 10' 31.58" N - 21º 12' 20.15" N - 21º 09' 34.47" N - 21º 10' 09.68" N - 21º 09' 43.20" N - 21º 08' 13.45" N - 21º 09' 29.62" N - 21º 08' 36.10" N - 21º 09' 34.81"	E-079º 50' 12.65" E-079º 51' 43.04" E-079º 50' 40.74" E-079º 48' 43.66" E-079º 48' 50.76" E-079º 51' 35.05" E-079º 52' 01.70" E-079º 54' 11.59" E-079º 45' 33.88" E-079º 46' 41.55" E-079º 45' 34.08"
					FD NNTR	DD NNTR	Umarzari				N - 21º 13' 55.34" N - 21º 12' 07.70" N - 21º 13' 32.78" N - 21º 13' 55.65" N - 21º 13' 29.72" N - 21º 13' 05.71" N - 21º 16' 03.06" N - 21º 17' 28.03" N - 21º 16' 36.07" N - 21º 16' 12.00" N - 21º 15' 11.98" N - 21º 13' 38.86" N - 21º 13' 40.02" N - 21º 13' 59.01" N - 21º 13' 39.12" N - 21º 15' 16.83"	E-079º 52' 59.26" E-079º 52' 35.49" E-079º 52' 27.56" E-079º 51' 59.91" E-079º 52' 30.66" E-079º 51' 57.44" E-079º 56' 13.00" E-079º 55' 39.06" E-079º 56' 07.03" E-079º 54' 12.03" E-079º 55' 14.14" E-079º 56' 57.08" E-079º 56' 56.50" E-079º 58' 32.83" E-079º 56' 57.42" E-079º 57' 53.34"
					FD NNTR	DD NNTR	pitezari				N - 21º 10' 53.25" N - 21º 21' 12.25" N - 21º 18' 92.02" N - 21º 13' 35.82" N - 21º 12' 18.13" N - 21º 11' 29.41" N - 21º 17' 62.84" N - 21º 10' 26.39" N - 21º 11' 35.82" N - 21º 01' 96.98" N - 21º 12' 20.65"	E-079º 48' 50.76" E-080º 03' 60.23" E-080º 02' 09.85" E-080º 02' 00.02" E-080º 02' 58.43" E-080º 01' 57.36" E-080º 01' 49.34" E-080º 00' 41.16" E-080º 01' 56.19" E-080º 03' 41.28" E-080º 02' 45.08"
5 (2) f (ii)	**Sub Total for Cutting and burning of fire lines**	**1047.29**		**75.03**								

Works proposed					Location of work						Latlong	
Rule No.	Item of work	Quantity	Rate	Amount (Rs. in Lakhs	Circle	Division	Range	Round	Beat	Compartment No	Latitude	Longitude
1	2	3	4	5	6	7	8	9	10	11	12	13
5(2) (f) (iii)	**Fire Watchers**											
5(2) (f) (iii)	Fire watchers (Fire watchers for 15 Feb to 31 March Each Range 10 Fire Watcher total 70 watchers	70 nos for 1.5 month	15472	10.83	FD PTR	PTR	East pench, West Pench, Chorbahuli, Deolapar, Saleghat, Paoni (UC), Nagalwadi					
5(2) (f) (iii)	Fire watchers (Fire watchers for 15 Feb 2022 to 15 June 2022 Range, 18 Fire Watcher(18MD*26D*4MONTH=1872)	1872.50	0.004	7.49	FD PTR	BTR	Umred (WL)	Somnala, Navegaon Deshmukh	Pullar, Ranbodi East, ,Kitali,Ranmangali,Karandala, Thana,Manora, Tas,Ranbodi South	757,763,1464, 1465,1461,357 ,358,1450,145 1,1440,1441,1 417,1418,1419 ,1452/1,1452/2 ,1442,359,361, 362		
5(2) (f) (iii)	Fire Protection Team Enggaged in 15 Feb To 15 Jun 2022	1560.00	0.00455	7.10	FD PTR	BTR	Kuhi	All Round	All Beat			
5(2) (f) (iii)	Fire Protection Team Enggaged in 15 Feb To 15 Jun 2022	1680.00	0.00455	7.64	FD PTR	BTR	Pauni	All Round	All Beat	1482/2,& 218, 229-391		
5(2) (f) (iii)	Fire watchers	3965 Tatal Mandays	450 Per Day Wages	17.84	FD NNTR	DD NNTR	Koka, Umarzari & pitezari	Total Fire watchers 3965 Man day				
5 (2) f (iii)	**Sub Total for Fire Watchers**			**50.90**								
5 (2) f	**Total for Forest Fire prevention and control operations**			**125.93**								
*	**Total for Forest Protection**			**459.48**								
5(2) (g)	**Soil and moisture conservation works in the forest**											
5(2) (g)	Gabian Bandhara	1	0.50	0.50	FD PTR	BTR	Kuhi	Velgaon	Velgaon S	1460	N-20,52,27.00	E-79,29,54.5
5(2) (g)	Gabian Bandhara	1	0.50	0.50	FD PTR	BTR	Kuhi	Velgaon	Chandala	1461	N-20,52,7.7	E-79,30.26.6
5(2) (g)	Gabian Bandhara	1	0.50	0.50	FD PTR	BTR	Kuhi	Velgaon	Marupar	1462	N-20,52,28.0	E-79,24,15.5
5(2) (g)	Gabian Bandhara	1	0.50	0.50	FD PTR	BTR	Kuhi	Velgaon	Dhamna	1438	N-20,52,11.0	E-79,27,18.1
5(2) (g)	Gabian Bandhara	1	0.50	0.50	FD PTR	BTR	Kuhi	Ranbodi	Ranbodi N	1436	N-20,52,3.6	E-79,30,5.27
5(2) (g)	Gabian Bandhara	1	0.50	0.50	FD PTR	BTR	Kuhi	Ranbodi	Chikna	1432	N-20,52,30.0	E-79,27,35.4
5(2) (g)	Construction of Gabian Structure	50	0.50	25.00	FD TATR	Buffer TATR	Palasgaon	Palasgaon	Gondmohadi	223	N 20 19 24 39	E 79 25 38 88
5(2) (g)	Construction of cement bandhara	5	15.00	75.00	FD TATR	Buffer TATR	Palasgaon	Palasgaon	Gondmohadi	223	N 20 19 34 27	E 79 26 0 14

Works proposed					Location of work						Latlong	
Rule No.	Item of work	Quantity	Rate	Amount (Rs. in Lakhs	Circle	Division	Range	Round	Beat	Compartment No	Latitude	Longitude
1	2	3	4	5	6	7	8	9	10	11	12	13
5(2) (g)	Construction of Cement Check Dam	1.00	-	16.00	C.F. & F.D. TATR C'pur	Sub DFO (WL) Alapalli	Choudampalli	Choudampalli	Dhannur	317	N 19 36 423	E 79 55 030
5(2) (g)	Creation of Natural Earthen ponds near water holes	1	3.00	3.00	FD PTR	PTR	East pench	South Salama	Totladoh	537	N21°39'14.27"	E79°13'35.72
5(2) (g)	Creation of Natural Earthen ponds near water holes	1	3.00	3.00	FD PTR	PTR	East pench	Sillari	Pipariya	566	N 21°34'34.02"	E79°15'14.16"
5(2) (g)	Creation of Natural Earthen ponds near water holes	1	3.00	3.00	FD PTR	PTR	East pench	Sillari	South Fulzari	546	N21°35'49.39"	E79°13'08.89"
5(2) (g)	Creation of Natural Earthen ponds near water holes	1	3.00	3.00	FD PTR	PTR	East pench	North Salama	East Chikhalkhari	511	N 21°40’52.31”	E 79°18’32.43”
5(2) (g)	Creation of Natural Earthen ponds near water holes	1	3.00	3.00	FD PTR	PTR	East pench	South Salama	North Salama	575	N 21°36’54.05”	E 79°18’32.43”
5(2) (g)	Creation of Natural Earthen ponds near water holes	1	3.00	3.00	FD PTR	PTR	west pench	Ghatpendhari	E.Ghatpendhari	676	N21°38'15.13"	E079°10'37.81"
5(2) (g)	Creation of Natural Earthen ponds near water holes	1	3.00	3.00	FD PTR	PTR	west pench	Ghatpendhari	W.Ghatpendhari	678	N21°38'38.35"	E079°10'55.49"
5(2) (g)	Creation of Natural Earthen ponds near water holes	1	3.00	3.00	FD PTR	PTR	west pench	Kolitmara	Surera	666	N21°37'34.28"	E079°10'56.29"
5(2) (g)	Creation of Natural Earthen ponds near water holes	1	3.00	3.00	FD PTR	PTR	west pench	Kolitmara	Surera	667	N21°37'06.41"	E079°12'33.71"
5(2) (g)	Creation of Natural Earthen ponds near water holes	1	3.00	3.00	FD PTR	PTR	Paoni(U.C)	Chorabahuli	Bazarkund	556	N 21°31'11.34"	E79°10'44.91
5(2) (g)	Creation of Natural Earthen ponds near water holes	1	3.00	3.00	FD PTR	PTR	Paoni(U.C)	Chorabahuli	Bazarkund	735	N 21°30'32.28"	E79°12'02.67
5(2) (g)	Creation of Natural Earthen ponds near water holes	1	3.00	3.00	FD PTR	PTR	Paoni(U.C)	Paoni	Patharai	588	N 21°31'09.85"	E79°18'47.85"
5(2) (g)	Creation of Natural Earthen ponds near water holes	1	3.00	3.00	FD PTR	PTR	Paoni(U.C)	Paoni	Patharai	268	N 21°32'08.47"	E79°18'47.22"
5(2) (g)	Creation of Natural Earthen ponds near water holes	1	3.00	3.00	FD PTR	PTR	Nagalwadi	Surewani	South Surewani	650	N21°32’17.08	E79°59’55.61
5(2) (g)	Creation of Natural Earthen ponds near water holes	1	3.00	3.00	FD PTR	PTR	Nagalwadi	Ambazari	Banera	727	N21°13’14.80”	E79°08’35.90
5(2) (g)	Creation of Natural Earthen ponds near water holes	1	3.00	3.00	FD PTR	PTR	Nagalwadi	Suvardhara	Hattikheda	628	N21°28’40.49’’	E79°04’43.15’’
5(2) (g)	Creation of Natural Earthen ponds near water holes	1	3.00	3.00	FD PTR	PTR	Nagalwadi	Suvardhara	Mohgaon	634	N21°28’08’20	E79°01’39.28
5(2) (g)	Creation of Natural Earthen ponds near water holes	1	3.00	3.00	FD PTR	PTR	Saleghat	Saleghat	S. Saleghat	642	N21°30'23.30"	E079°02'40.08"
5(2) (g)	Creation of Natural Earthen ponds near water holes	1	3.00	3.00	FD PTR	PTR	Saleghat	Saleghat	Ambazari	624	N21°30'47.69"	E079°05'28.21"
5(2) (g)	Creation of Natural Earthen ponds near water holes	1	3.00	3.00	FD PTR	PTR	Saleghat	Saleghat	Ambazari	645	N21°31'40.21"	E079°04'34.90"
5(2) (g)	Creation of Natural Earthen ponds near water holes	1	3.00	3.00	FD PTR	PTR	Saleghat	Dhavlapur	Dhavlapur	659	N21°32'22.94"	E079°05'07.48"
5 (2) g	**Total for Soil and moisture conservation works in the forest**	**83.00**		**182.00**								

Works proposed					Location of work						Latlong	
Rule No.	**Item of work**	**Quantity**	**Rate**	**Amount (Rs. in Lakhs**	**Circle**	**Division**	**Range**	**Round**	**Beat**	**Compartment No**	**Latitude**	**Longitude**
1	**2**	**3**	**4**	**5**	**6**	**7**	**8**	**9**	**10**	**11**	**12**	**13**
	Wildlife Management & Man-animal conflict mitigation.											
5(2) (i)	**Improvement of wildlife habitat as provided in the approved wildlife management plan or working plan**											
5(2) (i) (ii)	**Meadow development**											
5(2) (i) (ii)	Meadow development work	17	0.50	8.50	FD PTR	PTR Nagpur	Nagalwadi	Ambazari	Banera	733	N 21°31'36.77"	E 79°08'13.35
5(2) (i) (ii)	Meadow development work	16	0.50	8.00	FD PTR	PTR Nagpur	Saleghat	Saleghat	South Saleghat	642	N 21°30'26.32"	E 79°02'10.79"
5(2) (i) (ii)	Meadow development work	17	0.50	8.50	FD PTR	PTR Nagpur	Paoni(U.C)	Chorabahuli	Bazarkund	556	N 21°31'11.34'	E79°10'44.91
		50		**25.00**								
5(2) (i) (ii)	Meadows Development Work	50	0.30	15.00	PTR	BTR	Kuhi	Ranbodi	Ranbodi N	Aqcuire Land	N-20,51,51.95	E-79,26,18.2
5(2) (i) (ii)	Levelling of Bunds in Aqcuired Land of Ranbodi & Kitadi	52.37	0.29	15.00	PTR	BTR	Kuhi	Ranbodi	Ranbodi N	Aqcuire Land	N-20,51,50.90	E-79,26,5.78
		102.37		**30.00**								
5(2) (i) (ii)	Meadow Development			50.00	FD TATR	Buffer TATR	Chandrapur	Mamla	Mamla	381	N 20 3 24 34	E 79 23 40 26
5(2) (i) (ii)	Meadow Development	5.00	--	0.24	FD TATR	Core TATR	Kolsa	Kolsa	Pahami	306	N20° 08'42.6"	E079° 26'42.3"
5(2) (i) (ii)	Meadow Development	6.00	--	0.30	FD TATR	Core TATR	Kolsa	Kolsa	Pahami	338	N20° 07'32.1"	E079° 26'50.9"
5(2) (i) (ii)	Meadow Development	11.00	--	0.54	FD TATR	Core TATR	Kolsa	Kolsa	Botezari	311	N20° 10'14.3"	E079° 27'12.8"
5(2) (i) (ii)	Meadow Development	27.50	--	1.34	FD TATR	Core TATR	Kolsa	Kolsa	Botezari	308/309	N20° 11'18.7"	E079° 26'43.6"
5(2) (i) (ii)	Meadow Development	3.00	--	0.14	FD TATR	Core TATR	Kolsa	Kolsa	Botezari	309	N20° 11'18.7"	E079° 26'43.6"
5(2) (i) (ii)	Meadow Development	6.00	--	0.30	FD TATR	Core TATR	Kolsa	Kolsa	Botezari	309	N20° 11'18.7"	E079° 26'43.6"
5(2) (i) (ii)	Meadow Development	6.00	--	0.30	FD TATR	Core TATR	Kolsa	Pangadi	Zari	342	N20° 07'20.5"	E079° 29'36.4"
5(2) (i) (ii)	Meadow Development	4.50	--	0.38	FD TATR	Core TATR	Kolsa	Kolsa	Botezari	308/309	N20° 11'18.7"	E079° 26'43.6"
5(2) (i) (ii)	Meadow Development	20.00	--	0.98	FD TATR	Core TATR	Moharli	Moharli	Ashtakoni	146	N20° 14'10.6"	E079° 22'73.6"
5(2) (i) (ii)	Meadow Development	10.00	--	0.48	FD TATR	Core TATR	Moharli	Moharli	Ashtakoni	148	N20° 13'00.2"	E079°21'47.7"

Works proposed					Location of work						Latlong	
Rule No.	Item of work	Quantity	Rate	Amount (Rs. in Lakhs	Circle	Division	Range	Round	Beat	Compartment No	Latitude	Longitude
1	2	3	4	5	6	7	8	9	10	11	12	13
5(2) (i) (ii)	Meadow Development	10.00	--	0.48	FD TATR	Core TATR	Moharli	Moharli	Andhari	150	N20° 11'38.2"	E079°21'03.1"
5(2) (i) (ii)	Meadow Development	7.00	--	0.34	FD TATR	Core TATR	Moharli	Moharli	Andhari	151	N20° 11'08.1"	E079°23'05.1"
5(2) (i) (ii)	Meadow Development	13.00	--	0.64	FD TATR	Core TATR	Moharli	Devada	Girghat	157	N20° 08'51.7"	E079°24'14.7"
5(2) (i) (ii)	Meadow Development	12.00	--	0.58	FD TATR	Core TATR	Moharli	Devada	Girghat	158	N20° 08'27.9"	E079°24'31.2"
5(2) (i) (ii)	Meadow Development	2.00	--	0.10	FD TATR	Core TATR	Moharli	Devada	Girghat	158	N20° 08'36.3"	E079°24'11.6"
5(2) (i) (ii)	Meadow Development	20.00	--	0.98	FD TATR	Core TATR	Moharli	Devada	Girghat	158	N20° 08'07.7"	E079°24'45.0"
5(2) (i) (ii)	Meadow Development	11.00	--	0.54	FD TATR	Core TATR	Moharli	Devada	Girghat	157	N20° 08'54.6"	E079°24'14.5"
5(2) (i) (ii)	Meadow Development	85.00	--	4.15	FD TATR	Core TATR	Moharli	Palasgaon	Palasgaon	PF	N20° 16'48.9"	E079°21'23.7"
5(2) (i) (ii)	Meadow Development	10.00	--	0.48	FD TATR	Core TATR	Moharli	Moharli	Palasgaon	128	N20° 16'43.6"	E079°20'41.8"
5(2) (i) (ii)	Meadow Development	5.00	--	0.24	FD TATR	Core TATR	Moharli	Khatoda	Devdoha	127	N20° 16'24.9"	E079°20'36.1"
5(2) (i) (ii)	Meadow Development	20.00	--	0.98	FD TATR	Core TATR	Karwa	Rantoldhi	Zinganot-2	302	N20°10'42.2"	E79°24'47.9"
5(2) (i) (ii)	Meadow Development	5.00	--	0.24	FD TATR	Core TATR	Karwa	Karwa	Chipalaghat	295	N20°14'36.9"	E79°22'53.5"
5(2) (i) (ii)	Meadow Development	5.00	--	0.24	FD TATR	Core TATR	Karwa	Karwa	Chipalaghat	295	N20°15'12.9"	E79°22'93.1"
5(2) (i) (ii)	Meadow Development	15.00	--	0.74	FD TATR	Core TATR	Karwa	Karwa	Anandgaon	264	N20°16'09.3"	E79°27'24.5"
5(2) (i) (ii)	Meadow Development	10.00	--	0.48	FD TATR	Core TATR	Karwa	Piperheti	Uapashya	277	N20°11'39.1"	E79°31'14.5"
5(2) (i) (ii)	Meadow Development	275.00	--	13.43	FD TATR	Core TATR	Kolara	Kolara	Navegaon	50	N20˚25'21.03	E079˚16'74.00
5(2) (i) (ii)	Meadow Development	47.00	--	2.30	FD TATR	Core TATR	Kolara	Jamni	Jamni	PF	N20˚20'52.07	E079˚20'57.09
5(2) (i) (ii)	Meadow Development	8.00	--	0.40	FD TATR	Core TATR	Kolara	Jamni	Jamni	PF	N20˚20'52.07	E079˚20'54.06
5(2) (i) (ii)	Meadow Development	10.00	--	0.48	FD TATR	Core TATR	Kolara	Jamni	Jamni	PF	N20˚17'00.03	E079˚20'25.08
5(2) (i) (ii)	Meadow Development	12.00	--	0.58	FD TATR	Core TATR	Kolara	Jamni	Jamni	PF	N20˚19'28.04	E079˚19'57.02
5(2) (i) (ii)	Meadow Development	10.00	--	0.48	FD TATR	Core TATR	Kolara	Jamni	Jamni	110/122	N20˚17'43.02	E079˚20'42.01
5(2) (i) (ii)	Meadow Development	30.00	--	1.46	FD TATR	Core TATR	Kolara	Jamni	Pandharpouni	93	N20˚22'23.03	E079˚17'94.06

Works proposed					Location of work						Latlong	
Rule No.	**Item of work**	**Quantity**	**Rate**	**Amount (Rs. in Lakhs**	**Circle**	**Division**	**Range**	**Round**	**Beat**	**Compartment No**	**Latitude**	**Longitude**
1	**2**	**3**	**4**	**5**	**6**	**7**	**8**	**9**	**10**	**11**	**12**	**13**
5(2) (i) (ii)	Meadow Development	10.00		0.49	FD TATR	Core TATR	Tadoba	Katezari	Khutwanda	123	N20°22'31.05	E079°17'94.01
5(2) (i) (ii)	Bamboo and Mix Plantation (Model No.5)	10.00	8.01 Lac/ha	80.10	FD TATR	Sub DFO (WL) Alapalli	Choudampalli	Choudampalli	Dhannur	318	N 19 35 547	E 79 54 850
5(2) (i) (ii)	Bamboo and Mix Plantation (Model No.5)	10.00	8.01 Lac/ha	80.10	FD TATR	Sub DFO (WL) Alapalli	Choudampalli	Choudampalli	Dhannur	315	N 19 36 723	E 79 55 268
5(2) (i) (ii)	Bamboo and Mix Plantation (Model No.5)	15.00	8.01 Lac/ha	120.15	FD TATR	Sub DFO (WL) Alapalli	Choudampalli	Choudampalli	Dhannur	293	N 19 32 174	E 79 53 180
5(2) (i) (ii)	Bamboo and Mix Plantation (Model No.5)	10.00	8.01 Lac/ha	80.10	FD TATR	Sub DFO (WL) Alapalli	Choudampalli	Choudampalli	Lagam	292	N 19 33 636	E 79 52 381
		776.00		**446.28**								
5(2) (i) (ii)	Meadow devlopment and Maintance work	110		11.00	FD NNTR	DD NNTR	Navegaon	-	-	5 & 7	N-21,00,56.85	E-080,09,14.41
5(2) (i) (ii)	Meadow devlopment work	40		50.00	FD NNTR	DD NNTR	Navegaon	-	-	5	N-21,00,14.25	E-080,08,42.19
		150		**61.00**								
5 (2) i (ii)	**Sub Total for Meadow development**	**1078.37**		**562.28**								
5(2) (i) (iii)	**Creation & maintenance of water source/ water hole for wild life**											
5(2) (i)(iii)	Creation and maintenance of Low cost natural water hole	1	0.30	0.30	FD PTR	PTR	East pench	South Salama	Totladoh	537	N21°39'14.27'	E79°13'35.72
5(2) (i)(iii)	Creation and maintenance of Low cost natural water hole	1	0.30	0.30	FD PTR	PTR	East pench	Sillari	Pipariya	566	N 21°34'34.02"	E79°15'14.16"
5(2) (i)(iii)	Creation and maintenance of Low cost natural water hole	1	0.30	0.30	FD PTR	PTR	East pench	Sillari	Pipariya	566	N 21°34'34.02"	E79°15'14.16"
5(2) (i)(iii)	Creation and maintenance of Low cost natural water hole	1	0.30	0.30	FD PTR	PTR	East pench	Sillari	South Fulzari	546	N21°35'49.39"	E79°13'08.89"
5(2) (i)(iii)	Creation and maintenance of Low cost natural water hole	1	0.30	0.30	FD PTR	PTR	East pench	Sillari	South Fulzari	546	N21°35'49.39"	E79°13'08.89"
5(2) (i)(iii)	Creation and maintenance of Low cost natural water hole	1	0.30	0.30	FD PTR	PTR	East pench	North Salama	East Chikhalkhari	511	N 21°40’52.31”	E 79°18’32.43”
5(2) (i)(iii)	Creation and maintenance of Low cost natural water hole	1	0.30	0.30	FD PTR	PTR	East pench	North Salama	East Chikhalkhari	511	N 21°40’52.31”	E 79°18’32.43”
5(2) (i)(iii)	Creation and maintenance of Low cost natural water hole	1	0.30	0.30	FD PTR	PTR	East pench	South Salama	North Salama	575	N 21°36’54.05”	E 79°18’32.43”
5(2) (i)(iii)	Creation and maintenance of Low cost natural water hole	1	0.30	0.30	FD PTR	PTR	East pench	South Salama	North Salama	575	N 21°36’54.05”	E 79°18’32.43”
5(2) (i)(iii)	Creation and maintenance of Low cost natural water hole	1	0.30	0.30	FD PTR	PTR	west pench	Ghatpendhari	E.Ghatpendhari	676	N21°38'15.13"	E079°10'37.81"
5(2) (i)(iii)	Creation and maintenance of Low cost natural water hole	1	0.30	0.30	FD PTR	PTR	west pench	Ghatpendhari	E.Ghatpendhari	676	N21°38'15.13"	E079°10'37.81"
5(2) (i)(iii)	Creation and maintenance of Low cost natural water hole	1	0.30	0.30	FD PTR	PTR	west pench	Ghatpendhari	W.Ghatpendhari	678	N21°38'38.35"	E079°10'55.49"
5(2) (i)(iii)	Creation and maintenance of Low cost natural water hole	1	0.30	0.30	FD PTR	PTR	west pench	Kolitmara	Surera	666	N21°37'34.28"	E079°10'56.29"

Works proposed					Location of work						Latlong	
Rule No.	Item of work	Quantity	Rate	Amount (Rs. in Lakhs	Circle	Division	Range	Round	Beat	Compartment No	Latitude	Longitude
1	2	3	4	5	6	7	8	9	10	11	12	13
5(2) (i)(iii)	Creation and maintenance of Low cost natural water hole	1	0.30	0.30	FD PTR	PTR	west pench	Kolitmara	Surera	666	N21°37'34.28"	E079°10'56.29"
5(2) (i)(iii)	Creation and maintenance of Low cost natural water hole	1	0.30	0.30	FD PTR	PTR	west pench	Kolitmara	Surera	667	N21°37'06.41"	E079°12'33.71"
5(2) (i)(iii)	Creation and maintenance of Low cost natural water hole	1	0.30	0.30	FD PTR	PTR	west pench	Kolitmara	Surera	667	N21°37'06.41"	E079°12'33.71"
5(2) (i)(iii)	Creation and maintenance of Low cost natural water hole	1	0.30	0.30	FD PTR	PTR	Paoni(U.C)	Chorabahuli	Bazarkund	556	N 21°31'11.34'	E79°10'44.91
5(2) (i)(iii)	Creation and maintenance of Low cost natural water hole	1	0.30	0.30	FD PTR	PTR	Paoni(U.C)	Chorabahuli	Bazarkund	556	N 21°31'11.34'	E79°10'44.91
5(2) (i)(iii)	Creation and maintenance of Low cost natural water hole	1	0.30	0.30	FD PTR	PTR	Paoni(U.C)	Chorabahuli	Bazarkund	735	N 21°30'32.28	E79°12'02.67
5(2) (i)(iii)	Creation and maintenance of Low cost natural water hole	1	0.30	0.30	FD PTR	PTR	Paoni(U.C)	Chorabahuli	Bazarkund	735	N 21°30'32.28	E79°12'02.67
5(2) (i)(iii)	Creation and maintenance of Low cost natural water hole	1	0.30	0.30	FD PTR	PTR	Paoni(U.C)	Chorabahuli	Bazarkund	735	N 21°30'32.28	E79°12'02.67
5(2) (i)(iii)	Creation and maintenance of Low cost natural water hole	1	0.30	0.30	FD PTR	PTR	Paoni(U.C)	Paoni	Patharai	588	N 21°31'09.85"	E79°18'47.85"
5(2) (i)(iii)	Creation and maintenance of Low cost natural water hole	1	0.30	0.30	FD PTR	PTR	Paoni(U.C)	Paoni	Patharai	268	N 21°32'08.47"	E79°18'47.22"
5(2) (i)(iii)	Creation and maintenance of Low cost natural water hole	1	0.30	0.30	FD PTR	PTR	Nagalwadi	Surewani	South Surewani	650	N21°32’17.08	E79°59’55.61
5(2) (i)(iii)	Creation and maintenance of Low cost natural water hole	1	0.30	0.30	FD PTR	PTR	Nagalwadi	Surewani	South Surewani	650	N21°32’17.08	E79°59’55.61
5(2) (i)(iii)	Creation and maintenance of Low cost natural water hole	1	0.30	0.30	FD PTR	PTR	Nagalwadi	Ambazari	Banera	727	N21°13’14.80”	E79°08’35.90
5(2) (i)(iii)	Creation and maintenance of Low cost natural water hole	1	0.30	0.30	FD PTR	PTR	Nagalwadi	Ambazari	Banera	727	N21°13’14.80”	E79°08’35.90
5(2) (i)(iii)	Creation and maintenance of Low cost natural water hole	1	0.30	0.30	FD PTR	PTR	Nagalwadi	Suvardhara	Hattikheda	628	N21°28’40.49’’	E79°04’43.15’’
5(2) (i)(iii)	Creation and maintenance of Low cost natural water hole	1	0.30	0.30	FD PTR	PTR	Nagalwadi	Suvardhara	Hattikheda	628	N21°28’40.49’’	E79°04’43.15’’
5(2) (i)(iii)	Creation and maintenance of Low cost natural water hole	1	0.30	0.30	FD PTR	PTR	Nagalwadi	Suvardhara	Mohgaon	634	N21°28’08’20	E79°01’39.28
5(2) (i)(iii)	Creation and maintenance of Low cost natural water hole	1	0.30	0.30	FD PTR	PTR	Nagalwadi	Suvardhara	Mohgaon	634	N21°28’08’20	E79°01’39.28
5(2) (i)(iii)	Creation and maintenance of Low cost natural water hole	1	0.30	0.30	FD PTR	PTR	Saleghat	Saleghat	S. Saleghat	642	N21°30'23.30"	E079°02'40.08"
5(2) (i)(iii)	Creation and maintenance of Low cost natural water hole	1	0.30	0.30	FD PTR	PTR	Saleghat	Saleghat	S. Saleghat	642	N21°30'23.30"	E079°02'40.08"
5(2) (i)(iii)	Creation and maintenance of Low cost natural water hole	1	0.30	0.30	FD PTR	PTR	Saleghat	Saleghat	Ambazari	624	N21°30'47.69"	E079°05'28.21"
5(2) (i)(iii)	Creation and maintenance of Low cost natural water hole	1	0.30	0.30	FD PTR	PTR	Saleghat	Saleghat	Ambazari	624	N21°30'47.69"	E079°05'28.21"
5(2) (i)(iii)	Creation and maintenance of Low cost natural water hole	1	0.30	0.30	FD PTR	PTR	Saleghat	Saleghat	Ambazari	645	N21°31'40.21"	E079°04'34.90"
5(2) (i)(iii)	Creation and maintenance of Low cost natural water hole	1	0.30	0.30	FD PTR	PTR	Saleghat	Saleghat	Ambazari	645	N21°31'40.21"	E079°04'34.90"

Works proposed					Location of work						Latlong	
Rule No.	**Item of work**	**Quantity**	**Rate**	**Amount (Rs. in Lakhs**	**Circle**	**Division**	**Range**	**Round**	**Beat**	**Compartment No**	**Latitude**	**Longitude**
1	**2**	**3**	**4**	**5**	**6**	**7**	**8**	**9**	**10**	**11**	**12**	**13**
5(2) (i)(iii)	Creation and maintenance of Low cost natural water hole	1	0.30	0.30	FD PTR	PTR	Saleghat	Dhavlapur	Dhavlapur	659	N21°32'22.94"	E079°05'07.48"
5(2) (i)(iii)	Creation and maintenance of Low cost natural water hole	1	0.30	0.30	FD PTR	PTR	Deolapar	Khapa	Khapa	Khapa 577	N21°36'28.40	E79°19'10.29"
5(2) (i)(iii)	Creation and maintenance of Low cost natural water hole	1	0.30	0.30	FD PTR	PTR	Deolapar	Khapa	Khapa	Khapa 577	N21°36'28.40	E79°19'10.29"
5(2) (i)(iii)	Creation and maintenance of Low cost natural water hole	1	0.30	0.30	FD PTR	PTR	Deolapar	Deolapar	Garra	Khursapar 500	N21°40'08.30	E79°22'12.41"
5(2) (i)(iii)	Creation and maintenance of Low cost natural water hole	1	0.30	0.30	FD PTR	PTR	Deolapar	Deolapar	Garra	Khursapar 500	N21°40'08.30	E79°22'12.41"
5(2) (i)(iii)	Creation and maintenance of Low cost natural water hole	1	0.30	0.30	FD PTR	PTR	Deolapar	Deolapar	Bandra	Bandra, 498	N21°39'12.18	E79°22'04.39"
5(2) (i)(iii)	Creation and maintenance of Low cost natural water hole	1	0.30	0.30	FD PTR	PTR	Deolapar	Khapa	Usaripar	,Usripar 504	N21°38'10.09	E79°20'14.56"
5(2) (i)(iii)	Creation and maintenance of Low cost natural water hole	1	0.30	0.30	FD PTR	PTR	Deolapar	Deolapar	Sawara	Sawara 495	N21°36'57.77	E79°22'29.80"
5(2) (i)(iii)	Creation and maintenance of Low cost natural water hole	1	0.30	0.30	FD PTR	PTR	Chorbahuli	Chorbahuli	Chorbahuli	591	N 21°27'52.94	E 79°18'40.30"
5(2) (i)(iii)	Creation and maintenance of Low cost natural water hole	1	0.30	0.30	FD PTR	PTR	Chorbahuli	Chorbahuli	Chorbahuli	591	. N 21°27’48.4”	E 79°187’06.85”
5(2) (i)(iii)	Creation and maintenance of Low cost natural water hole	1	0.30	0.30	FD PTR	PTR	Chorbahuli	Chorbahuli	Chorbahuli	591	N 21°27'52.94	\E 79°18'40.30"
5(2) (i)(iii)	Creation and maintenance of Low cost natural water hole	1	0.30	0.30	FD PTR	PTR	Chorbahuli	Chorbahuli	Deoli	608	N 21°28'57.92"	E79°13'01.50"
5(2) (i)(iii)	Creation and maintenance of Low cost natural water hole	1	0.30	0.30	FD PTR	PTR	Chorbahuli	Chorbahuli	Deoli	608	N 21°28'57.92'	E79°13'01.50"
		50		**15.00**								
5(2) (i)(iii)	Creation and maintenace of Low cost natural water hole	1	0.25	0.25	FD PTR	BTR	Pauni	Pauni	Pauni	306	N 20o48'16.60	E 79o36'47.76
5(2) (i)(iii)	Creation and maintenace of Low cost natural water hole	1	0.25	0.25	FD PTR	BTR	Pauni	Pauni	Pauni	306	N 20o48'16.60	E 79o36'47.76
5(2) (i)(iii)	Creation and maintenace of Low cost natural water hole	1	0.25	0.25	FD PTR	BTR	Pauni	Pauni	Gaidongari	218	N 20o50'12.14	E 79o34'15.02
5(2) (i)(iii)	Creation and maintenace of Low cost natural water hole	1	0.25	0.25	FD PTR	BTR	Pauni	Pauni	Mahalgaon	305	N 20o49'16.91	E 79o34'18.78
5(2) (i)(iii)	Creation and maintenace of Low cost natural water hole	1	0.25	0.25	FD PTR	BTR	Pauni	Pauni	kormbhi	303	N 20o50'44.44	E 79o35'45.41
5(2) (i)(iii)	Creation and maintenace of Low cost natural water hole	1	0.25	0.25	FD PTR	BTR	Pauni	Nimgaon	Jogikheda	229	N 20o47'29	E 79o34'55
5(2) (i)(iii)	Creation and maintenace of Low cost natural water hole	1	0.25	0.25	FD PTR	BTR	Pauni	Nimgaon	Chichgaon	224	N 20o47'51.00	E 79o34'32.00
5(2) (i)(iii)	Creation and maintenace of Low cost natural water hole	1	0.25	0.25	FD PTR	BTR	Pauni	Nimgaon	Ranai	392	N 20o45'34	E 79o33'54
		8		**2.00**								
5 (2) i (iii)	**Sub Total for Creation & maintenance of water source/ water hole for wild life**	**58**		**17.00**								

Works proposed					Location of work						Latlong	
Rule No.	Item of work	Quantity	Rate	Amount (Rs. in Lakhs	Circle	Division	Range	Round	Beat	Compartment No	Latitude	Longitude
1	2	3	4	5	6	7	8	9	10	11	12	13
5(2)(i) (iv)	**Eradication of invacive species**											
5(2)(i) (iv)	Remolve of Lantana and Other Weed Species	20	0.25	5.00	FD PTR	PTR	west pench	Ghatpendhari	West Ghatpendhari	678	N 21°37’59.54”	E 79°10’40.36”
5(2)(i) (iv)	Remolve of Lantana and Other Weed Species	10	0.25	2.50	FD PTR	PTR	west pench	Ghatpendhari	East Ghatpendhari	676	N 21°38’39.28”	E 79°10’48.52
5(2)(i) (iv)	Remolve of Lantana and Other Weed Species	10	0.25	2.50	FD PTR	PTR	west pench	Ghatpendhari	South Ghatpendhari	679	N 21°37’28.21”	E 79°11’12.09”
5(2)(i) (iv)	Remolve of Lantana and Other Weed Species	10	0.25	2.50	FD PTR	PTR	west pench	Ghatpendhari	South Ghatpendhari	672	N 21°37’18.30”	E 79°12’22.91”
5(2)(i) (iv)	Remolve of Lantana and Other Weed Species	10	0.25	2.50	FD PTR	PTR	west pench	Ghatpendhari	South Ghatpendhari	681	N 21°36’50.86”	E 79°10’58.20”
5(2)(i) (iv)	Remolve of Lantana and Other Weed Species	10	0.25	2.50	FD PTR	PTR	west pench	Kolitmara	Surera	666	N 21°33’44.8”	E 79°09’39.85’’
5(2)(i) (iv)	Remolve of Lantana and Other Weed Species	10	0.25	2.50	FD PTR	PTR	west pench	Narhar	East Narhar	663	N 21°34’10.59	E 79°08’47.32’’
5(2)(i) (iv)	Remolve of Lantana and Other Weed Species	10	0.25	2.50	FD PTR	PTR	west pench	Narhar	East Narhar	687	N 21°35’14.99”	E 79°08’39.10”
5(2)(i) (iv)	Remolve of Lantana and Other Weed Species	10	0.25	2.50	FD PTR	PTR	west pench	KOlitmara	Surera	667	N 21°34’43.45”	E 79°09’39.85”
5(2)(i) (iv)	Remolve of Lantana and Other Weed Species	10	0.25	2.50	FD PTR	PTR	Saleghat	Saleghat	Ambazari	624	N 21°30’47.59”	E 79°05’17.32”
5(2)(i) (iv)	Remolve of Lantana and Other Weed Species	10	0.25	2.50	FD PTR	PTR	Saleghat	Saleghat	Ambazari	645	N 21°31’40.59	E 79°04’23.25
5(2)(i) (iv)	Remolve of Lantana and Other Weed Species	10	0.25	2.50	FD PTR	PTR	Saleghat	Saleghat	South Saleghat	642	N 21°30’26.32”	E 79°02’10.79”
5(2)(i) (iv)	Remolve of Lantana and Other Weed Species	10	0.25	2.50	FD PTR	PTR	Saleghat	Saleghat	Pathar	643	N 21°30’12.64’’	E 79°03’27.07’’
5(2)(i) (iv)	Remolve of Lantana and Other Weed Species	10	0.25	2.50	FD PTR	PTR	Saleghat	Dhavalapur	Dhavalapur	659	N 21°33’13.98’’	E 79°05’18.98”
5(2)(i) (iv)	Remolve of Lantana and Other Weed Species	20	0.25	5.00	FD PTR	PTR	Nagalwadi	Surewani	South Surewani	650	N 21°32’04.67”	E 79°00’09.45”
5(2)(i) (iv)	Remolve of Lantana and Other Weed Species	20	0.25	5.00	FD PTR	PTR	Nagalwadi	Ambazari	Banera	733	N 21°31’36.77”	E 79°08’13.35
5(2)(i) (iv)	Remolve of Lantana and Other Weed Species	10	0.25	2.50	FD PTR	PTR	Nagalwadi	Suvardhara	Hattikheda	628	N 21°28’16.98”	E 79°04’10.24”
5(2)(i) (iv)	Remolve of Lantana and Other Weed Species	50	0.25	12.50	FD PTR	PTR	Chorbahuli	Kirangisara	Tuyapar East	604	N21°45'78.31"	E79°30'38'94"
5(2)(i) (iv)	Remolve of Lantana and Other Weed Species	50	0.25	12.50	FD PTR	PTR	Paoni (UC),	Paoni	Pathrai	589	N21°54'54.12"	E79°32'71.13"
5(2)(i) (iv)	Remolve of Lantana and Other Weed Species	50	0.25	12.50	FD PTR	PTR	Deolapar	Deolapar	Bandra	498	N21°57'22.34"	E79°36'15.21"
		350		**87.50**								

Works proposed					Location of work						Latlong	
Rule No.	**Item of work**	**Quantity**	**Rate**	**Amount (Rs. in Lakhs**	**Circle**	**Division**	**Range**	**Round**	**Beat**	**Compartment No**	**Latitude**	**Longitude**
1	**2**	**3**	**4**	**5**	**6**	**7**	**8**	**9**	**10**	**11**	**12**	**13**
5(2)(i) (iv)	Eradication of invasive species *Hyptis suaveolens* before flowering for improving wildlife habitat	50	0.15	7.50	FD PTR	BTR	Paoni (WL)	Nimgaon	Tr Jogikheda	391	N 20°46'11".25	E 79°34'11.45
5(2)(i) (iv)	Eradication of invasive species *Hyptis suaveolens* before flowering for improving wildlife habitat	50	0.15	7.50	FD PTR	BTR	Paoni (WL)	trip Nimgaon	Ranai Round	392	N 20°45'59"35.	E 79°32'59.67
5(2)(i) (iv)	Eradication of invasive species *Hyptis suaveolens* before flowering for improving wildlife habitat	25	0.15	3.75	FD PTR	BTR	Kuhi	Ranbodi	Tarna	1433 PF 1434 PF	N 20 53 54 2 N 20 53 59 7	E 79 25 59 9 E 79 25 53 8
5(2)(i) (iv)	Eradication of invasive species *Hyptis suaveolens* before flowering for improving wildlife habitat	75	0.15	11.25	FD PTR	BTR	Kuhi	Ranbodi	Wanoda	364	N 20 51 16 48 N 20 51 47 46	E 79 25 05 19 E 79 25 10 38
5(2)(i) (iv)	Eradication of invasive species *Hyptis suaveolens* before flowering for improving wildlife habitat	50	0.15	7.50	FD PTR	BTR	Umred (WL)	Navegaon Deshmukh	Karandala	363	N 20 50 54.10	E 079 24 44.10
5(2)(i) (iv)	Eradication of invasive species *Hyptis suaveolens* before flowering for improving wildlife habitat	30	0.15	4.50	FD PTR	BTR	Umred (WL)	Navegaon Deshmukh	Karandala	1415	N 20 51 09.77	E079 24 17.8
5(2)(i) (iv)	Eradication of invasive species *Hyptis suaveolens* before flowering for improving wildlife habitat	30	0.15	4.50	FD PTR	BTR	Umred (WL)	Navegaon Deshmukh	Karandala	1416	N20 50 21.14	E 79 24 09.50
5(2)(i) (iv)	Eradication of invasive species *Hyptis suaveolens* before flowering for improving wildlife habitat	50	0.15	7.50	FD PTR	BTR	Umred (WL)	Navegaon Deshmukh	Thana	1418	N 20 49 16.31	E 079 23 27.44
5(2)(i) (iv)	Eradication of invasive species *Hyptis suaveolens* before flowering for improving wildlife habitat	30	0.15	4.50	FD PTR	BTR	Umred (WL)	Navegaon Deshmukh	Thana	1419	N20 48 46.16	E 079 23 59.91
5(2)(i) (iv)	Eradication of invasive species *Hyptis suaveolens* before flowering for improving wildlife habitat	30	0.15	4.50	FD PTR	BTR	Umred (WL)	Navegaon Deshmukh	Thana	1417	N20 49 14.96	E 079 24 10.02
5(2)(i) (iv)	Eradication of invasive species *Hyptis suaveolens* before flowering for improving wildlife habitat	30	0.15	4.50	FD PTR	BTR	Umred (WL)	Navegaon Deshmukh	Ranbodi South	359	N20 50 56.52	E 076 26 35.16
5(2)(i) (iv)	Eradication of invasive species *Hyptis suaveolens* before flowering for improving wildlife habitat	30	0.15	4.50	FD PTR	BTR	Umred (WL)	Navegaon Deshmukh	Ranbodi South	361	N20 50 09.69	E 079 25 47.54
5(2)(i) (iv)	Eradication of invasive species *Hyptis suaveolens* before flowering for improving wildlife habitat	30	0.15	4.50	FD PTR	BTR	Umred (WL)	Navegaon Deshmukh	Ranbodi South	362	N20 51 07.97	E 079 26 30.79
		510		**76.50**								

Works proposed					Location of work						Latlong	
Rule No.	Item of work	Quantity	Rate	Amount (Rs. in Lakhs	Circle	Division	Range	Round	Beat	Compartment No	Latitude	Longitude
1	2	3	4	5	6	7	8	9	10	11	12	13
5(2)(i) (iv)	Weed removal Work	90		6.63	FD TATR	Core TATR	Tadoba	Bhanus khindi	Sagaldeo	62	N 20° 24' 29.052",	E79° 15' 30.564"
5(2)(i) (iv)	Weed removal Work	40		2.98	FD TATR	Core TATR	Tadoba	Bhanus khindi	Sagaldeo	67	N 20° 24' 6.912",	E79° 16' 19.02"
5(2)(i) (iv)	Weed removal Work	50		3.71	FD TATR	Core TATR	Tadoba	Bhanus khindi	Sagaldeo	68	N 20° 23' 53.052",	E79° 15' 43.704"
5(2)(i) (iv)	Weed removal Work	250		18.34	FD TATR	Core TATR	Tadoba	Sonegaon	Tadoba	82	N 20° 21' 32.544",	E79° 17' 24.072"
5(2)(i) (iv)	Weed removal Work	150		11.02	FD TATR	Core TATR	Tadoba	Sonegaon	Tadoba	83	N 20° 20' 50.316",	E79° 17' 6.072"
5(2)(i) (iv)	Weed removal Work	50		3.71	FD TATR	Core TATR	Tadoba	Sonegaon	Tadoba	90	N 20° 19' 58.404",	E79° 17' 17.844"
5(2)(i) (iv)	Weed removal Work	170		12.49	FD TATR	Core TATR	Kolara	Kolara	Chikhalwahi	70/80	N 20° 23' 43.728",	E79° 17' 42.072"
5(2)(i) (iv)	Weed removal Work	120		8.83	FD TATR	Core TATR	Kolara	Kolara	Navegaon	48/49/50	N 20° 24' 43.596",	E79° 17' 52.116"
5(2)(i) (iv)	Weed removal Work	20		1.51	FD TATR	Core TATR	Kolara	Jamni	Jamni	101	N20° 20' 39.228",	E79° 21' 3.528"
5(2)(i) (iv)	Weed removal Work	35		2.61	FD TATR	Core TATR	Kolara	Jamni	Pandharpaoni	92	N20° 20' 2.544",	E79° 18' 15.66"
5(2)(i) (iv)	Weed removal Work	30		2.25	FD TATR	Core TATR	Kolara	Khatoda	Chichghat	113	N20° 19' 28.632",	E79° 18' 52.668"
5(2)(i) (iv)	Weed removal Work	25		3.24	FD TATR	Core TATR	Moharli	Palasgaon	Palasgaon	25	N20° 16' 33.852",	E79° 21' 36.396"
5(2)(i) (iv)	Weed removal Work	25		1.32	FD TATR	Core TATR	Moharli	Palasgaon	Ambegad	25	N20° 15' 10.404",	E79° 19' 36.48"
5(2)(i) (iv)	Weed removal Work	10		1.58	FD TATR	Core TATR	Moharli	Moharli	Thanegaon	10	N20° 11' 43.944",	E79° 20' 9.348"
5(2)(i) (iv)	Weed removal Work	12		3.11	FD TATR	Core TATR	Moharli	Moharli	Thanegaon	12	N20° 11' 31.668",	E79° 20' 12.984"
5(2)(i) (iv)	Weed removal Work	10		0.73	FD TATR	Core TATR	Kolsa	Botezari	Kohpari	312	N20° 9' 55.872",	E79° 29' 33.18"
5(2)(i) (iv)	Weed removal Work	10		0.73	FD TATR	Core TATR	Kolsa	Zari	Sangam	338	N20° 8' 2.508",	E79° 26' 46.428"
5(2)(i) (iv)	Weed removal Work	15		1.1	FD TATR	Core TATR	Kolsa	Zari	Zari	343	N20° 6' 46.368",	E79° 29' 47.472"
5(2)(i) (iv)	Weed removal Work	10		0.75	FD TATR	Core TATR	Kolsa	Kolsa	Kolsa	315	N20° 9' 9.144",	E79° 30' 12.024"
5(2)(i) (iv)	Weed removal Work	10		0.75	FD TATR	Core TATR	Kolsa	Botezari	Botezari-I	313	N20° 11' 15.324",	E79° 28' 28.02"
5(2)(i) (iv)	Weed removal Work	20		1.46	FD TATR	Core TATR	Kolsa	Zari	Belan	335	N20° 8' 29.688",	E79° 29' 44.196"
5(2)(i) (iv)	Weed removal Work	10		0.73	FD TATR	Core TATR	Kolsa	Kolsa	Raiba	333	N20° 8' 52.728",	E79° 31' 39.792"
5(2)(i) (iv)	Weed removal Work	10		0.75	FD TATR	Core TATR	Kolsa	Kolsa	Pangadi	317	N20° 10' 36.192",	E79° 32' 29.616"

Works proposed					Location of work						Latlong	
Rule No.	**Item of work**	**Quantity**	**Rate**	**Amount (Rs. in Lakhs**	**Circle**	**Division**	**Range**	**Round**	**Beat**	**Compartment No**	**Latitude**	**Longitude**
1	**2**	**3**	**4**	**5**	**6**	**7**	**8**	**9**	**10**	**11**	**12**	**13**
5(2)(i) (iv)	Weed removal Work	15		1.10	FD TATR	Core TATR	Kolsa	Zari	Zari	345	N20° 6' 28.728",	E79° 30' 37.296"
5(2)(i) (iv)	Weed removal Work	75		5.92	FD TATR	Core TATR	Karwa	Piparheti	Pandarwani	266	N20° 15' 24.192",	E79° 32' 41.388"
5(2)(i) (iv)	Weed removal Work	35		2.79	FD TATR	Core TATR	Karwa	Piparheti	Piparheti-2	260	N20° 15' 10.332"	E79° 31' 2.388"
5(2)(i) (iv)	Weed removal Work	43		3.42	FD TATR	Core TATR	Karwa	Piparheti	Piparheti-1	282	N20° 14' 23.964",	E79° 30' 0.792"
5(2)(i) (iv)	Weed removal Work	3.40		0.50	FD TATR	Core TATR	Karwa	Karwa	Karwa-2	251	N20° 14' 34.872",	E79° 24' 33.804"
5(2)(i) (iv)	Weed removal Work	3.90		0.50	FD TATR	Core TATR	Karwa	Karwa	Karwa-2	249	N20° 15' 59.22",	E79° 24' 39.42"
5(2)(i) (iv)	Eradication of lantana/ Rhimonis/ Rantulas	200	0.072	14.40	FD TATR	Buffer TATR	Moharli	Devala	Devala	164	N 20 7 34 76	E 79 22 5 81
5(2)(i) (iv)	Eradication of lantana/ Rhimonis/ Rantulas	625	0.050	31.25	FD TATR	Buffer TATR	Khadsangi	Talodhi	Alizanja	47	N 20 26 1 47	E 79 17 32 10
5(2)(i) (iv)	Eradication of invasive species (Ipomea)	20.00	0.69 Lac/per ha	13.80	FD TATR	Sub DFO (WL) Alapalli	Choudampalli	Choudampalli	Dhannur	307	N 19 34 090	E 79 53 250
5(2)(i) (iv)	Eradication of invasive species (Ipomea)	10.00	0.69 Lac/per ha	7.00	FD TATR	Sub DFO (WL) Alapalli	Choudampalli	Choudampalli	Dhannur	306	N 19 33 591	E 79 53 455
		2202.30		**171.01**								
5(2)(i) (iv)	Eradication of invasive species	100	10.00	10.00	FD NNTR	DD NNTR	Navegaon			5 & 7	N-21,00,56.85	E-080,09,14.41
5 (2) i (iv)	**Sub Total for Eradication of invacive species**	**3162.30**		**345.01**								
5 (2) I	**Total for Improvement of wildlife habitat**			**924.29**								
5 (2) J	**Planting and rejuvenation of forest cover on non-forest land falling in wildlife corridors**	-	LS	3.00	FD NNTR	DD NNTR	Bufferr Ranges					
5(2) (k)	**Establishment, operation and maintenance of animal rescue center and veterinary treatement facilities for wild animals**											
5(2)(k) (ii)	**Veterinary Treament Facilities for Wild Animals**											
5(2)(k) (ii)	a) Maintainance of TTC (Transit Treatment Center)	LS		10.00	FD TATR	Buffer TATR	Chandrapur	Chandrapur	Chandrapur			
5(2)(k) (ii)	b) Rescue emergency operation (Rs. 1.00 lakh per range in case of conflict)	LS		6.00	FD TATR	Buffer TATR	Chandrapur					
5 (2) k (ii)	**Sub Total for Veterinary Treament Facilities for Wild Animals**			**16.00**								

Works proposed					Location of work						Latlong	
Rule No.	**Item of work**	**Quantity**	**Rate**	**Amount (Rs. in Lakhs**	**Circle**	**Division**	**Range**	**Round**	**Beat**	**Compartment No**	**Latitude**	**Longitude**
1	**2**	**3**	**4**	**5**	**6**	**7**	**8**	**9**	**10**	**11**	**12**	**13**
5(2)(k)(iii)	**Animal seizing & capturing device**											
5(2)(k)(iii)	Purchase of tranquilizing medicine (Dart medicines		LS	10.00	FD TATR	Buffer TATR	Chandrapur	Chandrapur	Chandrapur (TTC)			
5(2)(k)(iii)	Animal seizing & capturing devices		LS	3.00	FD NNTR	DD NNTR						
5 (2) k (iii)	**Sub Total for Animal seizing & capturing device**			**13.00**								
5(2)(k)(iv)	**Rescue Emergency Operations**											
5(2)(k)(iv)	Purchase of Material and Medicine for RRU Paoni and Nagalwadi	LS	5.00	5.00	FD PTR	PTR	Nagalwadi					
5 (2) k (iv)	**Sub Total for Rescue Emergency Operations**			**5.00**								
5(2)(k)(v)	**Strengthening of Rapid Rescue Team**											
5(2)(k)(v)	Strengthing of rapid rescue team	2	10.00	20.00	FD PTR	PTR						
5(2)(k)(v)	Strengthing of rapid rescue team for carrying out Rescues of Wild animals that fall in the canal of Gosekhurd Dam	1	LS	5.00	PTR	BTR	Pauni					
5(2)(k)(v)	Training of RRU	LS	LS	3.00	FD TATR	Buffer	Chandrapur	Chandrapur	Chandrapur	..	..	
5 (2) k (v)	**Sub Total for Strengthening of Rapid Rescue Team**			**28.00**								
5 (2) k	**Total for Establishment, operation and maintenance of animal rescue center and veterinary treatement facilities for wild animals**			**62.00**								
5 (2) (L)	**Supply of wood-saving cooking appliances and other forest produce saving device in forest fringe villages as specified by the National Anuthories from time to time**											
5 (2) (L)	Gas Reffiling For EDC & Jan-van Village	6250	0.01	50.00	PTR	BTR	Kuhi					
5 (2) L	**Total for Supply of wood-saving cooking appliances and other**	**6250.00**		**50.00**								
	Total for Wildlife Management & Man-animal conflict mitigation			**1039.29**								
**	**Grand Total for Activities under not less than 80% component**			**1680.78**								

Works proposed					Location of work						Latlong	
Rule No.	**Item of work**	**Quantity**	**Rate**	**Amount (Rs. in Lakhs**	**Circle**	**Division**	**Range**	**Round**	**Beat**	**Compartment No**	**Latitude**	**Longitude**
1	**2**	**3**	**4**	**5**	**6**	**7**	**8**	**9**	**10**	**11**	**12**	**13**
5 (3)	**Works under not more than 20% component (Rule 5(3))**											
5(3) (d)	**Construction upgradation and maintenance of inspection paths, forest roads in forest area fire lines, watch towers, check post and timber depots**											
5(3) (d)	Tourist Gate to Khapari Road 8Km.	8.00		1.60	FD PTR	BTR	Pauni	Pauni	Pauni	306	N-20°47’53.53	E-79°37’0.80
5(3) (d)	Zenda Pahadi Road 3 Km.	3.00		0.60	FD PTR	BTR	Pauni	Pauni	Pauni	306	N-20°47’53.53	E-79°37’0.80
5(3) (d)	Hira tippat to Mohurli tippat 2.50 Km.	2.50		0.50	FD PTR	BTR	Pauni	Pauni	Pauni	306	N-20°47’53.53,	E-79°37’0.80
5(3) (d)	Khapari road to ghatumari road 3 Km.	3.00		0.60	FD PTR	BTR	Pauni	Pauni	Gaidongari	1482/1,2	N-20°50’55.50	E-79°34’13.92
5(3) (d)	Bori to Khapari Road 2 Km.	2.00		0.50	FD PTR	BTR	Pauni	Pauni	Gaidongari	1482/1,2	N-20°50’55.50	E-79°34’13.92
5(3) (d)	Pillar No. 33 to Ghatumari Road 1.50 Km.	1.50		0.30	FD PTR	BTR	Pauni	Pauni	Gaidongari	218	N-20°50’55.50	E-79°34’13.92
5(3) (d)	Khapari Tippat to Parsodi road 2 Km.	2.00		0.40	FD PTR	BTR	Pauni	Pauni	Gaidongari	1482/2,& 218	N-20°50’55.50	E-79°34’13.92
5(3) (d)	Khapari Road to Mahalgaon Road 1.50	1.50		0.30	FD PTR	BTR	Pauni	Pauni	Mahalgaon	390 B	N-20°49’37.2	E-79°33’57.3
5(3) (d)	Tukum gate to Khapari Talav 0.5 Km.	0.50		0.10	FD PTR	BTR	Pauni	Pauni	Mahalgaon	305	N-20°49’2.7	E-79°34’10.5
5(3) (d)	Mohurli to Zenda Pahadi tippat 3 Km.	3.00		0.60	FD PTR	BTR	Pauni	Pauni	Mahalgaon	305	N-20°49’2.7	E-79°34’10.5
5(3) (d)	Chichkeda to Gaidongari road 1.3 Km.	1.30		0.26	FD PTR	BTR	Pauni	Nimgaon	Chichgaon	224	N-20°48’07.83	E-79°34’43.38
5(3) (d)	Chichkheda Punarvasan Barriare 1.50 Km	1.50		0.30	FD PTR	BTR	Pauni	Nimgaon	Chichgaon	226	N-20°47’45.71	E-79°35’11.36
5(3) (d)	Nimgaon to Chichkheda Road 4 km.	4.00		0.80	FD PTR	BTR	Pauni	Nimgaon	Jogikheda	229	N-20°47’15.9	E-79°35’26.50
5(3) (d)	Nimgaon Pro. Hut to Vahai Talav 3 km.	3.00		0.60	FD PTR	BTR	Pauni	Nimgaon	Jogikheda	229 & 390	N-20°47’15.9,	E-79°35’26.50
5(3) (d)	Ranai to Pahungaoh road 2 km.	2.00		0.40	FD PTR	BTR	Pauni	Nimgaon	Ranai	392 & 228	N-20°46’10.5	E-79°32’9.70
5(3) (d)	Bhoge Barriare to Ranai Talav 3 Km.	3.00		0.60	FD PTR	BTR	Pauni	Nimgaon	Ranai	391 & 230	N-20°46’10.5	E-79°32’9.70

Works proposed					Location of work						Latlong	
Rule No.	Item of work	Quantity	Rate	Amount (Rs. in Lakhs	Circle	Division	Range	Round	Beat	Compartment No	Latitude	Longitude
1	2	3	4	5	6	7	8	9	10	11	12	13
5(3) (d)	Upgradation and regular maintenance of Tourist Road in PTR Ranbodi Tippat To Pandharagota	5.0		0.90	FD PTR	BTR	Umred (WL)	Navegaon Deshmukh	Ranbodi South	362	N 20 51 12.3	E 079 26 14.7
5(3) (d)	Upgradation and regular maintenance of Tourist Road in PTR Pandharagota To Navegaon De Gate	5.0		0.90	FD PTR	BTR	Umred (WL)	Somnala,	Ranmangali	1440	N 20 48 16.36	E 079 25 21.31
5(3) (d)	Upgradation and regular maintenance of Tourist Road in PTR Shakil Tippat To Thana Kuti	1.5		0.27	FD PTR	BTR	Umred (WL)	Navegaon Deshmukh	Navegaon Deshmukh	362	N 20 49 10.09	E 079 25 49.2
5(3) (d)	Upgradation and regular maintenance of Tourist Road in PTR Thana Kuti To Thana Talav	5.0		0.90	FD PTR	BTR	Umred (WL)	Navegaon Deshmukh	Thana	1419	N 20 49 29.02	E 79 25 3.83
5(3) (d)	Upgradation and regular maintenance of Tourist Road in PTR Bhalerao Tippat To Swami Tippat	4.4		0.80	FD PTR	BTR	Umred (WL)	Somnala	Pullar	358	N 20 50 56.83	E 079 27 14.37
5(3) (d)	Upgradation and regular maintenance of Tourist Road in PTR Swami Tippat To Pullar Gate To Jagankopi Marg,Jagankopi Road	5.0		0.90	FD PTR	BTR	Umred (WL)	Somnala	Pullar	763	N 20 51 01.75	E 079 28 33.53
5(3) (d)	Upgradation and regular maintenance of Tourist Road in PTR Swami Tippat To Satbhoki Marg Kitali Kuti	2.8		0.55	FD PTR	BTR	Umred (WL)	Somnala	Pullar	357	N 20 51 1.55	E 079 28 33.59
5(3) (d)	Upgradation and regular maintenance of Tourist Road in PTR Kitali Kuti To Kitali Mndir	2.4		0.43	FD PTR	BTR	Umred (WL)	Somnala	Kitali	1450	N 20 49 48.53	E 079 28 33.59
5(3) (d)	Upgradation and regular maintenance of Tourist Road in PTR Kitali Mandir To Bapurao Tippat	4.8		0.87	FD PTR	BTR	Umred (WL)	Somnala	Kitali	1450	N 20 49 19.52	E 079 29 3.45
5(3) (d)	Upgradation and regular maintenance of Tourist Road in PTR Kitali Kuti To Bapurao Tippat	2.0		0.36	FD PTR	BTR	Umred (WL)	Somnala	Kitali	1450	N 20 49 48.53	E 079 29 3.45
5(3) (d)	Upgradation and regular maintenance of Tourist Road in PTR Bapurao Tippat To Aswalkhora	2.3		0.41	FD PTR	BTR	Umred (WL)	Somnala	Ranmangali	1440	N 20 49 41.54	E 079 28 4.57
5(3) (d)	Upgradation and regular maintenance of pettroling roads Bhagwan Tippat To Maharaj Tippat	2.5		0.45	FD PTR	BTR	Umred (WL)	Somnala	Ranmangali	1441	N 20 48 45.00	E 079 25 42.77
5(3) (d)	Upgradation and regular maintenance of pettroling roads Thana Kuti To Karandala Kuti (Canel Gate)	5.0		0.90	FD PTR	BTR	Umred (WL)	Navegaon Deshmukh	Thana	1419	N 20 49 29.02	E 079 25 3.83
5(3) (d)	Upgradation and regular maintenance of pettroling roads Haloocha Nala To Kolasabhatti	4.0		0.72	FD PTR	BTR	Umred (WL)	Navegaon Deshmukh	Karandala	1416	N 20 51 00.4	E 079 27 34.0
5(3) (d)	Upgradation and regular maintenance of pettroling roads Thana Kuti Barrier To Manora Kuti Marg Manora gate Barrier	5.0		0.90	FD PTR	BTR	Umred (WL)	Navegaon Deshmukh	Thana	1419	N 20 49 29.1	E 079 25 04.0
5(3) (d)	Upgradation and regular maintenance of pettroling roads Kolasabhatti To Karandala Talav	4.0		0.72	FD PTR	BTR	Umred (WL)	Navegaon Deshmukh	Karandala	363	N 20 51 08.0	E 079 26 21.1

Works proposed					Location of work						Latlong	
Rule No.	Item of work	Quantity	Rate	Amount (Rs. in Lakhs	Circle	Division	Range	Round	Beat	Compartment No	Latitude	Longitude
1	2	3	4	5	6	7	8	9	10	11	12	13
5(3) (d)	Upgradation and regular maintenance of pettroling roads Vantalav Aproch road	0.5		0.09	FD PTR	BTR	Umred (WL)	Navegaon Deshmukh	Ranbodi South	359	N 20 50 30.48	E 079 26 21.1
5(3) (d)	Upgradation and regular maintenance of pettroling roads Ranbodi Tippat Barrier To Pandharagota Barrier	3.0		0.54	FD PTR	BTR	Umred (WL)	Navegaon Deshmukh	Ranbodi South	359	N 20 51 12.1	E 079 26 14.7
5(3) (d)	Upgradation and regular maintenance of pettroling roads Munna Tippat To Pandharagota	1.4		0.26	FD PTR	BTR	Umred (WL)	Navegaon Deshmukh	Ranbodi South	359	N 20 50 36.15	E 079 26 26.00
5(3) (d)	Upgradation and regular maintenance of pettroling roads Munna Tippat To Surya Tippat To pandharagota Barrier	2.3		0.42	FD PTR	BTR	Umred (WL)	Navegaon Deshmukh	Ranbodi South	359	N 20 50 36.15	E 079 26 26.00
5(3) (d)	Upgradation and regular maintenance of pettroling roads Pullar road to gaypani	0.6		0.11	FD PTR	BTR	Umred (WL)	Somnala	Pullar	757	N 20 51 01.75	E 079 28 33.53
5(3) (d)	Upgradation and regular maintenance of pettroling roads Pullar road to jagankopi to khodtale marg thana rasta	1.5		0.27	FD PTR	BTR	Umred (WL)	somnala	Pullar	757	N 20 50 52.00	E 079 29 42.00
5(3) (d)	Upgradation and regular maintenance of pettroling roads thana rasta to kolhe farm	0.9		0.16	FD PTR	BTR	Umred (WL)	Somnala	Pullar	757	N 20 52 00.66	E 079 30 19.71
5(3) (d)	Upgradation and regular maintenance of pettroling roads Ranmangali barrier to pandhragota road	2.7		0.49	FD PTR	BTR	Umred (WL)	Somnala	Ranmangali	1440	N 20 49 34.05	E 079 26 36.01
5(3) (d)	Upgradation and regular maintenance of pettroling roads ranmangali barrier to bapurao tippat road	2.9		0.52	FD PTR	BTR	Umred (WL)	somnala	Ranmagali	1440	N 20 49 41.04	E 079 28 04.06
5(3) (d)	Upgradation and regular maintenance of pettroling roads Waghai kuti to waghai tippat road	1.1		0.20	FD PTR	BTR	Umred (WL)	Somnala	Ranmagali	1440	N 20 48 39.08	E 079 27 37.06
5(3) (d)	Upgradation and regular maintenance of pettroling roads Waghai chawpat to gawatkuran tas khodtale	2.5		0.45	FD PTR	BTR	Umred (WL)	Somnala	Ranmagali	1440	N 20 49 17.03	E 079 27 44.06
5(3) (d)	Upgradation and regular maintenance of pettroling roads Barjabai tippat to bapurao tippat	1.5		0.27	FD PTR	BTR	Umred (WL)	Somnala	Ranmagali	1441	N 20 48 59.08	E 079 28 08.08
5(3) (d)	Upgradation and regular maintenance of pettroling roads Tas canel to upasha tippat	1.0		0.18	FD PTR	BTR	Umred (WL)	Somnala	Tas	1452	N 20 48 10.62	E 079 28 56.66
5(3) (d)	Upgradation and regular maintenance of pettroling roads Ravi tippat to tas khodtale c.n.1452	0.5		0.09	FD PTR	BTR	Umred (WL)	Somnala	Tas	1452	N 20 48 38.35	E 079 28 59.24
5(3) (d)	Upgradation and regular maintenance of pettroling roads Tas canel to Mashadongari	1.1		0.20	FD PTR	BTR	Umred (WL)	Somnala	Tas	1452	N 20 48 05.45	E 079 28 56.20
5(3) (d)	Upgradation and regular maintenance of pettroling roads Bhasker tippat to kolari rasta	1.0		0.18	FD PTR	BTR	Umred (WL)	Somnala	Tas	1452	N 20 49 10.26	E 079 29 15.54
5(3) (d)	Upgradation and regular maintenance of pettroling roads Satbhoki to aswalkhora road	2.9		0.53	FD PTR	BTR	Umred (WL)	Somnala	Kitali	1450	N 20 49 48.53	E 079 29 3.45
5(3) (d)	Upgradation and regular maintenance of pettroling roads C.N.1442 Outer	4.0		0.72	FD PTR	BTR	Umred (WL)	Navegaon Deshmukh	Navegaon Deshmukh	1442	N 20 48 36.10	E 079 25 33.61
5(3) (d)	Upgradation and regular maintenance of pettroling roads Navegaon D to Manora Kuti	3.0		0.54	FD PTR	BTR	Umred (WL)	Navegaon Deshmukh	Navegaon Deshmukh	1439	N 20 48 22.02	E 079 25 20.62

Works proposed					Location of work						Latlong	
Rule No.	Item of work	Quantity	Rate	Amount (Rs. in Lakhs	Circle	Division	Range	Round	Beat	Compartment No	Latitude	Longitude
1	2	3	4	5	6	7	8	9	10	11	12	13
5(3) (d)	Upgradation and regular maintenance of pettroling roads Manora kuti to manora talav marge thana talav	6.0		1.08	FD PTR	BTR	Umred (WL)	Navegaon Deshmukh	Thana	1419	N 20 48 20.02	E 079 24 43.73
5(3) (d)	Upgradation and regular maintenance of pettroling roads Thana talav to karandala get	3.0		0.54	FD PTR	BTR	Umred (WL)	Navegaon Deshmukh	Thana	1418	N 20 48 52.03	E 079 23 00.26
5(3) (d)	Upgradation and regular maintenance of pettroling roads Pullar gate to bhowari barrier	3.9		0.70	FD PTR	BTR	Umred (WL)	Somnala	Pullar	757	N 20 51 13.05	E 079 29 46.94
5(3) (d)	Upgradation and regular maintenance of pettroling roads Pullar get To thana rasta	3.0		0.54	FD PTR	BTR	Umred (WL)	Somnala	Pullar	757	N 20 52 00.66	E 079 30 19.71
5(3) (d)	Upgradation and regular maintenance of pettroling roads Ranmangali barrier to tas c.n line	2.3		0.41	FD PTR	BTR	Umred (WL)	Somnala	Ranmangali	1441	N 20 48 22.81	E 079 27 16.08
5(3) (d)	Upgradation and regular maintenance of pettroling roads Tas canel to ranmagali c.n line	1.3		0.23	FD PTR	BTR	Umred (WL)	Somnala	Tas	1452	N 20 48 10.62	E 079 28 56.66
5(3) (d)	Upgradation and regular maintenance of pettroling roads Pimpalgaon point to bhasker tippat	2.0		0.36	FD PTR	BTR	Umred (WL)	Somnala	Tas	1468	N 20 48 00.79	E 079 30 06.05
5(3) (d)	Upgradation and regular maintenance of pettroling roads Bhasker tippat to bhowari rasta	4.3		0.75	FD PTR	BTR	Umred (WL)	Somnala	Tas	1451	N 20 49 10.26	E 079 29 15.54
5(3) (d)	Tourist Gate To Gawati Talav Road Repairing	6.6		1.32	FD PTR	BTR	Kuhi	Velgaon	Velgaon N	1457 1458	N-20,54,21.63	E-79,30,07.72
5(3) (d)	Wakadi Tippat To Gillorkar Bhatti Road Repairing	2.5		0.50	FD PTR	BTR	Kuhi	Velgaon	Velgaon N	1457	N-20,54,21.63	E-79,30,07.72
5(3) (d)	Gawati Talav To Marupar Barrier Road Repairing	3		0.60	FD PTR	BTR	Kuhi	Velgaon	Marupar	1463 1475	N-20,53,19.93	E-79,32,28.37
5(3) (d)	Chandala Tippat To Talav No 1 Road Reparing	1.4		0.28	FD PTR	BTR	Kuhi	Velgaon	Marupar	1462 1463	N-20,53,19.93	E-79,32,28.37
5(3) (d)	Marupar Kuti To Rohini Khodtalav Road Repairig	2.5		0.50	FD PTR	BTR	Kuhi	Velgaon	Chandala	1461	N-20,53.25.35	E-79,29.39.39
5(3) (d)	Gondoba Barrier To Shivarya Tippat Road Repairing	4.8		0.96	FD PTR	BTR	Kuhi	Velgaon	Chandala	1461	N-20,53.25.35	E-79,29.39.39
5(3) (d)	Thana Kuti To Gillorkar Vitbhatti road Repairing	4		0.80	FD PTR	BTR	Kuhi	Velgaon	Velgaon S	1447 1459 1460	N-20,53,48.35	E-79,30,45.47
5(3) (d)	Rohini Khodtalav To Chaube Tippat Road Repairing	1		0.20	FD PTR	BTR	Kuhi	Velgaon	Velgaon S	1460	N-20,53,48.35	E-79,30,45.47
5(3) (d)	Sarpanch Tippat To Nursary Road Repairing	1.8		0.36	FD PTR	BTR	Kuhi	Velgaon	Velgaon N	1458	N-20,54,21.63	E-79,30,07.72

Works proposed					Location of work						Latlong	
Rule No.	Item of work	Quantity	Rate	Amount (Rs. in Lakhs	Circle	Division	Range	Round	Beat	Compartment No	Latitude	Longitude
1	2	3	4	5	6	7	8	9	10	11	12	13
5(3) (d)	Dahegaon Kuti To Wakadi Talav	2		0.40	FD PTR	BTR	Kuhi	Velgaon	Velgaon N	1457	N-20,54,21.63	E-79,30,07.72
5(3) (d)	Marupar Kuti Kitadi Ring Road Repairing	5		1.00	FD PTR	BTR	Kuhi	Velgaon	Chandala	758, 1461	N-20,53.25.35	E-79,29.39.39
5(3) (d)	Chaube Barrier To Khondya Road Repairing	1.5		0.30	FD PTR	BTR	Kuhi	Velgaon	Velgaon S	1460	N-20,53,48.35	E-79,30,45.47
5(3) (d)	Thana Kuti To Beat Boundary	0.9		0.18	FD PTR	BTR	Kuhi	Velgaon	Velgaon S	1460, 1447	N-20,53,48.35	E-79,30,45.47
5(3) (d)	Velagon S Beat Boundry To Dhamana Checkpost Road Repairig	1.5		0.30	FD PTR	BTR	Kuhi	Velgaon	Dhamana	1437	N-20,53,08.3	E-79,28,03.0
5(3) (d)	Modicha Doh To Gaypani Road Repairig	2.2		0.44	FD PTR	BTR	Kuhi	Velgaon	Dhamana	1438, 1448	N-20,53,08.7	E-79,28,03.2
5(3) (d)	Gaypani Chaupat To Khondya Road Repairig	4.1		0.82	FD PTR	BTR	Kuhi	Velgaon	Dhamana	1449	N-20,53,08.3	E-79,28,03.0
5(3) (d)	Tola Tippat To Shantaram Tippat Road Repairig	1.6		0.32	FD PTR	BTR	Kuhi	Velgaon	Dhamana	1437, 1438	N-20,53,08.7	E-79,28,03.2
5(3) (d)	Ranbodi Gaon To Chaudhary Tippat Road Repairig	1		0.20	FD PTR	BTR	Kuhi	Ranbodi	Ranbodi N	1436	N-20,52,27.57	E-79,26,52.91
5(3) (d)	Shantaram Tippat To Chaudhary Tippat Road Repairig	1.4		0.28	FD PTR	BTR	Kuhi	Ranbodi	Ranbodi N	1436	N-20,52,27.57	E-79,26,52.91
5(3) (d)	Yende Tippat To Member Tippat Road Repairig	2.8		0.56	FD PTR	BTR	Kuhi	Ranbodi	Ranbodi N	1436	N-20,52,27.57	E-79,26,52.91
5(3) (d)	Shantaram Tippat To Member Tippat Road Repairig	3.5		0.70	FD PTR	BTR	Kuhi	Ranbodi	Ranbodi N	1436	N-20,52,27.57	E-79,26,52.91
5(3) (d)	Ranbodi Gawat Kuran Rasta Road Repairig	5		1.00	FD PTR	BTR	Kuhi	Ranbodi	Ranbodi N	Aqcuired Land	N-20,52,50.03	N-20,52,50.03
5(3) (d)	Bhoyar Kuti To Ranbodi Gaon Road Repairig	1		0.30	FD PTR	BTR	Kuhi	Ranbodi	Ranbodi N	Aqcuired Land	N-20,52,96.0	N-20,52,96.0
5(3) (d)	Deni Tok To Saighat Kuti Road Repairig	3		0.60	FD PTR	BTR	Kuhi	Ranbodi	Wanoda	1410	N-20,53,6.00	E-79,23.29.00
5(3) (d)	Satitippat To Gondincha Akhar Road Repairig	3		0.60	FD PTR	BTR	Kuhi	Ranbodi	Wanoda	364, 365	N-20,53,34.2	E-79,24,29.9
5(3) (d)	Wanoda Kuti Dhamana Tippat Road Repairig	2.5		0.50	FD PTR	BTR	Kuhi	Ranbodi	Wanoda	364, 365	N-20,53,34.2	E-79,24,29.9

Works proposed					Location of work						Latlong	
Rule No.	Item of work	Quantity	Rate	Amount (Rs. in Lakhs	Circle	Division	Range	Round	Beat	Compartment No	Latitude	Longitude
1	2	3	4	5	6	7	8	9	10	11	12	13
5(3) (d)	Wanoda Kuti To Satighat Kuti Road Repairig	4		0.80	FD PTR	BTR	Kuhi	Ranbodi	Wanoda	1410, 365	N-20,53,34.2	E-79,23,29.2
5(3) (d)	Wanoda Kuti To Ranbodi Road Repairig	2		0.40	FD PTR	BTR	Kuhi	Ranbodi	Wanoda	364	N-20,52,42.06	E-79,25,19.8
5(3) (d)	Satighat Kuti To Satitippat Road Repairig	1.5		0.30	FD PTR	BTR	Kuhi	Ranbodi	Tarna	1410, 1434	N-20,54,04.7	E-79,25,58.4
5(3) (d)	Satitippat To Member Tippat Road Repairig	2.3		0.46	FD PTR	BTR	Kuhi	Ranbodi	Tarna	1434	N-20,54,04.7	E-79,25,58.4
5(3) (d)	Member Gate To Dhamana Tapasani Naka Road Repairig	3.6		0.75	FD PTR	BTR	Kuhi	Ranbodi	Chikana	1437	N-20,52,36.8	E-79,26,12.9
		245.70		**47.00**								
5(3) (d)	Dongargaon Boundry to Tumdhimendha Beat Boundry	5	1.35	1.35	FD NNTR	DD NNTR	Navegaon	Kosabi	Nishani	700 ,703	N- 21.00.23.76	E- 080.14.01.65
5(3) (d)	Khadki to Chutiya Protection Road	5	1.35	1.35	FD NNTR	DD NNTR	Navegaon	Kosabi	Tumdhimendha	704 , 705 , 707	N- 21.00.07.19	E- 080.13.49.47
5(3) (d)	Agezari to Dhas Borwell Protection Road	2	0.54	0.6	FD NNTR	DD NNTR	Navegaon	Kosabi	Tumdhimendha	704 , 705 , 707	N- 20.58.38.20	E- 080.13.55.71
5(3) (d)	Range Boundry to Kalimati Protection Road	6	1.62	1.65	FD NNTR	DD NNTR	Navegaon	Kosabi	kalimati	3,4,5	N- 21.01.56.02	E-080.15.36.39
5(3) (d)	Ghatmara to Kawlewada Protection Road	2	0.54	0.6	FD NNTR	DD NNTR	Navegaon	Kokana	Khoba-1	5	N- 20.59.11	E- 080.7.35
5(3) (d)	Baki Gate to Kalimati Tourist Road	6	1.62	1.65	FD NNTR	DD NNTR	Navegaon	Kosabi	Baki-1	202	N- 21.02.29.36	E-080.10.10.28
5(3) (d)	Baki -1 to Lahan Morcha Tourist Road	3	0.81	0.85	FD NNTR	DD NNTR	Navegaon	Kosabi	kalimati	7	N- 20.33.20	E- 080.57.37
5(3) (d)	Dhawlighat to Lalbhadak Borwell Tourist Road	3	0.81	0.85	FD NNTR	DD NNTR	Navegaon	Kokana	Khoba-1	214	N- 20.57.50	E- 080.8.5
5(3) (d)	Chopan Fata to Chopan Borwell Tourist Road	1.5	0.4	0.50	FD NNTR	DD NNTR	Navegaon	Kokana	Khoba-1	215	N- 20.58.49	E- 080.9.1
5(3) (d)	Lahan Morch to Katethuva Tourist Road	5	1.35	1.35	FD NNTR	DD NNTR	Navegaon	Kokana	kawlewada	8	N- 21.00.50.28	E-080.16.26.20
5(3) (d)	Range Boundry to Koba-2 Outer Boundry Tourist Road	12	3.24	3.25	FD NNTR	DD NNTR	Navegaon	kokana	Khoba-2	220, 718	N 20, 55.40	E 80.09.31
		50.5		**14.00**								

Works proposed					Location of work						Latlong	
Rule No.	Item of work	Quantity	Rate	Amount (Rs. in Lakhs	Circle	Division	Range	Round	Beat	Compartment No	Latitude	Longitude
1	2	3	4	5	6	7	8	9	10	11	12	13
5 (2) d (vi)	Construction of Flush Causeway	1	3.00	3.00	FD PTR	PTR	west pench	Ghatpendhari	E.Ghatpendhari	676	N21°38'15.13"	E079°10'37.81"
		1	3.00	3.00	FD PTR	PTR	west pench	Ghatpendhari	W.Ghatpendhari	678	N21°38'38.35"	E079°10'55.49"
		1	3.00	3.00	FD PTR	PTR	west pench	Kolitmara	Surera	666	N21°37'34.28"	E079°10'56.29"
		1	3.00	3.00	FD PTR	PTR	west pench	Kolitmara	Surera	667	N21°37'06.41"	E079°12'33.71"
		1	3.00	3.00	FD PTR	PTR	west pench	Narhar	East Narhar	687	N21°36'30.18"	E079°11'15.82"
		1	3.00	3.00	FD PTR	PTR	Saleghat	Saleghat	Pathar	643	N21°30'11.32"	E079°03'23.06"
		1	3.00	3.00	FD PTR	PTR	Saleghat	Saleghat	S. Saleghat	642	N21°30'23.30"	E079°02'40.08"
		1	3.00	3.00	FD PTR	PTR	Saleghat	Saleghat	Ambazari	624	N21°30'47.69"	E079°05'28.21"
		1	3.00	3.00	FD PTR	PTR	Saleghat	Saleghat	Ambazari	645	N21°31'40.21"	E079°04'34.90"
		1	3.00	3.00	FD PTR	PTR	Saleghat	Dhavlapur	Dhavlapur	659	N21°32'22.94"	E079°05'07.48"
		1	3.00	3.00	FD PTR	PTR	Nagalwadi	Surewani	Surewani	652	N21°33’35.73	E79°00’31.38”
		1	3.00	3.00	FD PTR	PTR	Nagalwadi	Surewani	East Saleghat	655	N 21°32’26.65	E79°02’11.02
		1	3.00	3.00	FD PTR	PTR	Nagalwadi	Surewani	South Surewani	650	N21°32’17.08	E79°59’55.61
		1	3.00	3.00	FD PTR	PTR	Nagalwadi	Ambazari	Banera	727	N21°13’14.80	E79°08’35.90
		1	3.00	3.00	FD PTR	PTR	Nagalwadi	Ambazari	Mahkepar	234	N21°32’25.94”	E79°10’02.56’’
		1	3.00	3.00	FD PTR	PTR	Nagalwadi	Ambazari	Siladevi	620	N21°30’23.16’’	E79°09’09.92’’
		1	3.00	3.00	FD PTR	PTR	Nagalwadi	Suvardhara	Hattikheda	628	N21°28’40.49’’	E79°04’43.15’’
		1	3.00	3.00	FD PTR	PTR	Nagalwadi	Suvardhara	Mohgaon	634	N21°28’08’20	E79°01’39.28
		1	3.00	3.00	FD PTR	PTR	Nagalwadi	Suvardhara	Mohgaon	634	N21°28.57.83	E79°01’29.61’’
		1	3.00	3.00	FD PTR	PTR	Nagalwadi	Suvardhara	Mohgaon	635	N21°28.57.83	E79°01’29.61’’
		20		**60.00**								

Works proposed					Location of work						Latlong	
Rule No.	**Item of work**	**Quantity**	**Rate**	**Amount (Rs. in Lakhs**	**Circle**	**Division**	**Range**	**Round**	**Beat**	**Compartment No**	**Latitude**	**Longitude**
1	**2**	**3**	**4**	**5**	**6**	**7**	**8**	**9**	**10**	**11**	**12**	**13**
5(3) (d)	Construction of Flush Causeway on Pawanraja Tippat road at chainage 0.70 in ct.303	1	3.00	3.00	FD PTR	BTR	Pauni	Pauni	kormbhi	303	N-20°48’56.15	E-79°59’59.62
5(3) (d)	Construction of Flush Causeway	1	2.50	2.50	FD PTR	BTR	Pauni	Pauni	Gaidongari	218	N-20°50’19.00	E-79°34’43.0
5(3) (d)	Construction of Flush Causeway	1	2.50	2.50	FD PTR	BTR	Pauni	Pauni	Pauni	306	N-20°47’53.53	E-79°37’0.80
5(3) (d)	Construction of Flush Causeway	1	2.50	2.50	FD PTR	BTR	Pauni	Pauni	Mahalgaon	305	N 20°49’02.05	20°49’02.05
5(3) (d)	Construction of Fulsh Causeway	1	2.50	2.50	FD PTR	BTR	Pauni	Pauni	Pauni	306	N-20°48’16.60	E-79°36’47.76
5(3) (d)	Construction of causeway (Rapta)	2	3.00	6.00	FD PTR	BTR	Kuhi	Velgaon	Velgaon N	1458	N-20,52,51.20 ,	E-79,29,28.00
5(3) (d)	Construction of causeway (Rapta)	2	3.00	6.00	FD PTR	BTR	Kuhi	Velgaon	Dhamana	1438	N-20,52,64.00,	E-79,27,85.00
5(3) (d)	Construction of causeway (Rapta)	2	3.00	6.00	FD PTR	BTR	Kuhi	Velgaon	Marupar	1463	N-20,53,07.17	E-79,31,30.27
5(3) (d)	Construction of causeway (Rapta)	2	3.00	6.00	FD PTR	BTR	Kuhi	Ranbodi	Ranbodi N	1436, 1435	N-20,52,03.62	E-79,26,05.27
5(3) (d)	Construction of causeway (Rapta)	1	3.00	3.00	FD PTR	BTR	Kuhi	Ranbodi	Wanoda	1364	N-20,52,19.00	E-79,25,05.9
		14		**40.00**								
5 (3) (d)	**Total for Construction upgradation and maintenance of inspection paths, forest roads in forest area fire lines, watch towers, check post and timber depots**	**330.20**		**161.00**								
5(3) (e)	**Construction of residential and office building in forest for front line staffs deployed for protection of forest and wild life**											
5(3) (e) i	Construction of Type I Quarters	1	22.00	22.00	FD PTR	PTR	Chorbahuli	Chorbahuli	Chorbahuli	591	. N 21°27’48.4”	E 79°187’06.85”
		1	22.00	22.00	FD PTR	PTR	Nagalwadi	Surewani	Surewani Soth	649	N21°54'22.20"	E 79°21'20.24"
		1	22.00	22.00	FD PTR	BTR	Bordharan	Bordharan	Bordharan	Bordharan	N 20'57'23.11"	E 078'42'28.96"
		1	22.00	22.00	FD PTR	BOR (W/L)	Umred (WL)	Somnala	Bhiwapur	Serve No.735	N 20 46 11.65	E 079 30 33.55
		1	22.00	22.00	FD TATR	Core TATR	Karwa	Rantalodhi	Rantalodhi-1	PF	N 20° 13'39.58"	E 20° 13'39.58"
		1	22.00	22.00	FD NNTR	DD NNTR	Koka	Chandrapur	Chandrapur (Colony)	-	N21°09’11.99”	E079°47’56.92”
		1	22.00	22.00	FD NNTR	DD NNTR	Koka	Sonegaon	Sonegaon (Forest	-	N-21°11’36.9”	E-079° 51’12.9”
		7.00		**154.00**								

Works proposed					Location of work						Latlong	
Rule No.	**Item of work**	**Quantity**	**Rate**	**Amount (Rs. in Lakhs**	**Circle**	**Division**	**Range**	**Round**	**Beat**	**Compartment No**	**Latitude**	**Longitude**
1	**2**	**3**	**4**	**5**	**6**	**7**	**8**	**9**	**10**	**11**	**12**	**13**
5(3) (e) ii	**Construction of Type-1 (G+2) 4 Units Residental Building for Special Tiger Protection Force (STPF)**	1	180.40	180.40	FD PTR	PTR	Chorbahuli	Chorbahuli	Chorbahuli	591	N 21°27'52.94	E 79°18'40.30"
		1	180.30	180.30	FD PTR	BTR	Umred (WL)	Somnala	Bhiwapur	Serve No.735	N 20 46 11.65	E 079 30 33.55
		1	180.30	180.30	Nagpur	NNTR Gondia	Koka	Dodamazari	Dodamazari (Village)	-	N21°08’39.84”	E079°44’11.22”
		3.00		**541.00**								
5(3) (e) ii	**Construction of Type II Quarters**	1	26.00	26.00	FD PTR	PTR	Chorbahuli	Chorbahuli	Chorbahuli	591	N 21°27'52.94	E 79°18'40.30"
		1	26.00	26.00	FD PTR	BTR	Umred (WL)	Somnala	Bhiwapur	Serve No.735	N 20 46 11.65	E 079 30 33.55
		1	26.00	26.00	Nagpur	NNTR Gondia	Koka	Dodamazari	Dodamazari (Village)	-	N21°08’39.84”	E079°44’11.22”
		3.00		**78.00**								
iii	**Construction of Type III Quarters**	1	36.00	36.00	FD PTR	PTR	Saleghat	Saleghat	Saleghat	Saleghat Village	N21°52'40.21	E79°05'0.76
		1	36.00	36.00	FD PTR	BTR	Kuhi	Wag	Wag	Range Ofiice Area	N-20,94,3.90	E-79,44,55.60
		2.00		**72.00**								
v	**Construction of Range Office**	1	45.00	45.00	FD PTR	PTR Nagpur	West Pench Ghatpendhari	Ghatpendhari	Ghatpendhari	234	N 21°33’03.37”	E 79°10’13.61”
vi	**Amenities for Woman Front line staff**	1	14.00	14.00	FD PTR	BTR	Kuhi	Wag	Wag	Range Ofiice Area	N-20,94,4.10	E-79,44,56.10
	Total for 5(3) (e)	**17.00**		**904.00**								
5 (3) i)	Publicity-cum-awareness programme and exhibition on the various schemes being implemented by the State Authority from State Fund (including Nature Awareness Program conduct by METDB)		**LS**	**2.00**	**PTR**							
			LS	**2.00**	**BTR**							
			LS	**2.00**	**TATR**							
			LS	**2.00**	**NNTR**							
5 (2) d (vi)	**Sub Total for Improving mobility of frontline staff for forest protection and patrolling**			**8.00**								
**	**Total for works under not more than 20% component**			**1073.00**								
**	**Grand Total for NPV**			**2753.78**								

ANNUAL PLAN OF OPERATIONS 2022-23												
FORMAT VII A---- Forestry and other activities proposed under Net Present Value amount (Please see Rule no. 5(2), 5(3), and proviso under Rule 5(3) (NPV - 04)												
Melghat Tiger Reserve, Amraavti												
.	Works proposed				Location of work						Latlong	
Rule No.	Item of work	Quantity	Rate	Amount (Rs. in Lakhs	Circle	Division	Range	Round	Beat	Compartment No	Latitude	Longitude
1	**2**	**3**	**4**	**5**	**6**	**7**	**8**	**9**	**10**	**11**	**12**	**13**
5 (2)	**Works under Not less than 80 % component (Rule 5 (2))**											
5 (2)(b) i	Artificial Regeneration (AR 4 th year)	15	0.18	2.70	MTR	Melghat WL Dn. Paratwada.	Jamli	Jamli	East Jamli	791	N21 21 055	E77 14 749
		15		**2.70**								
5(2)(d)	**Protection of plantations and forests**											
iv	**Construction, upgradation and maintenance of Protection camps/Protection Huts/Forest Custody/Labour Shed etc.**											
	Khilagota Camp Jatepud Camp	2	20.00	40.00	MTR	Sipna	Hatru	S Hatru W Bhutrum	Sarvarkheda S Bhutrum	487 547	N 21 39 30 N 21 41 23.00	E 077 31 19.6 E 077 13 58.8
	Rakshadoh Camp Suhagi Camp	2	20.00	40.00	MTR	Sipna	Raipur	N Raipur E Retyakheda	Boratyakheda S Kuhi	258 508	N 21 36 69.5 N 21 39 19.9	E 077 15 42.08 E 077 17 86.09
	Taragolai Camp	1	20.00	20.00	MTR	Sipna	Jarida	Mehriam	E Marita	329	N 21 39 21.0	E 077 26 58.0
	`New Building Protection Hut	1	20.00	20.00	MTR	Gugamal	Tarubanda	Adhav	Adhav	-	N-21'25'08.34"	E-077'05'49.07
	New Building Protection Hut Jambukuwa	1	20.00	20.00	MTR	Gugamal	Harisal	S.Anjanzadap	E Malur	610	N-21'60'11.94"	E-077'18'35.49
	Construction of Protection Camp	1	20.00	20.00	MTR	Akot	Narnala	Bordi	S.Shahanur	170	N 21°20.61.62"	E 077°03.322"
	Construction of Protection Huts	1	20.00	20.00	MTR	Pandharkawada	Patanbori	Arli	Daryapur	124	N 19 86 48 32	E 78 42 85 05
	Construction of Protection Huts	2	20.00	40.00	MTR	Pandharkawada	Patanbori	Sunne	Sunne Tembhi	111, 112	N 19 90 98 64 N 19 93 12 97	E 78 48 94 14 E 78 46 86 91
	Construction of Protection Huts	1	20.00	20.00	MTR	Pandharkawada	Parwa	Mathani	Bhadumri	140	N 19 95 40 9	E 78 43 03 3
	Construction of Protection Huts	1	20.00	20.00	MTR	Pandharkawada	Parwa	Mathani	Mathani	143	N 19 95 25 9	E 78 37 93 1
	Total	**13**		**260.00**								
iv	**Construction, upgradation and maintenance of Protection camps/Protection Huts/Forest Custody/Labour Shed etc. (Mission Melghat)**											
	Construction of Protection Camp	1	24.00	24.00	MTR	Melghat WL Dn.	Jamli	Khongada	Khongada	952	N 21 30 09.48	E 77 19 57.80
	Construction of Protection Camp	1	23.00	23.00	MTR	Melghat WL Dn.	Jamli	Girguti	Tembrusoda	21	N 21 33 07.35	E 77 21 84.37

.	Works proposed				Location of work						Latlong	
Rule No.	Item of work	Quantity	Rate	Amount (Rs. in Lakhs	Circle	Division	Range	Round	Beat	Compartment No	Latitude	Longitude
1	**2**	**3**	**4**	**5**	**6**	**7**	**8**	**9**	**10**	**11**	**12**	**13**
	Construction of Protection Camp	1	23.00	23.00	MTR	Melghat WL Dn.	Ghatang		Shirajban	81	N 21 47 81.14	E 77 39 69.36
	Construction of Protection Camp	3	20.00	60.00	MTR	Sipna	Semadoh,	Kolkash, Makhla,	Kolkash, Kuwapati,	150, 129,	N-21'31'21.2" N-21'28'08.7"	E-077'12'51.2" E-077'14'31.9"
	Construction of Protection Camp	1	20.00	20.00	MTR	Sipna	Hatru	Retyakheda	Retyakhada	505	N-21'38'15.2"	E-077'15'43.5"
	Construction of Protection Camp	1	20.00	20.00	MTR	Sipna	Jarida	Madizadap	S. Madizadap	211	N-21'35'79.7"	E-077'22'27.8"
	Construction of Protection Camp	1	20.00	20.00	MTR	Sipna	Churakund	S. Tapi Khamda	S.Chopan	580	N-21'39'17"	E-077'9'30"
	Bandarkahu protection Hut	1	10.00	10.00	MTR	Gugamal	chikhaldara	chikhaldara	borkhadi	122	N 21 27' 25"	E077 16' 23".07
	Chatibalda protection Hut	1	10.00	10.00	MTR	Gugamal	chikhaldara	chikhaldara	churni	38	N 21 24' 32.97"	E077 16' 59".44
	Gugamal protection Hut	1	10.00	10.00	MTR	Gugamal	chikhaldara	Belkund	E gugamal	874	N 21 22' 7.9"	E077 04' 22".01
	Observation Hut	1	10.00	10.00	MTR	Gugamal	chikhaldara	vairat	vairat	34	N 21 38' 62.21"	E077 25' 17".02
	Labour Shed	1	10.00	10.00	MTR	Gugamal	chikhaldara	chikhaldara	chikhaldara		N 21 40 02.77'	E077 31 82.94
	Matakol protection Hut	1	10.00	10.00	MTR	Gugamal	Harisal	Harisal	Harisal	636	N 21 33' 5.88"	E077 07' 7.42
	Thalda protection Hut	1	10.00	10.00	MTR	Gugamal	Harisal	S. Chourakund	Thalda	654	N 21 57' 26.36"	E 077 10 31.75
	Fencing of Kandribaba Protection Camp	1	10.00	10.00	MTR	Gugamal	Tarubanda	Rangarao	Tarubanda	766	N21'25'38.69"	E077'10'13.57"
	Protection Camp Suklihenda and Dalpata.	1	10.00	10.00	MTR	Gugamal	Dhakna	Dhakna, Bhandum,	Suklihenda, South Dabhiya	860, 897	N-21°23'23.6" N-21°24'30.1"	E-077°03'18.1" E-076°58'36.8"
	New Construction of Protection Camp	1	30.00	30.00	MTR	Akot	Wan	Barukheda	Kanjoli	1132	N 21°30.98.44	E 076°84.36.31
	New Construction of Protection Camp	1	30.00	30.00	MTR	Akot	Wan	Nagartas	Wari	1250	N 21°12.42	E 076°46.12
	Total	**20.00**		**340.00**								
v	**Establishment and maintenance of wireless networks**											
	Wireless Station	1	1.50	1.50	MTR	Sipna	Chaurakund	S Tapi	S Kund	560	N 21 43.114	E 077 11.064
	Wireless Station	1	1.50	1.50	MTR	Sipna	Semadoh	Semadoh	Aseri	169	N 21 29 737	E 077 15 390
	Repairs & Maintenance Wireless system	1	1.00	1.00	MTR	Akola	Buldhana	Dongar Khandala	Gondankhed	308	N 20 52 93.74	E 76 30 36.64
	Repairs & Maintenance Wireless system	1	2.00	2.00	MTR	Akola	Khamgaon	Matargaon	Geru	225	N 20.58.45.78	E 76.43.95.79
	Repairs & Maintenance Wireless system	1	2.00	2.00	MTR	Akola	Akola	Vanoja	Vanoja	119	N 20 51 27.66	E 77 10 44.10
	Total	**5**		**8.00**								

.	Works proposed				Location of work						Latlong	
Rule No.	Item of work	Quantity	Rate	Amount (Rs. in Lakhs	Circle	Division	Range	Round	Beat	Compartment No	Latitude	Longitude
1	**2**	**3**	**4**	**5**	**6**	**7**	**8**	**9**	**10**	**11**	**12**	**13**
v	Establishment and maintenance of wireless networks (Mission Melghat)											
	Construction of Wireless Tower at Jamli Range.	1	2.50	2.50	MTR	Melghat WL Dn.	Jamli	Jamli	Jamli		N 21 33 55.13	E 77 26 22.13
	Construction of Wireless Tower at Jamli Range.	1	2.50	2.50	MTR	Melghat WL Dn.	Jamli	Khongada	Khongada	950	N 20 18 50.50	E 77 11 18.30
	Construction of Wireless Tower at Dhulghat Range.	1	2.50	2.50	MTR	Melghat WL Dn.	Dhulghat		Chendo	1298	N 21 18 24 54	E 76 43 57 78
	Construction of Wireless Tower at Akot Range.	1	2.50	2.50	MTR	Melghat WL Dn.	Akot	Khatkali	Kusumbi	935	N 21 30 53.03	E 77 10 06.42
	Construction of Wireless Tower at Akot Range.	1	2.50	2.50	MTR	Melghat WL Dn.	Akot	Khatkali	Zira	956	N 21 28 56.52	E 77 14 53.32
	Wireless Station	1	2.50	2.50	MTR	Sipna	Semadoh	Makhla	Mahakla	191	N 21 31.66.5"	E 077 22.60.8"
	Wireless Station	1	2.50	2.50	MTR	Sipna	Chourakund	Dhokhda	W. Rangubeli	566	N 21 42.58.7"	E 077 08.02.7"
	Wireless Station	1	2.50	2.50	MTR	Sipna	Jarida	Madizadap	Madizadap	212	N 21 36.62.4"	E 077 22.07.6"
	Wireless Station	1	2.50	2.50	MTR	Sipna	Jarida	Chunkhadi	W. Khandukhada	292	N 21 34.48.4"	E 077 24.87.3"
	Wireless Station	1	2.50	2.50	MTR	Sipna	Chourakund	Khamda	S.Tapi	554	N 21 37.16.9"	E 077 12.15.9"
	Wireless Station	1	2.50	2.50	MTR	Gugamal	chikhaldara	chikhaldara	churni	38	N 21 24' 32.97"	E077 16' 59".44
	Wireless Station	1	2.50	2.50	MTR	Gugamal	chikhaldara	chikhaldara	memna	42	N 21 25' 40"	E077 19' 5"
	Wireless Station	1	2.50	2.50	MTR	Gugamal	Harisal	S. Anjanzadap	Malur	614	N 21 35'46"	E077 08' 51"
	Wireless Station	1	2.50	2.50	MTR	Gugamal	Harisal	Harisal	Harisal	636	N 21 53' 64.86"	E077 11 06.1"
	Wireless Station	1	2.50	2.50	MTR	Gugamal	Tarubanda	Adhav	Koha	867	N 21 23' 09.78"	E077 06 42.57"
	Wireless Station	1	2.50	2.50	MTR	Akot	Wan	Talai	E.Talai	1243	N 21°16.46	E 076°44.58
	Wireless Station	1	2.50	2.50	MTR	Akot	Wan	Barukheda	Kanjoli	1132	N 21°30.98.44	E 076°84.36.31
	Wireless Station	1	2.50	2.50	MTR	Akot	Wan	Talai	Wan	1254	N 21°13.45	E 076°47.15
	Wireless Station	1	2.50	2.50	MTR	Akot	Sonala	Sonbardi	Karmoda	364	N 21°15.24.97	E 076°62.20.62
	Wireless Station	1	2.50	2.50	MTR	Akot	Narnala	Bordi	S.Shahanur	170	N 21°20.61.62"	E 077°03.322"
	Total	**20**		**50.00**								

.	Works proposed				Location of work						Latlong	
Rule No.	Item of work	Quantity	Rate	Amount (Rs. in Lakhs	Circle	Division	Range	Round	Beat	Compartment No	Latitude	Longitude
1	**2**	**3**	**4**	**5**	**6**	**7**	**8**	**9**	**10**	**11**	**12**	**13**
5 (2) d (vi)	**Improving mobility of frontline staff for forest protection and patrolling**	**LS**	**LS**	**2.00**	MTR	Melghat WL Dn.						
		LS	**LS**	**2.00**	MTR	Sipna						
		LS	**LS**	**2.00**	MTR	Gugamal						
		LS	**LS**	**2.00**	MTR	Akot						
		LS	**LS**	**2.00**	MTR	Akola						
		LS	**LS**	**2.00**	MTR	Pandharkawada						
5 (2) d (vi)	**Sub Total for Improving mobility of frontline staff for forest protection and patrolling**			**12.00**								
	Total of 5(2)(d)			**670.00**								
5(2)(f)	**Forest fire prevention and control operation**											
ii	**Cutting and burning of fire lines**											
	Fire Line 6 Mtr.	94.50	0.01	1.32	MTR	Sipna	Semadoh	Semadoh Kuvapati Talai Kolkas	Aseri Pipalpadav N Pili Haldukheda Kumbhikhandi N Makhala Kolkas N Pili	166 170 176 177 160 159 168 103 161 176 177 224 223 187 186 147 149 151 152 153	N 21 30 28.10 N 21 28 02.08 N 21 28 09.32 N 21 30 28.60 N 21 30 35.50 N 21 31 41.85 N 21 32 50.80 N 21 29 02.90 N 21 30 08.40	E 077 18 41.30 E 077 18 17.05 E 077 18 34.37 E 077 18 40.20 E 077 17 22.90 E 077 19 39.19 E 077 17 32.02 E 077 11 50.00 E 077 14 96.60
	Fire Line 6 Mtr.	25.50	0.01	0.36	MTR	Sipna	Raipur	Maythanblla Bodpadav S Raipur W Chunkhadi	N Madizadap Maythanballa E Madizadap W Bod Kalampani S Raipur N Kuvapati Belyadoh E Raipur Kumbhikuva Dolaram S Kuhi Kuhi W Raipur Boratyakheda Raipur	273 274 276 497 499 500 501 271 265 498 270 272 241 242 243 244 245 230 255 254 239 240 246 229 228 253 228 227 231 232 233 225 226 234 237 238 239 261 267 269 220 215 218 219 222	N 21 37 75.2 N 21 37 45.3 N 21 36 64.7 N 21 36 09.53 N 21 34 47.9 N 21 34 27.94 N 21 34 07.7 N 21 32 78.0 N 21 33 53.6 N 21 32 98.6 N 21 34 32.3 N 21 34 22.5 N 21 36 58.8 N 21 36 98.7	E 077 21 88.2 E 077 21 98.4 E 077 19 88.6 E 077 17 55.58 E 077 12 21.2 E 077 16 13.97 E 077 14 10.0 E 077 13 91.2 E 077 17 80.2 E 077 16 48.3 E 077 17 77.4 E 077 17 77.6 E 077 14 08.1 E 077 15 67.2

.	Works proposed				Location of work						Latlong	
Rule No.	Item of work	Quantity	Rate	Amount (Rs. in Lakhs	Circle	Division	Range	Round	Beat	Compartment No	Latitude	Longitude
1	**2**	**3**	**4**	**5**	**6**	**7**	**8**	**9**	**10**	**11**	**12**	**13**
	Fire Line 6 Mtr.	127.26	0.01	1.78	MTR	Sipna	Hatru	Sipna Patel S. Hatru N. Hatru E. Bhutrum W. Bhutrum Retyakheda	Hatru S Hatru Sipna Patel Chilati Sumita Bhutrum Ruipathar W Bhutrum E Hatru Sarvarkheda S Sumita N Sumita S Bhutrum W Retyakheda N Retyakheda E Retyakheda S Retyakheda Retyakheda	489 488 492 476 466 473 486 510 473 475 478 483 457 459 460 461 462 464 465 467 463 458 470 523 522 526 516 545 544 543 546 547 529 530 531 544	N 21 38 406 N 21 28 406 N 21 38 15.00 N 21 41 45.7 N 21 41 34.0 N 21 41 07.3 N 21 43 30.48 N 21 43 33.20 N 21 42 04.69 N 21 43 36.00 N 21 42 711 N 21 42 24.45 N 21 41 00 34 N 21 39 07.88 N 21 41 56.58 N 21 39 44.88	E 077 19 617 E 077 19 628 E 077 20 41.00 E 077 20 06.6 E 077 19 35.1 E 077 20 68.1 E 077 19 10.64 E 077 19 12.00 E 077 20 11.43 E 077 16 10.07 E 077 16 766 E 077 14 32.81 E 077 17 07.74 E 077 11 21.21 E 077 14 57.06 E 077 15 46.65
	Fire Line 6 Mtr.	179.00	0.01	2.51	MTR	Sipna	Jarida	Khandukheda Jarida Chunkhadi Khadimal Madizadap Mehariam	W Ghana E Khandukheda E Ghana S Barugavhan N Barugavhan S Jarida S Barugavhan E Chunkhadi N Chunkhadi W Khandukheda W Khadimal E Khadimal Madizadap Mehriam W Marita E marita E Khadimal	302 303 304 300 301 305 306 307 334 403 318 402 400 291 285 289 290 286 296 323 287 323 319 320 314 312 294 277 280 278 281 330 331 322 420 325 328 319 320 322 324	N 21 34 9.66 N 21 33 8.76 N 21 33 16.97 N 21 33 30.51 N 21 33 44.28 N 21 33 47.00 N 21 34 41.08 N 21 34 50.25 N 21 38 18.30 N 21 39 26.83 N 21 38 23.63 N 21 40 24.91 N 21 40 58.50	E 077 26 30.76 E 077 26 6.97 E 077 26 50.92 E 077 27 55.40 E 077 29 7.19 E 077 29 49.36 E 077 29 11.07 E 077 28 17.42 E 077 29 25.24 E 077 29 26.84 E 077 28 26.84 E 077 28 31.28 E 077 29 27.34
	Fire Line 6 Mtr.	54.00	0.01	0.76	MTR	Sipna	Chaurakund	N Chaurakund N Anjanzadap Rangubeli	N Chaurakund Tangada Chopan E Malur N Malur S Chopan E Chaurakund W Kutanga Narsingnala	586 587 660 661 664 601 602 600 605 606 604 599 595 578 577 576	N 21 37 40.40 N 21 36 43.55 N 21 37 31.6 N 21 37 54.1 N 21 39 41.00 N 21 42 01.53	E 077 07 13.10 E 077 05 48.35 E 077 08 38.0 E 077 10 76.8 E 077 07 8.30 E 077 05 56.26
	Sub Total	**480.26**	**0.07**	**6.72**								

.	Works proposed				Location of work						Latlong	
Rule No.	Item of work	Quantity	Rate	Amount (Rs. in Lakhs	Circle	Division	Range	Round	Beat	Compartment No	Latitude	Longitude
1	**2**	**3**	**4**	**5**	**6**	**7**	**8**	**9**	**10**	**11**	**12**	**13**
	Fire Line 12 Mtr.	267.00	0.02	6.03	MTR	Sipna	Semadoh	Semadoh Jawaharkund Kuvapati Makhala Talai Kolkas Pili	Haldukheda Chunaghani Aseri Jawaharkund Masondi S Semadoh E Kuvapati Kuvapati Pipalpadav Semadoh W Makhala Makhala Talai Kumbhikhandi N Makhala Kolkas N Pili S Kolkas Kakarballa Pili Borkhadi	105 117 118 120 169 166 169 104 103 98 96 93 102 99 96 92 107 108 156 161 162 165 157 158 160 168 163 178 181 179 193 192 190 191 192 181 177 183 180 166 171 186 174 223 224 218 217 150 151 149 152 159 148 147 146 132 119 121 131 129 134 135 143 133	N 21 29 42.80 N 21 30 16.10 N 21 30 02.5 N 21 29 56.40 N 21 28 47.03 N 21 28 02.08 N 21 30 45.00 N 21 30 35.50 N 21 30 35.90 N 21 31 37.80 N 21 30 02.80 N 21 31 44.30 N 21 32 76.02 N 21 32 24.01 N 21 30 02.50 N 21 29 43.80 N 21 30 06.00 N 21 28 16.00	E 077 17 40.30 E 077 17 40.30 E 077 18 57.50 E 077 19 00.90 E 077 20 26.08 E 077 18 17.05 E 077 13 59.10 E 077 17 22.90 E 077 18 01.40 E 077 16 35.70 E 077 19 40.90 E 077 23 02.20 E 077 17 33.00 E 077 16 16.13 E 077 18 01.40 E 077 15 23.70 E 077 13 41.40 E 077 13 40.70
	Fire Line 12 Mtr.	345.37	0.02	7.80	MTR	Sipna	Raipur	Maythanblla Bodpadav S Raipur E Retyakheda W Chunkhadi N Raipur	N Madizadap Maythanballa E Madizadap W Bod Kalampani S Raipur N Kuvapati Belyadoh E Raipur Kumbhikuva Dolaram S Kuhi Kuhi W Raipur Boratyakheda Raipur	273 274 276 497 499 500 501 271 265 498 270 272 241 242 243 244 245 230 255 254 239 240 246 229 228 253 228 227 231 232 233 225 226 234 237 238 239 261 267 269 220 215 218 219 222 502 507 508 512 513 514 503 283 264 511 249 250 257 251 252 253 254 255 256 257 258 259 260	N 21 37 75.2 N 21 37 45.3 N 21 36 64.7 N 21 36 09.53 N 21 34 47.9 N 21 34 27.94 N 21 34 07.7 N 21 32 78.0 N 21 33 53.6 N 21 32 98.6 N 21 34 32.3 N 21 34 22.5 N 21 36 58.8 N 21 36 98.7	E 077 21 88.2 E 077 21 98.4 E 077 19 88.6 E 077 17 55.58 E 077 12 21.2 E 077 16 13.97 E 077 14 10.0 E 077 13 91.2 E 077 17 80.2 E 077 16 48.3 E 077 17 77.4 E 077 17 77.6 E 077 14 08.1 E 077 15 67.2

.	Works proposed				Location of work						Latlong	
Rule No.	Item of work	Quantity	Rate	Amount (Rs. in Lakhs	Circle	Division	Range	Round	Beat	Compartment No	Latitude	Longitude
1	**2**	**3**	**4**	**5**	**6**	**7**	**8**	**9**	**10**	**11**	**12**	**13**
	Fire Line 12 Mtr.	228.40	0.02	5.16	MTR	Sipna	Hatru	Sipna Patel S. Hatru N. Hatru E. Bhutrum W. Bhutrum Retyakheda	Hatru S Hatru Sipna Patel Chilati Sumita Bhutrum Ruipathar W Bhutrum E Hatru Sarvarkheda S Sumita N Sumita S Bhutrum W Retyakheda N Retyakheda E Retyakheda S Retyakheda Retyakheda	488 490 494 486 489 491 493 494 496 492 485 484 480 482 473 475 472 511 478 474 466 477 470 471 509 510 469 463 465 467 468 461 462 457 458 459 460 469 468 522 523 526 528 527 545 543 546 547 529 530 533 505 532 535 536 537 538	N 21 56 13.19 N 21 41 00.80 N 21 37 52.62 N 21 39 13.48 N 21 40 55.4 N 21 41 07.0 N 21 41 30.4 N 21 44 02.54 N 21 42 04.74 N 21 42 32.72 N 21 42 259 N 21 42 712 N 21 43 064 N 21 42 259 N 21 42 712 N 21 43 064 N 21 39 07.88 N 21 40 56.86 N 21 40 16.75 N 21 39 29.20 N 21 39 33.88 N 21 38 47.36	E 077 21 38.36 E 077 20 11.40 E 077 18 32.18 E 077 21 34.15 E 077 20 06.1 E 077 20 06.8 E 077 19 21.1 E 077 20 00.29 E 077 20 11.37 E 077 20 57.25 E 077 17 130 E 077 16 766 E 077 16 855 E 077 17 130 E 077 16 766 E 077 16 855 E 077 11 21.21 E 077 15 02.91 E 077 14 38.35 E 077 15 44.43 E 077 15 48.74 E 077 15 42.41
	Fire Line 12 Mtr.	63.50	0.02	1.43	MTR	Sipna	Jarida	Khandukheda Jarida Chunkhadi Khadimal Madizadap Mehariam	W Ghana E Khandukheda E Ghana S Barugavhan N Barugavhan S Jarida S Barugavhan E Chunkhadi N Chunkhadi W Khandukheda E Khadimal Awagad E Madizadap S Madizadap Mehariam E Marita W Marita	302 310 309 399 335 336 332 334 318 291 206 209 210 290 289 285 292 297 316 317 311 312 313 314 281 282 283 211 214 212 275 284 324 329 327 418 419 420 326 330 329 324 328 325	N 21 34 9.66 N 21 33 8.76 N 21 33 16.97 N 21 33 30.51 N 21 33 44.28 N 21 33 47.00 N 21 34 41.08 N 21 34 50.25 N 21 38 18.30 N 21 39 26.83 N 21 38 23.63 N 21 40 24.91 N 21 40 58.50	E 077 26 30.76 E 077 26 6.97 E 077 26 50.92 E 077 27 55.40 E 077 29 7.19 E 077 29 49.36 E 077 29 11.07 E 077 28 17.42 E 077 29 25.24 E 077 29 26.84 E 077 28 26.84 E 077 28 31.28 E 077 29 27.34

.	Works proposed				Location of work						Latlong	
Rule No.	Item of work	Quantity	Rate	Amount (Rs. in Lakhs	Circle	Division	Range	Round	Beat	Compartment No	Latitude	Longitude
1	**2**	**3**	**4**	**5**	**6**	**7**	**8**	**9**	**10**	**11**	**12**	**13**
	Fire Line 12 Mtr.	314.11	0.02	7.10	MTR	Sipna	Chaurakund	Tapi Khamda N Chaurakund Dhokda S Tapi Khokmar N Anjanzadap Rangubeli	Khamda W Chopan N Chaurakund Tangada Chopan E Malur N Malur S Chopan E Chaurakund W Kutanga Narsingnala Chaurakund S Rangubeli Dhokada W Rangubeli E Khamda W Khokmar Khokmar W	574 580 573 556 554 580 581 583 601 603 582 587 586 579 588 591 589 660 661 664 663 562 561 567 564 563 566 565 568 572 548 551 549 550 552 553 554 558 557 555 594 600 602 595 598 599 606 602 578 577 576 575 570 571	N 21 41 12.59 N 21 39 80.00 N 21 41 31.5 N 21 39 19.8 N 21 38 06.07 N 21 38 92.5 N 21 39 16.6 N 21 36 32.57 N 21 37 07.05 N 21 41 73.6 N 21 42 55.4 N 21 39 09.10 N 21 41 21.70 N 21 36 51.61 N 21 36 52.9 N 21 39 00.8 N 21 39 40.56	E 077 09 34.94 E 077 08 73.00 E 077 10 11.3 E 077 10 70.6 E 077 08 50.71 E 077 11 22.1 E 077 10 53.8 E 077 06 58.68 E 077 06 43.7 E 077 08 62.4 E 077 09 37.2 E 077 11 20.97 E 077 11 40.36 E 077 07 16.0 E 077 07 20.4 E 077 06 58.1 E 077 05 44.12
	Sub Total	**1218.38**	**0.02**	**27.52**								
	Fire Line 30 Mtr.	73.50	0.03	2.48	MTR	Sipna	Semadoh	Jawaharkund Kuvapati Makhala Talai Kolkas	Masondi S SemadohAseri E Kuvapati Makhala N Makhala S Kolkas Kakarballa	92 93 94 101 102 166 165 164 163 193 192 187 144 145 146 148	N 21 29 02.02 N 21 30 28.60 N 21 30 49.50 N 21 33 38.40 N 21 27 23.20	E 077 21 32.08 E 077 18 40.20 E 077 21 34.80 E 077 22 47.30 E 077 11 59.02
	Fire Line 30 Mtr.	52.50	0.03	1.77	MTR	Sipna	Raipur	Maythanblla Bodpadav E Retyakheda W Chunkhadi N Raipur	N Madizadap Maythanballa E Madizadap W Bod Kalampani S Raipur N Kuvapati Belyadoh E Raipur Kumbhikuva Dolaram S Kuhi Kuhi W Raipur Boratyakheda Raipur	273 274 276 497 499 500 501 271 265 498 270 272 241 242 243 244 245 230 255 254 239 240 246 229 228 253 261 267 269 220 215 218 219 222 502 507 508 512 513 514 503 283 264 511 249 250 257 251 252 253 254 255 256 257 258 259 260	N 21 37 75.2 N 21 37 45.3 N 21 36 64.7 N 21 36 09.53 N 21 34 47.9 N 21 34 27.94 N 21 34 07.7 N 21 32 78.0 N 21 33 53.6 N 21 32 98.6 N 21 34 32.3 N 21 34 22.5 N 21 36 58.8 N 21 36 98.7	E 077 21 88.2 E 077 21 98.4 E 077 19 88.6 E 077 17 55.58 E 077 12 21.2 E 077 16 13.97 E 077 14 10.0 E 077 13 91.2 E 077 17 80.2 E 077 16 48.3 E 077 17 77.4 E 077 17 77.6 E 077 14 08.1 E 077 15 67.2

.	Works proposed				Location of work						Latlong	
Rule No.	Item of work	Quantity	Rate	Amount (Rs. in Lakhs	Circle	Division	Range	Round	Beat	Compartment No	Latitude	Longitude
1	**2**	**3**	**4**	**5**	**6**	**7**	**8**	**9**	**10**	**11**	**12**	**13**
	Fire Line 30 Mtr.	46.00	0.03	1.55	MTR	Sipna	Hatru	Sipna Patel S. Hatru N. Hatru E. Bhutrum W. Bhutrum Retyakheda	Hatru S Hatru Sipna Patel Chilati Sumita Bhutrum Ruipathar W Bhutrum	488 490 494 492 480 484 482 471 457 458 522 524 528	N 21 38 18.36 N 21 38 16.70 N 21 39 31.77 N 21 41 31.2 N 21 43 55.09 N 21 43 150 N 21 39 44.88	E 077 21 44.66 E 077 20 42.94 E 077 19 58.82 E 077 19 22.4 E 077 17 26.73 E 077 17 170 E 077 15 46.65
	Fire Line 30 Mtr.	92.50	0.03	3.12	MTR	Sipna	Jarida	Khandukheda Jarida Khadimal Madizadap Mehariam	W Ghana E Khandukheda E Ghana S Barugavhan N Barugavhan S Jarida S Barugavhan E Khadimal S Madizadap Madizadap W Marita E Marita	301 300 310 309 308 304 305 306 307 336 338 399 398 400 402 318 403 317 214 213 277 278 418 419 420 327 329	N 21 34 9.66 N 21 33 8.76 N 21 33 16.97 N 21 33 30.51 N 21 33 44.28 N 21 33 47.00 N 21 34 41.08 N 21 34 50.25 N 21 38 18.30 N 21 39 26.83 N 21 38 23.63 N 21 40 24.91 N 21 40 58.50	E 077 26 30.76 E 077 26 6.97 E 077 26 50.92 E 077 27 55.40 E 077 29 7.19 E 077 29 49.36 E 077 29 11.07 E 077 28 17.42 E 077 29 25.24 E 077 29 26.84 E 077 28 26.84 E 077 28 31.28 E 077 29 27.34
	Fire Line 30 Mtr.	54.00	0.03	1.82	MTR	Sipna	Chaurakund	N Chaurakund Dhokda S Tapi Khokmar N Anjanzadap Rangubeli	Tangada S Rangubeli Dhokda W Rangubeli Narsingnala W Kutanga W Rangubeli E Malur S Chopan	660 661 664 663 562 572 564 565 568 561 566 567 548 549 560 606 607 608 569 576 577 578 590 562	N 21 36 43.25 N 21 97 48.06 N 21 42 26.16 N 21 42 50.37 N 21 40 23.5 N 21 37 21.02 N 21 37 35.24 N 21 42 13.03	E 077 05 47.00 E 077 04 29.25 E 077 05 57.54 E 077 10 36.39 E 077 12 40.58 E 077 12 03.7 E 077 04 29.38 E 077 05 55.99
	Sub Total	**318.50**	**0.03**	**10.75**								
	Total	**2017.14**		**45.00**								
	Fire Line 6 Mtr.	179.50	0.01	2.51	MTR	Gugamal	Chikhaldara	Chikhaldara	Vairat, Chikhaldara, Belkund, Khongada	pachamba , Vairat, Kalukundi Jamali, E.Gugamal, S Sukhalihenda, Belkund, Bhopadev, Rupadev, Dhamanikheda, Dhiondriam, Meswada, Borkhadi, Abapur, churani, Memana	N 21 36 43.25	E 077 05 47.00

.	Works proposed				Location of work						Latlong	
Rule No.	Item of work	Quantity	Rate	Amount (Rs. in Lakhs	Circle	Division	Range	Round	Beat	Compartment No	Latitude	Longitude
1	**2**	**3**	**4**	**5**	**6**	**7**	**8**	**9**	**10**	**11**	**12**	**13**
	Fire Line 6 Mtr.	50.76	0.01	0.71	MTR	Gugamal	Dhakana	Dhakana	Dhakana	Borikheda,Dhakna	N-21'23'43.57" N-21'25'23.72"	E-077'05'36.50 E-077'02'42.03
	Fire Line 6 Mtr.	37.30	0.01	0.52	MTR	Gugamal	Harisal	Harisal			N 21 33' 5.88"	E077 07' 7.42
	Fire Line 6 Mtr.	100.75	0.01	1.41	MTR	Gugamal	Tarubanda	Tarubanda			N21'23'15.00"	E077'06'43.50"
	Sub Total	**368.31**	**0.01**	**5.16**								
	Fire Line 12 Mtr.	184.16	0.02	4.24	MTR	Gugamal	Chikhaldara	Chikhaldara	Vairat, Chikhaldara, Belkund, Khongada	pachamba , Vairat, Kalukundi Jamali, E.Gugamal, S Sukhalihenda, Belkund, Bhopadev, Rupadev, Dhamanikheda, Dhiondriam, Meswada, Borkhadi, Abapur, churani, Memana	N 2126 01.6	E 077 17 40.04
	Fire Line 12 Mtr.	218.45	0.02	5.02	MTR	Gugamal	Dhakana	Dhakana	Dhakana	Dhakna, Bhandum, Dolar, Boripati, Borikheda	N-21'00'22.20" N-21'23'43.37"	E-077'05'35.32 E-077'05'36.00
	Fire Line 12 Mtr.	184.16	0.02	4.24	MTR	Gugamal	Harisal	Harisal			N 21 33' 5.88"	E077 07' 7.42
	Fire Line 12 Mtr.	180.57	0.02	4.15	MTR	Gugamal	Tarubanda	Tarubanda			N21'35'25.10"	E077'07'49.8"
	Sub Total	**767.33**	**0.02**	**17.65**								
	Fire Line 30 Mtr.	102.25	0.03	3.45	MTR	Gugamal	Chikhaldara	Vairat, Chikhaldara, Belkund, Khongada	pachamba , Vairat, Kalukundi Jamali, E.Gugamal, S Sukhalihenda, Belkund, Bhopadev, Rupadev, Dhamanikheda, Dhiondriam,	36.37.38.110 41. 42.41 774. 795. 796. 800. 801 34. 35. 788. 789 774. 795. 796. 800. 801	N 2125 49.9	E 077 18 03.9

.	Works proposed				Location of work						Latlong	
Rule No.	Item of work	Quantity	Rate	Amount (Rs. in Lakhs	Circle	Division	Range	Round	Beat	Compartment No	Latitude	Longitude
1	**2**	**3**	**4**	**5**	**6**	**7**	**8**	**9**	**10**	**11**	**12**	**13**
	Fire Line 30 Mtr.	65.30	0.03	2.20	MTR	Gugamal	Dhakana	Dhakana	Borikheda, Dolar, Boripati.	, Junapani, Mamadew,Ranamalur, South Dolar,North Bhandum, Kasmar.	N-21'23'39.89" N-21'22'48.20"	E-076'58'03.89 E-077'00'40.13
	Fire Line 30 Mtr.	28.72	0.03	0.97	MTR	Gugamal	Harisal				N 21 33' 5.88"	E077 07' 7.42
	Fire Line 30 Mtr.	38.28	0.03	1.29	MTR	Gugamal	Tarubanda				N21'35'25.1"	E077'07'49.8"
	Sub Total	**234.55**	**0.03**	**7.92**								
	Total	**1370.19**		**30.72**								
	Fire Line 6 Mtr.	140.20	0.01	1.96	MTR	Akot	Sonala	-	-	--	N 21 09 35.11 "	E 076 37 47.67"
	Fire Line 6 Mtr.	60.40	0.01	0.85	MTR	Akot	Narnla	-	-	--	N 21°20.61.62"	E 077°03.322"
	Fire Line 6 Mtr.	124.00	0.01	1.74	MTR	Akot	Wan	Nagartas	W. Talai	1247	N 21°13.59	E 076°46.0
	Fire Line 6 Mtr.	53.00	0.01	0.74	MTR	Akot	Somthana	Amona	Watch Tower To Kelpani Road	--	N 21°14.25.11"	E 076°57.53.30"
	Fire Line 6 Mtr.	200.70	0.01	2.81	MTR	Akot	Dhargad Somthana Wan, Sonala	-	W.Dhargad	--	N 21°17.621"	E 077°2.573"
	Sub Total	**578.30**		**8.10**								
	Fire Line 12 Mtr.	96.00	0.02	2.21	MTR	Akot	Sonala	-	-	--	N 21 11 16.98 "	E 076 44 29.83"
	Fire Line 12 Mtr.	44.00	0.02	1.01	MTR	Akot	Narnla	-	-	--	N 21°20.61.62"	E 077°03.322"
	Fire Line 12 Mtr.	110.00	0.02	2.53	MTR	Akot	Wan	Talai	W. Talai	1249	N 21°13.53	E 076°44.45
	Fire Line 12 Mtr.	142.00	0.02	3.27	MTR	Akot	Somthana	Amona	Watch Tower To Zendaballya	--	N 21°13.15.65"	E 076°53.06.96"
	Fire Line 12 Mtr.	258.15	0.02	5.94	MTR	Akot	Dhargad Somthana Wan, Sonala	-	Hatboru to Mormatha	--	N 21°15.60"	E 076°58.19"
	Sub Total	**650.15**	**0.02**	**14.95**								
	Fire Line 30 Mtr.	50.15	0.03	1.69	MTR	Akot	Sonala	-	-	--	N 21 11 63.06 "	E 076 45 49.09"
	Fire Line 30 Mtr.	32.00	0.03	1.08	MTR	Akot	Narnla	-	-	--	N 21°20.61.62"	E 077°03.322"
	Fire Line 30 Mtr.	40.50	0.03	1.37	MTR	Akot	Wan	Barukheda	W. Talai	1239 1248	N 21°15.59	E 076°45.10

.	Works proposed				Location of work						Latlong	
Rule No.	Item of work	Quantity	Rate	Amount (Rs. in Lakhs	Circle	Division	Range	Round	Beat	Compartment No	Latitude	Longitude
1	**2**	**3**	**4**	**5**	**6**	**7**	**8**	**9**	**10**	**11**	**12**	**13**
	Fire Line 30 Mtr.	56.50	0.03	1.91	MTR	Akot	Somthana	Borwa	Wadali To Badaghat Division	--	N 21°12.14.7"	E 076°52.17.9"
	Fire Line 30 Mtr.	107.75	0.03	3.64	MTR	Akot	Dhargad Somthana Wan, Sonala	-	Khatkali	--	N 21°15.53"	E 077°30.46"
	Sub Total	**286.90**	**0.03**	**9.68**								
	Total	**1515.35**		**32.73**								
	Fire Line 6 Mtr.	154.97	0.01	2.17	MTR	Akola	Akola	-	-	-	N 20 28 98	E 77 15 52
	Fire Line 6 Mtr.	48.77	0.01	0.68	MTR	Akola	Khamgaon	Botha,Matargaon,Motala	Botha-1,Botha-2,Waki,Matargaon,Harni,Vairagad,Geru,Chinchkhed Band,Pimpalgaon nath,South Kawadgaon,Tarapur	242,243,250,251,252,248,249,244,243,233,234,231,228,235,232,230,245,246,247,227,236,223,224,225,226,298,273,271,300,273,264,272,266,267,264,295,26	N 20 29 935	E 076 25 775
	Fire Line 6 Mtr.	55.09	0.01	0.77	MTR	Akola	Buldhana	Dongarshewali	Borala, Dongarkhadnala-01	2,42,257	N20 31' 45.08"	E076 20' 53.10"
					MTR	Akola	Buldhana	Dongarkhandala	Gondhnkhed,S.devhari, Dongarkhndala-01	30,62,58,285	N20 32' 16.80"	E076 18' 42.63"
					MTR	Akola	Buldhana	Warwand	N devhari, borkhed,tophkhana	30,43,03,311	N20 31' 43.12"	E076 17' 59.01"
					MTR	Akola	Buldhana	Amdapur	Karwand	248	N20 28' 14.69"	E076 23' 47.91"
	Sub Total	**258.83**	**0.01**	**3.62**	**0**							
	Fire Line 12 Mtr.	92.47	0.02	2.13	MTR	Akola	Akola	-	-	-	N 20 36 89	E 77 17 13
	Fire Line 12 Mtr.	20.7	0.02	0.48	MTR	Akola	Khamgaon	Botha,Matargaon,Motala	Botha-1,Botha-2,Waki,Matargaon,Harni,Vairagad,Geru,Chinchkhed Band,Pimpalgaon nath,South Kawadgaon,Tarapur,Paldhag	242,243,250,251,252,248,249,244,243,233,234,231,228,235,232,230,245,246,247,227,236,223,224,225,226,298,273,271,300,273,264,272,266,267,264,295,261,262,240,258,	N 20 36 05 04	E 07617 49 51

.	Works proposed				Location of work						Latlong	
Rule No.	Item of work	Quantity	Rate	Amount (Rs. in Lakhs	Circle	Division	Range	Round	Beat	Compartment No	Latitude	Longitude
1	**2**	**3**	**4**	**5**	**6**	**7**	**8**	**9**	**10**	**11**	**12**	**13**
	Fire Line 12 Mtr.	20.76	0.02	0.48	MTR	Akola	Buldhana	Dongarshewali	Borala, Dongarkhadnala-01	2,42,257	N20 30' 5.21"	E076 20' 6.26
					MTR	Akola	Buldhana	Dongarkhandala	Gondhnkhed,S. devhari, Dongarkhndala-01	30,62,58,285	N20 33' 45.70"	E076 20' 02.31"
					MTR	Akola	Buldhana	Warwand	N devhari, borkhed,tophkhana	30,43,03,311	N20 31' 45.87"	E076 18' 12.77"
					MTR	Akola	Buldhana	Amdapur	Karwand	248	N20 28' 14.69"	E076 23' 47.91"
	Sub Total	**133.93**		**3.08**								
	Total	**392.76**		**6.70**								
	Total	**5295.44**		**115.15**								
iii	**Fire Watchers**											
	Fire Protection Labour 5x8x419x106	4240	0.00	17.77	MTR	Sipna	-	-	-	-	-	-
	Fire Protection Labour 5x8x378x105	1365		5.28	MTR	Akola	Akola	-	-	-		
			Total	**23.05**								
	Total of 5(2)(f)			**138.20**								
5(2)(g)	**Soil and moisture conservation works in the forest**											
	Gabin structure 8 Mtr.	1	0.50	0.50	MTR	Gugamal	Tarubanda	Rangrao	Tarubanda	766	N-21'34'46.37" N-21'34'46.37"	E-077'10'10.32 E-077'10'10.32
	Gabin structure 8 Mtr.	1	0.50	0.50	MTR	Gugamal	Tarubanda	Rangrao	Tarubanda	766	N-21'34'46.37" N-21'34'46.37"	E-077'10'10.32 E-077'10'10.33
	Gabin structure 8 Mtr.	1	0.50	0.50	MTR	Gugamal	Tarubanda	Rangrao	Tarubanda	766	N-21'34'46.37" N-21'34'46.37"	E-077'10'10.32 E-077'10'10.34
	Gabin structure 8 Mtr.	1	0.50	0.50	MTR	Gugamal	Tarubanda	Rangrao	Tarubanda	766	N-21'34'46.37" N-21'34'46.37"	E-077'10'10.32 E-077'10'10.35
	Gabin structure 9 Mtr.	1	0.50	0.50	MTR	Gugamal	Tarubanda	Rangrao	Tarubanda	766	N-21'34'46.37" N-21'34'46.37"	E-077'10'10.32 E-077'10'10.36
	Gabin structure 9 Mtr.	1	0.50	0.50	MTR	Gugamal	Tarubanda	Rangrao	Tarubanda	766	N-21'34'46.37" N-21'34'46.37"	E-077'10'10.32 E-077'10'10.37
	Gabin structure 9 Mtr.	1	0.50	0.50	MTR	Gugamal	Tarubanda	Rangrao	Tarubanda	766	N-21'34'46.37" N-21'34'46.37"	E-077'10'10.32 E-077'10'10.38
	Gabin structure 8 Mtr.	1	0.50	0.50	MTR	Gugamal	Tarubanda	Rangrao	Tarubanda	766	N-21'34'46.37" N-21'34'46.37"	E-077'10'10.32 E-077'10'10.39
	Gabin structure 8 Mtr.	1	0.50	0.50	MTR	Gugamal	Tarubanda	Rangrao	Tarubanda	766	N-21'34'46.37" N-21'34'46.37"	E-077'10'10.32 E-077'10'10.40
	Gabin structure 9 Mtr.	1	0.50	0.50	MTR	Gugamal	Tarubanda	Rangrao	Tarubanda	766	N-21'34'46.37" N-21'34'46.37"	E-077'10'10.32 E-077'10'10.41

.	Works proposed				Location of work						Latlong	
Rule No.	Item of work	Quantity	Rate	Amount (Rs. in Lakhs	Circle	Division	Range	Round	Beat	Compartment No	Latitude	Longitude
1	**2**	**3**	**4**	**5**	**6**	**7**	**8**	**9**	**10**	**11**	**12**	**13**
	Gabin structure 10 Mtr.	1	0.50	0.50	MTR	Gugamal	Tarubanda	Rangrao	Tarubanda	762	N-21'34'46.37" N-21'34'46.37"	E-077'10'10.32 E-077'10'10.42
	Gabin structure 10 Mtr.	1	0.50	0.50	MTR	Gugamal	Tarubanda	Rangrao	Tarubanda	762	N-21'34'46.37" N-21'34'46.37"	E-077'10'10.32 E-077'10'10.43
	Gabin structure 10 Mtr.	1	0.50	0.50	MTR	Gugamal	Tarubanda	Rangrao	Tarubanda	762	N-21'34'46.37" N-21'34'46.37"	E-077'10'10.32 E-077'10'10.44
	Gabin structure 10 Mtr.	1	0.50	0.50	MTR	Gugamal	Tarubanda	Rangrao	Tarubanda	762	N-21'34'46.37" N-21'34'46.37"	E-077'10'10.32 E-077'10'10.45
	Gabin structure 10 Mtr.	1	0.50	0.50	MTR	Gugamal	Tarubanda	Rangrao	Tarubanda	762	N-21'34'46.37" N-21'34'46.37"	E-077'10'10.32 E-077'10'10.46
5(2)(g)	Gabin structure 10 Mtr.	1	0.50	0.50	MTR	Gugamal	Tarubanda	Rangrao	Tarubanda	762	N-21'34'46.37" N-21'34'46.37"	E-077'10'10.32 E-077'10'10.47
	Gabin structure 10 Mtr.	1	0.50	0.50	MTR	Gugamal	Tarubanda	Rangrao	Tarubanda	762	N-21'34'46.37" N-21'34'46.37"	E-077'10'10.32 E-077'10'10.48
	Gabin structure 10 Mtr.	1	0.50	0.50	MTR	Gugamal	Tarubanda	Rangrao	Tarubanda	762	N-21'34'46.37" N-21'34'46.37"	E-077'10'10.32 E-077'10'10.49
	Gabin structure 9 Mtr.	1	0.50	0.50	MTR	Gugamal	Tarubanda	Rangrao	Tarubanda	762	N-21'34'46.37" N-21'34'46.37"	E-077'10'10.32 E-077'10'10.50
	Gabin structure 9 Mtr.	1	0.50	0.50	MTR	Gugamal	Tarubanda	Rangrao	Tarubanda	762	N-21'34'46.37" N-21'34'46.37"	E-077'10'10.32 E-077'10'10.51
	Gabin structure 7 Mtr.	1	0.50	0.50	MTR	Gugamal	Chikhaldra	Vairat	Vairat	7,81,782	N-21'24.'57.10"	E-077'14'50.51
	Gabin structure 7 Mtr.	1	0.50	0.50	MTR	Gugamal	Chikhaldra	Vairat	Vairat	7,81,782	N-21'24.'57.10"	E-077'14'50.51
	Gabin structure 7 Mtr.	1	0.50	0.50	MTR	Gugamal	Chikhaldra	Vairat	Vairat	7,81,782	N-21'24.'57.10"	E-077'14'50.51
	Gabin structure 8 Mtr.	1	0.50	0.50	MTR	Gugamal	Chikhaldra	Vairat	Vairat	7,81,782	N-21'24.'57.10"	E-077'14'50.51
	Gabin structure 8 Mtr.	1	0.50	0.50	MTR	Gugamal	Chikhaldra	Vairat	Vairat	7,81,782	N-21'24.'57.10"	E-077'14'50.51
	Gabin structure 8 Mtr.	1	0.50	0.50	MTR	Gugamal	Chikhaldra	Vairat	Vairat	7,81,782	N-21'24.'57.10"	E-077'14'50.51
	Gabin structure 10 Mtr.	1	0.50	0.50	MTR	Gugamal	Chikhaldra	Vairat	Vairat	7,81,782	N-21'24.'57.10"	E-077'14'50.51
	Gabin structure 10 Mtr.	1	0.50	0.50	MTR	Gugamal	Chikhaldra	Vairat	Vairat	7,81,782	N-21'24.'57.10"	E-077'14'50.51
	Gabin structure 10 Mtr.	1	0.50	0.50	MTR	Gugamal	Chikhaldra	Vairat	Vairat	7,81,782	N-21'24.'57.10"	E-077'14'50.51
	Gabin structure 10 Mtr.	1	0.50	0.50	MTR	Gugamal	Chikhaldra	Vairat	Vairat	7,81,782	N-21'24.'57.10"	E-077'14'50.51
	Gabin Drain	1	0.50	0.50	MTR	Gugamal	Chikhaldra	Vairat	Kalukundi	801	N-21'22.'32.7"	E-077'14'72.7
	Gabin Drain	1	0.50	0.50	MTR	Gugamal	Chikhaldra	Vairat	Kalukundi	801	N-21'22.'32"	E-077'14'63
	Gabin Drain	1	0.50	0.50	MTR	Gugamal	Chikhaldra	Vairat	Kalukundi	801	N-21'21.'9.62"	E-077'13'0.99
	Gabin Drain	1	0.50	0.50	MTR	Gugamal	Chikhaldra	Vairat	Kalukundi	801	N-21'21.'8.67"	E-077'13'8.5
	Gabin Drain	1	0.50	0.50	MTR	Gugamal	Chikhaldra	Vairat	Kalukundi	801	N-21'21.'6.93"	E-077'12'9.69
	Gabin Drain	1	0.50	0.50	MTR	Gugamal	Chikhaldra	Vairat	Kalukundi	801	N-21'21.'629"	E-077'12'895

.	Works proposed				Location of work						Latlong	
Rule No.	Item of work	Quantity	Rate	Amount (Rs. in Lakhs	Circle	Division	Range	Round	Beat	Compartment No	Latitude	Longitude
1	**2**	**3**	**4**	**5**	**6**	**7**	**8**	**9**	**10**	**11**	**12**	**13**
5(2)(g)	Gabin Drain	1	0.50	0.50	MTR	Gugamal	Chikhaldra	Vairat	Kalukundi	801	N-21'21.'624"	E-077'12'867
	Gabin Drain	1	0.50	0.50	MTR	Gugamal	Chikhaldra	Vairat	Kalukundi	801	N-21'21.'616"	E-077'12'865
	Gabin Drain	1	0.50	0.50	MTR	Gugamal	Chikhaldra	Vairat	Kalukundi	801	N-21'21.'586"	E-077'12'863
	Gabin Drain	1	0.50	0.50	MTR	Gugamal	Chikhaldra	Vairat	Kalukundi	801	N-21'21.'515"	E-077'12'827
	Total	**40.00**		**20.00**								
	Gabion Structure	5	0.50	2.50	MTR	Akola	Akola	Vanoja	Fetra	-	*77º10.00.16*	20º22.37.77
		5	0.50	2.50	MTR	Akola	Akola	Vanoja	Kasmar	-	*77º10.33.00*	20º25.44.20
		5	0.50	2.50	MTR	Akola	Akola	Vanoja	Yedshi	-	*77º11.02.40*	20º23.00.96
		5	0.50	2.50	MTR	Akola	Akola	Vanoja	Pimplsenda	-	*77º*12.*02.20*	20º22.38.58
		5	0.50	2.50	MTR	Akola	Akola	Somtahana	Girda	-	*77º*30.*02.20*	20º25.22.90
		5	0.50	2.50	MTR	Akola	Akola	Somthana	Somthana	-	*77º*33.*23.20*	20º26.13.50
	Total	**30**		**15.00**								
i	Construction of Gabiyan Bandhara	30	0.50	15.00	MTR	Pandharkawada	Kharbi	Bori, Gadi	Titavi, Erandi, Vadgaon, Bori	575, 582	N 19° 30' 19"	E 78° 6' 36"
		30		**15.00**								
		100.00		**50.00**								
	Construction of Gabiyan Bandhara (Mission Melghat)	1.00	0.40	0.40	MTR	Melghat WL Dn.	Akot	Khatkali	Zira	958	N 21 17 07.35	E 77 07 03.46
		1.00	0.40	0.40	MTR	Melghat WL Dn.	Akot	Khatkali	Zira	958	N 21 17 07.47	E 77 07 03.60
		1.00	0.40	0.40	MTR	Melghat WL Dn.	Akot	Khatkali	Zira	958	N 21 17 08.10	E 77 07 04.37
		2.00	0.40	0.80	MTR	Melghat WL Dn.	Akot	Khatkali	Zira	958	N 21 17 08.27	E 77 07 04.58
		1.00	0.40	0.40	MTR	Melghat WL Dn.	Akot	Khatkali	Zira	958	N 21 17 13.24	E 77 03 15.16
		1.00	0.40	0.40	MTR	Melghat WL Dn.	Akot	Khatkali	Zira	958	N 21 17 13.24	E 77 03 15.46
		1.00	0.40	0.40	MTR	Melghat WL Dn.	Akot	Khatkali	Zira	958	N 21 17 13.24	E 77 03 15.16
		1.00	0.40	0.40	MTR	Melghat WL Dn.	Akot	Khatkali	Zira	958	N 21 17 13.24	E 77 03 15.46
		2.00	0.40	0.80	MTR	Melghat WL Dn.	Akot	Khatkali	Zira	958	N 21 17 13.48	E 77 03 15.60

.	Works proposed				Location of work						Latlong	
Rule No.	Item of work	Quantity	Rate	Amount (Rs. in Lakhs	Circle	Division	Range	Round	Beat	Compartment No	Latitude	Longitude
1	**2**	**3**	**4**	**5**	**6**	**7**	**8**	**9**	**10**	**11**	**12**	**13**
	Construction of Gabiyan Bandhara (Mission Melghat)	1.00	0.40	0.40	MTR	Melghat WL Dn.	Akot	Khatkali	Zira	958	N 21 17 14.10	E 77 03 16.21
		1.00	0.40	0.40	MTR	Melghat WL Dn.	Ghatang	Bhawai	East Taora	77	N21.29.46.59	E077.24.11.59
		1.00	0.40	0.40	MTR	Melghat WL Dn.	Ghatang	Bhawai	East Taora	77	N21.29.50.52	E077.24.10.55
		1.00	0.40	0.40	MTR	Melghat WL Dn.	Ghatang	Bhawai	East Taora	77	N21.29.55.39	E077.24.04.03
		2.00	0.40	0.80	MTR	Melghat WL Dn.	Ghatang	Bhawai	East Semadoh	84	N21.29.50.52	E077.24.10.55
		2.00	0.40	0.80	MTR	Melghat WL Dn.	Ghatang	Bhawai	East Semadoh	84	N21.29.24.11	E077.22.52.01
		1.00	0.40	0.40	MTR	Melghat WL Dn.	Ghatang	Bhawai	East Semadoh	84	N21.29.25.63	E077.22.52.43
		2.00	0.40	0.80	MTR	Melghat WL Dn.	Ghatang	Bhawai	East Semadoh	84	N21.29.26.62	E077.22.48.77
		2.00	0.40	0.80	MTR	Melghat WL Dn.	Ghatang	Bhawai	East Semadoh	84	N21.29.28.43	E077.22.47.59
		1.00	0.40	0.40	MTR	Melghat WL Dn.	Ghatang	Bhawai	East Semadoh	84	N21.29.33.15	E077.22.40.56
		1.00	0.40	0.40	MTR	Melghat WL Dn.	Ghatang	Bhawai	East Semadoh	84	N21.29.34.51	E077.22.38.70
		1.00	0.40	0.40	MTR	Melghat WL Dn.	Ghatang	Bhawai	East Semadoh	84	N21.29.22.93	E077.22.32.83
		2.00	0.40	0.80	MTR	Melghat WL Dn.	Ghatang	Bhawai	East Semadoh	84	N21.29.22.29	E077.22.32.42
		1.00	0.40	0.40	MTR	Melghat WL Dn.	Ghatang	Bhawai	East Semadoh	84	N21.29.22.94	E077.22.32.88
		2.00	0.40	0.80	MTR	Melghat WL Dn.	Ghatang	Bhawai	East Semadoh	84	N21.29.19.97	E077.22.34.28
		1.00	0.40	0.40	MTR	Melghat WL Dn.	Ghatang	Bhawai	East Semadoh	84	N21.29.16.58	E077.22.35.44
		1.00	0.40	0.40	MTR	Melghat WL Dn.	Ghatang	Bhawai	East Semadoh	84	N21.29.16.58	E077.22.35.44
		1.00	0.40	0.40	MTR	Melghat WL Dn.	Ghatang	Bhawai	East Semadoh	84	N21.29.24.33	E077.22.39.41
		1.00	0.40	0.40	MTR	Melghat WL Dn.	Ghatang	Bhawai	East Semadoh	84	N21.29.24.33	E077.22.39.41
		2.00	0.40	0.80	MTR	Melghat WL Dn.	Ghatang	Bhawai	East Semadoh	84	N21.29.25.30	E077.22.39.21
		1.00	0.40	0.40	MTR	Melghat WL Dn.	Ghatang	Bhawai	East Semadoh	84	N21.29.26.12	E077.22.40.07
		2.00	0.40	0.80	MTR	Melghat WL Dn.	Ghatang	Bhawai	East Semadoh	84	N21.29.27.12	E077.22.38.12
		1.00	0.40	0.40	MTR	Melghat WL Dn.	Ghatang	Masondi	South Masondi	51	N21.28.37.41	E077.21.19.56
		1.00	0.40	0.40	MTR	Melghat WL Dn.	Ghatang	Ghatang	Shirajban	83	N21.29.04.86	E077.23.37.70

.	Works proposed				Location of work						Latlong	
Rule No.	Item of work	Quantity	Rate	Amount (Rs. in Lakhs	Circle	Division	Range	Round	Beat	Compartment No	Latitude	Longitude
1	**2**	**3**	**4**	**5**	**6**	**7**	**8**	**9**	**10**	**11**	**12**	**13**
	Construction of Gabiyan Bandhara (Mission Melghat)	1.00	0.40	0.40	MTR	Melghat WL Dn.	Ghatang	Ghatang	Shirajban	83	N21.29.06.02	E077.23.37.77
		2.00	0.40	0.80	MTR	Melghat WL Dn.	Ghatang	Ghatang	Shirajban	83	N21.29.06.64	E077.23.38.01
		1.00	0.40	0.40	MTR	Melghat WL Dn.	Ghatang	Ghatang	Shirajban	83	N21.29.07.36	E077.23.37.74
		1.00	0.40	0.40	MTR	Melghat WL Dn.	Ghatang	Ghatang	Shirajban	83	N21.29.08.17	E077.23.38.12
		1.00	0.40	0.40	MTR	Melghat WL Dn.	Ghatang	Ghatang	Shirajban	81	N21.28.29.72	E077.24.07.83
		1.00	0.40	0.40	MTR	Melghat WL Dn.	Ghatang	Ghatang	Shirajban	81	N21.28.30.44	E077.24.08.51
		1.00	0.40	0.40	MTR	Melghat WL Dn.	Ghatang	Ghatang	Shirajban	81	N21.28.31.85	E077.24.03.31
		1.00	0.40	0.40	MTR	Melghat WL Dn.	Ghatang	Ghatang	Shirajban	85	N21.28.58.54	E077.23.32.99
		1.00	0.40	0.40	MTR	Melghat WL Dn.	Ghatang	Ghatang	Shirajban	85	N21.28.59.86	E077.23.31.29
		1.00	0.40	0.40	MTR	Melghat WL Dn.	Ghatang	Ghatang	Shirajban	85	N21.29.00.89	E077.23.32.14
		1.00	0.40	0.40	MTR	Melghat WL Dn.	Ghatang	Ghatang	Shirajban	83	N21.29.02.46	E077.23.34.82
		1.00	0.40	0.40	MTR	Melghat WL Dn.	Ghatang	Ghatang	Shirajban	83	N21.29.03.32	E077.23.35.70
		1.00	0.40	0.40	MTR	Melghat WL Dn.	Ghatang	Ghatang	Shirajban	83	N21.29.04.87	E077.23.35.21
		1.00	0.40	0.40	MTR	Melghat WL Dn.	Ghatang	Ghatang	Shirajban	83	N21.29.05.02	E077.23.35.45
		1.00	0.40	0.40	MTR	Melghat WL Dn.	Ghatang	Ghatang	Shirajban	83	N21.29.07.29	E077.23.36.39
		1.00	0.40	0.40	MTR	Melghat WL Dn.	Ghatang	Ghatang	Shirajban	81	N21.28.42.23	E077.23.59.16
		1.00	0.40	0.40	MTR	Melghat WL Dn.	Ghatang	Ghatang	Shirajban	81	N21.28.41.94	E077.23.59.78
		1.00	0.40	0.40	MTR	Melghat WL Dn.	Ghatang	Ghatang	Shirajban	81	N21.28.42.25	E077.24.00.81
		1.00	0.40	0.40	MTR	Melghat WL Dn.	Ghatang	Ghatang	Shirajban	81	N21.28.42.68	E077.24.01.43
		1.00	0.40	0.40	MTR	Melghat WL Dn.	Ghatang	Ghatang	Shirajban	81	N21.28.43.23	E077.24.02.58
		1.00	0.40	0.40	MTR	Melghat WL Dn.	Ghatang	Ghatang	Shirajban	85	N21.28.35.67	E077.23.51.90
		1.00	0.40	0.40	MTR	Melghat WL Dn.	Ghatang	Ghatang	Shirajban	85	N21.28.35.37	E077.23.52.47
		1.00	0.40	0.40	MTR	Melghat WL Dn.	Akot	Popatkheda	Malkapur	984	N 21 15 17.22	E 77 02 49.90
		1.00	0.40	0.40	MTR	Melghat WL Dn.	Akot	Popatkheda	Malkapur	984	N 21 15 17.49	E 77 02 57.19

.	Works proposed				Location of work						Latlong	
Rule No.	Item of work	Quantity	Rate	Amount (Rs. in Lakhs	Circle	Division	Range	Round	Beat	Compartment No	Latitude	Longitude
1	**2**	**3**	**4**	**5**	**6**	**7**	**8**	**9**	**10**	**11**	**12**	**13**
	Construction of Gabiyan Bandhara (Mission Melghat)	1.00	0.40	0.40	MTR	Melghat WL Dn.	Akot	Popatkheda	Malkapur	984	N 21 15 18.59	E 77 02 44.08
		1.00	0.40	0.40	MTR	Melghat WL Dn.	Akot	Popatkheda	Malkapur	984	N 21 15 08.35	E 77 02 42.87
		1.00	0.40	0.40	MTR	Melghat WL Dn.	Akot	Popatkheda	Malkapur	984	N 21 15 17.92	E 77 02 29.78
		1.00	0.40	0.40	MTR	Melghat WL Dn.	Akot	Popatkheda	Malkapur	1018	N 21 16 22.96	E 77 02 44.09
		1.00	0.40	0.40	MTR	Melghat WL Dn.	Akot	Popatkheda	Malkapur	1018	N 21 15 22.79	E 77 02 36.82
		1.00	0.40	0.40	MTR	Melghat WL Dn.	Akot	Popatkheda	Malkapur	1018	N 21 14 62.98	E 77 04 27.46
		1.00	0.40	0.40	MTR	Melghat WL Dn.	Akot	Popatkheda	Malkapur	1018	N 21 15 38.88	E 77 04 48.26
		1.00	0.40	0.40	MTR	Melghat WL Dn.	Akot	Popatkheda	Popatkheda	1021	N 21 13 47.26	E 77 04 18.65
		1.00	0.40	0.40	MTR	Melghat WL Dn.	Akot	Popatkheda	Popatkheda	1021	N 21 13 24.86	E 77 04 18.58
		1.00	0.40	0.40	MTR	Melghat WL Dn.	Akot	Popatkheda	Malkapur	984	N 21 16 18.06	E 77 02 53.01
		1.00	0.40	0.40	MTR	Melghat WL Dn.	Akot	Popatkheda	Malkapur	984	N 21 15 17.49	E 77 02 57.19
		1.00	0.40	0.40	MTR	Melghat WL Dn.	Akot	Popatkheda	Popatkheda	1021	N 21 13 42.60	E 77 04 12.71
		1.00	0.40	0.40	MTR	Melghat WL Dn.	Akot	Popatkheda	Popatkheda	1021	N 21 13 36.96	E 77 04 17.40
		1.00	0.40	0.40	MTR	Melghat WL Dn.	Akot	Popatkheda	Malkapur	984	N 21 15 16.20	E 77 02 51.12
		1.00	0.40	0.40	MTR	Melghat WL Dn.	Akot	Popatkheda	Malkapur	984	N 21 15 16.20	E 77 02 51.12
		1.00	0.40	0.40	MTR	Melghat WL Dn.	Akot	Popatkheda	Malkapur	1018	N 21 14 33.88	E 77 04 28.94
		1.00	0.40	0.40	MTR	Melghat WL Dn.	Akot	Popatkheda	Malkapur	1018	N 21 13 33.58	E 77 03 48.76
		1.00	0.40	0.40	MTR	Melghat WL Dn.	Akot	Popatkheda	Malkapur	1018	N 21 13 19.58	E 77 03 28.78
		1.00	0.40	0.40	MTR	Melghat WL Dn.	Akot	Popatkheda	Malkapur	1018	N 21 24 46.97	E 77 04 77.98
		1.00	0.40	0.40	MTR	Melghat WL Dn.	Akot	Popatkheda	Malkapur	1018	N 21 15 20.07	E 77 02 35.25
		1.00	0.40	0.40	MTR	Melghat WL Dn.	Akot	Popatkheda	Malkapur	1018	N 21 16 22.96	E 77 02 44.09
		1.00	0.40	0.40	MTR	Melghat WL Dn.	Akot	Popatkheda	Malkapur	1018	N 21 13 26.68	E 77 03 48.28
		1.00	0.40	0.40	MTR	Melghat WL Dn.	Akot	Popatkheda	Malkapur	1018	N 21 15 22.87	E 77 02 30.12
		1.00	0.40	0.40	MTR	Melghat WL Dn.	Akot	Popatkheda	Malkapur	1018	N 21 14 28.92	E 77 04 48.52

.	Works proposed				Location of work						Latlong	
Rule No.	Item of work	Quantity	Rate	Amount (Rs. in Lakhs	Circle	Division	Range	Round	Beat	Compartment No	Latitude	Longitude
1	**2**	**3**	**4**	**5**	**6**	**7**	**8**	**9**	**10**	**11**	**12**	**13**
	Construction of Gabiyan Bandhara (Mission Melghat)	1.00	0.40	0.40	MTR	Melghat WL Dn.	Akot	Popatkheda	Malkapur	1018	N 21 14 28.92	E 77 04 48.52
		1.00	0.40	0.40	MTR	Melghat WL Dn.	Akot	Popatkheda	Malkapur	1018	N 21 14 09.66	E 77 03 57.82
		1.00	0.40	0.40	MTR	Melghat WL Dn.	Akot	Popatkheda	Malkapur	1018	N 21 13 08.69	E 77 03 19.62
		1.00	0.40	0.40	MTR	Melghat WL Dn.	Akot	Popatkheda	Malkapur	1018	N 21 14 22.98	E 77 04 47.76
		1.00	0.40	0.40	MTR	Melghat WL Dn.	Akot	Popatkheda	Malkapur	1018	N 21 13 17.96	E 77 03 28.99
		1.00	0.40	0.40	MTR	Melghat WL Dn.	Akot	Popatkheda	Malkapur	1018	N 21 15 24.13	E 77 02 03.08
		1.00	0.40	0.40	MTR	Melghat WL Dn.	Akot	Popatkheda	Malkapur	1018	N 21 14 20.09	E 77 03 11.48
		1.00	0.40	0.40	MTR	Melghat WL Dn.	Akot	Khatkali	Zira	957	N 21 17 13.10	E 77 03 38.56
		100.00		**40.00**								
		3.00	0.40	1.20	MTR	Sipna	Raipur	N. Raipur	W. Raipur	257	N 21° 36' 55.24"	E 77° 15' 10.90"
		4.00	0.40	1.60	MTR	Sipna	Raipur	N. Raipur	Borathakhada	252	N 21° 33' 17"	E 77° 16' 23"
		4.00	0.40	1.60	MTR	Sipna	Raipur	W. chunkhadi	East Raipur	268	N 21° 35' 35.11"	E 77° 19' 52.19"
		3.00	0.40	1.20	MTR	Sipna	Raipur	W. chunkhadi	Beladoh	261	N 21° 35' 50.83"	E 77° 19' 43.41"
		3.00	0.40	1.20	MTR	Sipna	Raipur	S. Raipur	N. Kuwapati	227	N 21° 33' 17"	E 77° 16' 23"
		4.00	0.40	1.60	MTR	Sipna	Raipur	South Raipur	Daithkahu	233	N 21° 32' 10.5"	E 77° 15' 18.8"
		3.00	0.40	1.20	MTR	Sipna	Raipur	Maithanballa	W. Madizadap	273	N 21° 37'081 15"	E 77° 20.298' 11"
		5.00	0.40	2.00	MTR	Sipna	Raipur	Maithanballa	N. Madizadap	271	N 21° 37.112' 02"	E 77° 20.297' 05"
		12.00	0.40	4.80	MTR	Sipna	Hatru	Retyakheda	Retyakheda	532	N21 43'20.01	E077 17:43.01"
		9.00	0.40	3.60	MTR	Sipna	Hatru	Retyakheda	Retyakheda	505	N21 38'08.45"	E077°15'34.40"
		10.00	0.40	4.00	MTR	Sipna	Hatru	Sipna patel	Hatru	488	N21 39'15.00"	E077°19'30.78"
		16.00	0.40	6.40	MTR	Sipna	Hatru	W.Bhutrum	S.Bhutrum	529	N21 41'18.19"	E077°14'07.16"
		5.00	0.40	2.00	MTR	Sipna	Jarida	W.Ghana	Khandukheda	300	21 33 56.00	077 26 13.20
		5.00	0.40	2.00	MTR	Sipna	Jarida	E.Ghana	Khandukheda	306	21 34 12.55	077 28 43.28
		5.00	0.40	2.00	MTR	Sipna	Jarida	E.Khandukheda	Khandukheda	309	21 34 40.66	077 28 36.75

.	Works proposed				Location of work						Latlong	
Rule No.	Item of work	Quantity	Rate	Amount (Rs. in Lakhs	Circle	Division	Range	Round	Beat	Compartment No	Latitude	Longitude
1	**2**	**3**	**4**	**5**	**6**	**7**	**8**	**9**	**10**	**11**	**12**	**13**
	Construction of Gabiyan Bandhara (Mission Melghat)	10.00	0.40	4.00	MTR	Sipna	Jarida	E. Madizadp	Madizadp	283	21 36 40.13	077 22 34.23
		3.00	0.40	1.20	MTR	Sipna	Jarida	E. Madizadp	Madizadp	328	21 38 37.8	077 25 41.7
		2.00	0.40	0.80	MTR	Sipna	Jarida	E.Marita	Mehariyam	325	21 38 16.5	077 25 10.9
		1.00	0.40	0.40	MTR	Sipna	Jarida	E.Marita	Mehariyam	300	21 33 31.56	077 26 12.95
		10.00	0.40	4.00	MTR	Sipna	Chourakund	W. Chourakund	W. Tangada	660	N21 36'968"	E077°05.72"
		8.00	0.40	3.20	MTR	Sipna	Chourakund	W. Chourakund	Chourakund	588	N21 37' 17.44"	E077 07' 02.02"
		14.00	0.40	5.60	MTR	Sipna	Chourakund	W.Khokmaar	S. Tapi	550	N21 40' 16.58"	E077 12' 20.82"
		1.00	0.40	0.40	MTR	Sipna	Chourakund	Khokmaar	Khokmaar	551	N21 39'28.10"	E077 11'35.04"
		4.00	0.40	1.60	MTR	Sipna	Semadoh	Semadoh	Aseri	170	N२१°३०'४४.४६"	E ०७७°१८'४७.४५"
		1.00	0.40	0.40	MTR	Sipna	Semadoh	Semadoh	Aseri	166	N२१°३.० ३१.७५"	E ०७७°१८'३६.१२".
		145.00		**58.00**								
		5.00	0.40	2.00	MTR	Gugamal	Chikhaldra	Chikhaldra	memna	109	N21 25 51 62	E077 18 05 33
		6.00	0.40	2.40	MTR	Gugamal	Chikhaldra	khongda	dhundriaam	942	N21°32'45.20"	E77°13'09.92"
		5.00	0.40	2.00	MTR	Gugamal	Chikhaldra	Chikhaldra	memna	109	N21 25 51 62	E077 18 05 33
		6.00	0.40	2.40	MTR	Gugamal	Chikhaldra	chikhaldara	borkhadi	12,21,15,114	N21°45'71.72"	E77°27'52.'81"
		6.00	0.40	2.40	MTR	Gugamal	Chikhaldra	Chikhaldra	memna	109	N21 25 51 62	E077 18 05 33
		10.00	0.40	4.00	MTR	Gugamal	Tarubanda	Koha	Shipanakhandi	820	N21'24'15.85"	E077'09'49.61"
		10.00	0.40	4.00	MTR	Gugamal	Tarubanda	Rangarao	Amrai	770	N21'26'50.95"	E077'11'07.18"
		7.00	0.40	2.80	MTR	Gugamal	Tarubanda	Rangarao	Tarubanda	756	N21'27'11.76"	E077'07'35.17"
		20.00	0.40	8.00	MTR	Gugamal	Dhakna	Dolar	Dolar	1141	N-21'20.'35.36"	E-076'57'12.03"
		13.00	0.40	5.20	MTR	Gugamal	Harisal	Mangiya	Banabhura	619	N 21 33 10.19	E 077 10 42..37
		12.00	0.40	4.80	MTR	Gugamal	Harisal	Mangiya	Khari	630	N 21 32 56.03	E 077 09 42.50
		100.00		**40.00**								
		6.00	0.40	2.40	MTR	Akot	Sonala	Sonbardi	Sonbardi	363	N 21 09 32.05 "	E 076 37 42.39"

.	Works proposed				Location of work						Latlong	
Rule No.	Item of work	Quantity	Rate	Amount (Rs. in Lakhs	Circle	Division	Range	Round	Beat	Compartment No	Latitude	Longitude
1	**2**	**3**	**4**	**5**	**6**	**7**	**8**	**9**	**10**	**11**	**12**	**13**
	Construction of Gabiyan Bandhara (Mission Melghat)	5.00	0.40	2.00	MTR	Akot	Sonala	Sonala	Rohinkhidki	38	N 21 11 13.22 "	E 076 44 43.38"
		5.00	0.40	2.00	MTR	Akot	Sonala	Sonbardi	Pingli	454	N 21 10 08.05 "	E 076 44 18.77"
		6.00	0.40	2.40	MTR	Akot	Sonala	Sonala	Salwan	43	N 21 12 14.08 "	E 076 45 29.03"
		2.00	0.40	0.80	MTR	Akot	Sonala	Palaskundi	Anyar	350	N 21 16 37.79 "	E 076 43 15.93"
		6.00	0.40	2.40	MTR	Akot	Sonala	Palaskundi	N.Mangeri	353	N 21 16 55.89 "	E 076 41 20.05"
		9.00	0.40	3.60	MTR	Akot	Somthana	Amona	E.Dhargad	1072	N 21°14.25.88	E 076°59.38.16
		8.00	0.40	3.20	MTR	Akot	Somthana	Amona	Amona	1071	N 21°14.09.04	E 076°51.49.65
		6.00	0.40	2.40	MTR	Akot	Somthana	Borwa	W.Borwa	1084	N 21°12.33.85	E 076°53.23.78
		6.00	0.40	2.40	MTR	Akot	Somthana	Somthana	Kelpani	1097	N 21°15.01.90	E 076°55.30.83
		6.00	0.40	2.40	MTR	Akot	Somthana	Somthana	S.Somthana	1091	N 21°14.08.08	E 076°53.11.00
		5.00	0.40	2.00	MTR	Akot	Somthana	Somthana	Somthana Bu	1090	N 21°14.12.51	E 076°52.18.42
		5.00	0.40	2.00	MTR	Akot	Wan	Talai	E Talai	1121	N 21.15.38.06	E 076.48.37.14
		5.00	0.40	2.00	MTR	Akot	Wan	Talai	E Talai	1122	N 21.16.00.81	E 076.48.38.46
		11.00	0.40	4.40	MTR	Akot	Wan	Barukheda	Barukheda	1104	N 21.23.56.21	E 076.85.57.88
		1.00	0.40	0.40	MTR	Akot	Wan	Barukheda	E.Barukheda	1105	N 21.24.23.09	E 076.85.05.35
		8.00	0.40	3.20	MTR	Akot	Wan	Zari	Kahupani	1089	N 21.12.39.17	E 076.51.28.23
		100.00	**0.40**	**40.00**								
		350.00		**178.00**								
	Cement Bandhara (1 work) 8 mtr	1	15.00	15.00	MTR	Sipna	Raipur	E Retyakheda	Dolaram	264	N 21 37 52.15	E 077 18 28.00
	Cement Bandhara (4 work) 46 mtr	4	15.00	60.00	MTR	Sipna	Hatru	N Hatru	N Sumita	464, 467	N 21° 42' 55" N 21° 42' 22 N 21° 42' 4"	E 77° 20' 35" E 77° 20' 03" E 77° 20' 23"
	Cement Bandhara (5 work) 63 mtr	5	15.00	75.00	MTR	Sipna	Jarida	Jarida, Mehriam	N Barugvhan, Mehriam	402, 330	N 21 40 11 02 N 21 40 09 04 N 21 40 09 48 N 21 38 18 02 N 21 38 57 15	E 77 28 20 76 E 77 28 22 01 E 77 28 21 97 E 77 29 15 01 E 77 29 17 02
	Cement Bandhara (4 work) 44 mtr	4	15.00	60.00	MTR	Sipna	Chaurakund	Rangubeli	W/ Kutanga	577	N 21 39 30 2 N 21 38 14 8 N 21 40 13 4	E 77 08 37 7 E 77 07 13 6 E 77 06 26 83
	Sub Total	**14**		**210.00**								

.	Works proposed				Location of work						Latlong	
Rule No.	Item of work	Quantity	Rate	Amount (Rs. in Lakhs	Circle	Division	Range	Round	Beat	Compartment No	Latitude	Longitude
1	**2**	**3**	**4**	**5**	**6**	**7**	**8**	**9**	**10**	**11**	**12**	**13**
5(2)(g) ii	Construction of Cement Bandhare	4	15.00	60.00	MTR	Pandharkawada	Sondabhi	Jeoli, Sondabhi & Morchandi	Jeoli, Sondabhi & Morchandi	515, 530, 563	19°49'05.18"	78°05'58.94"
		3	15.00	45.00	MTR	Pandharkawada	Bittergaon	Kurali, Bittargaon, chikhali	Kurali, Bittargaon, chikhali	471, 491	19°33'32"	077°56'55"
	Sub Total	7		105.00								
	Total	**21**		**315**								
	Construction of Cement Bandhare (Mission Melghat)	2.00	10.00	20.00	MTR	Melghat WL Dn.	Ghatang	Ghatang	Shirajban	85	N 21 47 93.68	E 77 39 65.67
		2.00	10.00	20.00	MTR	Melghat WL Dn.	Akot	Khatkali	S.Kusumbi	962	N 21 16 35.35	E 77 07 44.21
		2.00	10.00	20.00	MTR	Melghat WL Dn.	Akot	Khatkali	S.Kusumbi	962	N 21 16 37.36	E 77 07 50.66
		2.00	10.00	20.00	MTR	Melghat WL Dn.	Akot	Khatkali	S.Kusumbi	971	N 21 16 14.83	E 77 07 09.95
		2.00	10.00	20.00	MTR	Melghat WL Dn.	Akot	Khatkali	S.Kusumbi	962	N 21 16 26.80	E 77 07 28.81
		1.00	10.00	10.00	MTR	Melghat WL Dn.	Akot	Khatkali	S.Kusumbi	962	N 21 16 25.33	E 77 07 26.50
		1.00	10.00	10.00	MTR	Melghat WL Dn.	Akot	Khatkali	S.Kusumbi	971	N 21 16 16.10	E 77 07 12.78
		2.00	10.00	20.00	MTR	Melghat WL Dn.	Dhulghat	Biroti	West Biroti	1220	N 21 17 59.63	E 76 39 18.16
		1.00	10.00	10.00	MTR	Melghat WL Dn.	Dhulghat	Dhulghat	North Anyar	1237	N 21 16 19.16	E 76 44 50.07
		15.00		**150.00**								
		3.00	10.00	30.00	MTR	Sipna	Hatru	Retyakheda	S. Retyakheda	536	N 21 37 38.32	E 077 13 30.07"
		2.00	10.00	20.00	MTR	Sipna	Hatru	Retyakheda	E. Retyakheda	505	N 21 37 '47.22"	E 077 15' 45.58"
		2.00	10.00	20.00	MTR	Sipna	Raipur	Maithanballa	N. Madizadap	271	N 21 37.007.01"	E 077 20.261".07"
		2.00	10.00	20.00	MTR	Sipna	Jarida	Khandukheda	W. Ghana	300	N 21 33.31.56"	E 077 26.12.95"
		1.00	10.00	10.00	MTR	Sipna	Jarida	Khandukheda	W. Ghana	302	N 21 34.41.5"	E 077 26.42.2"
		2.00	10.00	20.00	MTR	Sipna	Jarida	Khandukheda	W. Ghana	300	N 21 33.35.4"	E 077 26.14.1"
		2.00	10.00	20.00	MTR	Sipna	Semadoh	Talai	Kumbhikhandi	172	N 21 32.85.72"	E 077 17..69.25"
		1.00	10.00	10.00	MTR	Sipna	Chourakund	N. Chourakund	N. Chourakund	586	N 21 37.38.9"	E 077 07..28.07"
		15.00		**150.00**								

.	Works proposed				Location of work						Latlong	
Rule No.	Item of work	Quantity	Rate	Amount (Rs. in Lakhs	Circle	Division	Range	Round	Beat	Compartment No	Latitude	Longitude
1	**2**	**3**	**4**	**5**	**6**	**7**	**8**	**9**	**10**	**11**	**12**	**13**
	Construction of Cement Bandhare (Mission Melghat)	2.00	10.00	20.00	MTR	Gugamal	chikhaldara	khongda	dhundriaam	942	N21°32'45.20"	E77°13'09.92"
		2.00	10.00	20.00	MTR	Gugamal	chikhaldara	chikhaldara	memna	42	N21°25'62"	E77°19'05"
		2.00	10.00	20.00	MTR	Gugamal	chikhaldara	chikhaldara	borkhadi	122	N21°45'71.72"	E77°27'52.'81"
		2.00	10.00	20.00	MTR	Gugamal	Harisal	Mangiya	Banabhura	619	N 21 33 17.56	E 077 10 41.38
		2.00	10.00	20.00	MTR	Gugamal	Harisal	Mangiya	Khari	630	N 21 32 44.37	E 077 10 03.55
		2.00	10.00	20.00	MTR	Gugamal	Tarubanda	Rangarao	Amrai	770	N21'26'44.36"	E077'11'03.91"
		3.00	10.00	30.00	MTR	Gugamal	Dhakna	Dolar, Borikheda	Dolar Junapani	1141 736	N-21'20.'37.75" N-21'28.'03.26"	E-076'57'09.73" E-
		15.00		**150.00**								
		4.00	10.00	40.00	MTR	Akot	Sonala	Sonala	Salwan	43	N 21. 11. 938"	E 076 44 546"
		2.00	10.00	20.00	MTR	Akot	Sonala	Sonala	S.Mangeri	354	N 21. 13. 11"	E 076. 43. 18"
		2.00	10.00	20.00	MTR	Akot	Dhargad	Gurgipati	Gurgipati	913	N 21.30.36.59"	E 076.96.60.97"
		1.00	10.00	10.00	MTR	Akot	Dhargad	Gurgipati	Chikoriaam	915	N 21.19.49.40"	E 077.01.30.90"
		1.00	10.00	10.00	MTR	Akot	Dhargad	Gurgipati	Boripati	910	N 21.19.52.64"	E 077.00.51.66"
		1.00	10.00	10.00	MTR	Akot	Dhargad	Bori	Ambeda	993	N 21.31.28.43"	E 076.97.85.75"
		1.00	10.00	10.00	MTR	Akot	Dhargad	Bori	Ambeda	995	N 21.30.91.67"	E 076.96.75.65"
		1.00	10.00	10.00	MTR	Akot	Dhargad	Bori	Ambeda	994	N 21.17.41.24"	E 077.00.40.20"
		1.00	10.00	10.00	MTR	Akot	Dhargad	Dhargad	Chiladhari	1012	N 21.16.59.50"	E 077.00.41.39"
		1.00	10.00	10.00	MTR	Akot	Dhargad	Gurgipati	Chikoriaam	912	N 21.20.6.73"	E 077.02.53.51"
		15.00		**150.00**	**MTR**	**Akot**						
		60.00		**600.00**								
	Construction of SMC work Vantalav	1	3.00	3.00	MTR	Akola	Akola	Vanoja	Fetra	-	*77*º09.*32.10*	20º25.01.16
		2	3.00	6.00	MTR	Akola	Akola	Vanoja	Kasmar	-	*77*º10.*12.60*	20º26.18.40
		1	3.00	3.00	MTR	Akola	Akola	Vanoja	Yedshi	-	*77*º12.*14.95*	20º23.30.44
		1	3.00	3.00	MTR	Akola	Akola	Vanoja	Pimplsenda	-	*77*º10.*51.93*	20º22.44.70
		1	3.00	3.00	MTR	Akola	Akola	Vanoja	Vanoja	-	*77*º12.*13.53*	20º23.13.30
		1	3.00	3.00	MTR	Akola	Akola	Somthana	Girda	-	*77*º30.*57.70*	20º26.36.50
		2	3.00	6.00	MTR	Akola	Akola	Somthana	Somthana	-	*77*º33.*21.45*	20º25.53.95
	Sub Total	**9**		**27.00**								

.	Works proposed				Location of work						Latlong	
Rule No.	Item of work	Quantity	Rate	Amount (Rs. in Lakhs	Circle	Division	Range	Round	Beat	Compartment No	Latitude	Longitude
1	**2**	**3**	**4**	**5**	**6**	**7**	**8**	**9**	**10**	**11**	**12**	**13**
iv	Creation of Vantalav	4	3.00	12.00	MTR	Pandharkawada	Sondabhi	Jeoli, Sondabhi & Morchandi	Jeoli, Sondabhi & Morchandi	575, 582	19°48'07.56"	78°57'33.7"
		6	3.00	18.00	MTR	Pandharkawada	Bittergaon	Kurali, Bittargaon, chikhali	Kurali, Bittargaon, chikhali	515, 530, 563	19°33'32"	077°56'55"
		8	3.00	24.00	MTR	Pandharkawada	Kharbi	Bori, Gadi	Bori, Gadi	471, 491	19°39'51"	077°53'10"
	Sub Total	**18**		**54.00**								
	Total Vantalav	**27**		**81.00**								
	Matinala Bandh-	1	3.00	3.00	MTR	Akola	Akola	Somthana	Girda	C 123,	*77º32.11.70*	20º27.13.20
		1	3.00	3.00	MTR	Akola	Akola	Vanoja	Fetra	124	*77º09.02.40*	20º24.07.70
	Total	**2.00**		**6.00**								
vi	Earthan/Mati Nala Bumds	4	3.00	12.00	MTR	Pandharkawada	Sondabhi	Jeoli, Sondabhi & Morchandi	Jeoli, Sondabhi & Morchandi	515, 530, 563	19°48'07.56"	78°57'33.7"
		3	3.00	9.00	MTR	Pandharkawada	Bittergaon	Kurali, Bittargaon, chikhali	Kurali, Bittargaon, chikhali	471, 491	19°33'32"	077°56'55"
	Sub Total	**7.00**		**21.00**								
	Total Earthan/Mati Nala Bumds	**9.00**		**27.00**								
	Construction of LBS Structure (Mission Melghat)	50.00	0.18	9.00	MTR	Melghat WL Dn.	Ghatang	Bhawai	East Taora	198	***N 21 30 13.14***	E 77 23 25.75
		20.00	0.18	3.60	MTR	Melghat WL Dn.	Ghatang	Bhawai	East Taora	77	N 21 30 09.77	E 77 24 43.13
		10.00	0.18	1.80	MTR	Melghat WL Dn.	Akot	Popatkhed	Popatkhed	1019	N 21 14 30.71	E 77 4 45.26
		6.00	0.18	1.08	MTR	Melghat WL Dn.	Akot	Popatkhed	Malkapur	984	N 21 15 10.66	E 77 2 39.68
		8.00	0.18	1.44	MTR	Melghat WL Dn.	Akot	Popatkhed	North Khatkali	970	N 21 16 59.97	E 77 05 14.45
		2.00	0.18	0.36	MTR	Melghat WL Dn.	Akot	Popatkhed	North Khatkali	968	N 21 16 54.50	E 77 05 0.61
		4.00	0.18	0.72	MTR	Melghat WL Dn.	Akot	Popatkhed	South Khatkali	977	N 21 16 20.68	E 77 4 51.87
		100.00		**18.00**								
		25.00	0.18	4.50	MTR	Gugamal	chikhaldara	chikhaldara	borkhadi	12,21,15,114	N 21 45 58 63	E77°27' 36. 98
		30.00	0.18	5.40	MTR	Gugamal	Tarubanda	Kund	Kund	140	N21'26'13.60"	E077'22'12.13"
		25.00	0.18	4.50	MTR	Gugamal	Tarubanda	Rangrao	Amrai	770	N21'26'30.00"	E077'08'07.00"
		20.00	0.18	3.60	MTR	Gugamal	Dhakna	Dolar	Dolar	1,142	N-21'20.'33.22"	E-076'57'12.81"
		100.00		**18.00**								

.	Works proposed				Location of work						Latlong	
Rule No.	Item of work	Quantity	Rate	Amount (Rs. in Lakhs	Circle	Division	Range	Round	Beat	Compartment No	Latitude	Longitude
1	**2**	**3**	**4**	**5**	**6**	**7**	**8**	**9**	**10**	**11**	**12**	**13**
	Construction of LBS Structure (Mission Melghat)	20.00	0.18	3.60	MTR	Akot	Somthana	Borwa	E.Borwa	1094	N 21°992"	E 76°54'509"
		15.00	0.18	2.70	MTR	Akot	Wan	Talai	E.Talai	1121	N 21.16.03.92"	E 076.48.41.15"
		10.00	0.18	1.80	MTR	Akot	Wan	Talai	E.Talai	1122	N 21.16.05.35"	E 076.48.45.04"
		15.00	0.18	2.70	MTR	Akot	Wan	Barukheda	Barukheda	1104	N 21.24.25.17"	E 076.85.05.2"
		25.00	0.18	4.50	MTR	Akot	Wan	Barukheda	Barukheda	1108	N 21.14.41.71"	E 076.51.14.35"
		15.00	0.18	2.70	MTR	Akot	Wan	Zari	Kahupani	1089	N 21.12.57.23"	E 076.31.19.73"
		100.00		**18.00**								
		300.00		**54.00**								
	Total of 5(2)(g)	**867.00**		**1305.00**								
5(2)(i)	**Improvement of wildlife habitat as provided in the approved wildlife management plan or working plan**											
ii	**Meadow development**											
ii	Meadow Development	55	0.05	2.75	MTR	Melghat WL Dn.	Jamli	Khongda	Khongda	950	N 21 18 73.0	E 77 11 85.8
ii	Meadow Development				MTR	Melghat WL Dn.	Akot	Dhondaakhar	Borwa	1,083	N 21 12 30	E 76 53 30
ii	Meadow Development				MTR	Melghat WL Dn.	Ghatang	Masondi	S.Masondi	51	N 21 26 91.3	E 77 22 28.1
	Total	**55.00**		**2.75**								
	Meadow development (5 work site) SYO	70	0.04	3.14	MTR	Sipna	Semadoh	Pili	Pili	119	N 21 29 33 N 21 29 21 N 21 29 32 N 21 29 35 N 21 29 35	E 077 16 17 E 077 15 56 E 077 14 15 E 077 16 10 E 077
	Meadow development (1 work site) FYO	10	0.20	2.03	MTR	Sipna	Raipur	N Raipur	W Raipur	252	N 21 35 30.52	E 77 13 58.35
	Meadow development (1 work site) FYO	5	0.20	1.02	MTR	Sipna	Hatru	N Hatru	S Sumita	470	N 21 42 12.85	E 077 18 02.53
	Meadow development (4 work site) TYO	40	0.04	1.80	MTR	Sipna	Chaurakund	Tapi, Dhokda	Chopan, Dhokda, W. Chopan	583, 562, 580, 580	N 21 60 83.02 N 21 69 97.46 N 21 65 69.55 N 21 65 71.26	E 077 15 71.8 E 077 17 06.67 E 077 15 15.9 E 077 14 88.12
	Meadow development 1 work (Seed Plot) (2 works Site)	4	7.13	28.54	MTR	Sipna	Semadoh	Pili	Pili	119	N 21 29 21 N 21 29 35	E 077 15 56 E 077 16 10
	Total	**129.00**		**36.53**								
	Old Meadow (outside of meadow development) fire line meadow maintenance											
	Harisal Range (Ha)	10	1.50	1.50	MTR	Gugamal	Harisal	S.Chourkund	Potilawa	652	N-21'53'39.65"	E-077'11'33.58
	Harisal Range (Ha)	20	3.00	3.00	MTR	Gugamal	Harisal	S.Chourkund	Tangda	659	N-21'59'46.65"	E-077'08'58.42
	Harisal Range (Ha)	30	4.50	4.50	MTR	Gugamal	Harisal	Harisal	Shevarimunda	637	N-21'33'17.01"	E-077'06'50.01

.	Works proposed				Location of work						Latlong	
Rule No.	Item of work	Quantity	Rate	Amount (Rs. in Lakhs	Circle	Division	Range	Round	Beat	Compartment No	Latitude	Longitude
1	**2**	**3**	**4**	**5**	**6**	**7**	**8**	**9**	**10**	**11**	**12**	**13**
	Chikhaldara Range (Ha)	17	1.63	1.63	MTR	Gugamal	Chikhaldra	Vairat	Vairat	783	N-21'25'40"	E-077'14'42
	Chikhaldara Range (Ha)	5	0.48	0.48	MTR	Gugamal	Chikhaldra	Chikhaldra	Churni	110	N-21'25'28.58"	E-077'15'44.25
5(2)(i)	Chikhaldara Range (Ha)	28	2.68	2.68	MTR	Gugamal	Chikhaldra	Chikhaldra	Mamana	41	N-21'25'28.58"	E-077'15'44.24
	Fooder Development Kuran Vikas	5	29.50	29.50	MTR	Gugamal	Chikhaldra	Chikhaldra	Mamana	41	N-21'25'28.58"	E-077'15'44.24
	Tarubanda Range (Ha)	100	7.00	7.00	MTR	Gugamal	-	-	-	-	-	-
		215.00		**50.29**								
ii	**improvement of wildlife habitat development (collection of seed, weed removal, fire line, meadow maintenance)**											
	Seed plot preparation	1	9.78	9.775	MTR	Akot	Somthana	Somthana	Somthana	1095	21:15:12.04"	76:53:56.7"
	Seed plot preparation	1	9.78	9.775	MTR	Akot	Wan	Talai	Talai	1243	21:15:4"	76:48:26"
	Seed plot preparation	1	9.78	9.775	MTR	Akot	Sonala	Ambabrwa	Chunkhadi	359	21:15'39.06"	076:40'29.9"
	Seed plot preparation	1	9.78	9.775	MTR	Akot	Sonala	Sonala	Rohinkhidki	47	21:11'6.69"	076:44'8.32"
	Sub Total	**4**		**39.10**								
	Meadow development	50	LS	20.00	MTR	Akola	Akola	Somthana	-	-	77º58.07.55	20º42.61.11
	Total	**50.00**		**20.00**								
ii	Fodder Development (TYO Works) Medow Devolapment	150	0.04	6.13	MTR	Pandharkawada	Patanbori	Sunna	Kopamandvi, Maregaon	1,02,110	19°89'78.93"N	78° 45'57.58"E
		100	0.04	4.08	MTR	Pandharkawada	Parwa	Mathani	Both	medow	19°54'98.00"N	78° 30'90.00"E
		12.5	0.04	0.51	MTR	Pandharkawada	Kharbi	Kharbi	Wadgaon	606	19°33'50"N	78° 10'51"E
		12.5	0.04	0.51	MTR	Pandharkawada	Korata.	Waltur	Waltur	549	19°39'51"N	78° 2'59"E
		12.5	0.04	0.51	MTR	Pandharkawada	Sondabhi	Jevali	Murali	620	19°37'29"N	77° 54'15"E
		12.5	0.04	0.51	MTR	Pandharkawada	Bittergaon	Chickli	Kurali	486	19°49'07.23"N	77° 99'06.45"E
	Total Fodder Development (TYO Works)	**300**		**12.25**								
ii	Medow Devolapment Fodder Development (FYO Works)	75	0.08	6.00	MTR	Pandharkawada	Patanbori	Sunna	Sunna, Maregaon	111,Medow	19°54'78.13"	78° 29'24.36"
		70	0.08	5.60	MTR	Pandharkawada	Parwa	mathani, Swaragaon	Both, Bhadumari	Tip Medow, 139	19°55'74.5"	78°23'43.8"
		145.00		**11.60**								

.	Works proposed				Location of work						Latlong	
Rule No.	Item of work	Quantity	Rate	Amount (Rs. in Lakhs	Circle	Division	Range	Round	Beat	Compartment No	Latitude	Longitude
1	**2**	**3**	**4**	**5**	**6**	**7**	**8**	**9**	**10**	**11**	**12**	**13**
	Sub Total	**898.00**		**172.52**								
iii	**Creation & maintenance of water sources/ water holes for wildlife**											
	Borewell	15	0.95	14.25	MTR	Melghat WL Dn.	-	-	-	-		
	Deeping and Desiltation of Waterholes, Bandharas and anicuts.	45	0.16	7.20	MTR	Melghat WL Dn.	-	-	-	-		
		60.00		**21.45**								
	Creation of artificial water hole	25	0.16	4.10	MTR	Sipna	-	-	-	-	N 21 30 38.45 N 21 29 45.70 N 21 27 35.48 N 21 28 55.45 N 21 30 22.45	E 077 16 15.88 E 077 15 56.10 E 077 18 16.45 E 077 18 57.45 E 077 12 17.25
	Maintencnce of Water Hole	375	0.02	5.63	MTR	Sipna	-	0	-	-	N 21 34 32.62 N 21 37 23.75 N 21 38 14.35 N 21 38 49.26 N 21 39 39.14	E 077 14 35.64 E 077 18 3.15 E 077 18 21.55 E 077 17 31.87 E 077 16 58.36
	Deeping and Desitation of Natural waterholes, Bandharas and anicuts	3	0.25	0.75	MTR	Sipna	Jarida	Jarida	N Barugvhan	402	N 21 40 08.93	E 077 28 48.54
	Deeping and Desitation of Natural waterholes, Bandharas and anicuts	5	0.25	1.25	MTR	Sipna	Raipur	Maythanballa E Retyakheda	Maythanballa S Kuhi	499 507 508	N 21 35 15.32 N 21 38 40.07 N 21 39 80.03 N 21 21 34.80 N 21 39 16.30	E 077 20 19.55 E 077 17 27.12 E 077 17 39.05 E 077 15 15.90 E 077 17 51.21
	5 HP Solar Pump	6	3.15	18.90	MTR	Sipna	Semadoh	Javaharkund Kolkas Talai Pili Semadoh	S Semadoh N Pili Kolkas Kumbhikhandi Pili Chunaghani	107 154 150 224 119 118	N 21 27 15 N 21 30 82 N 21 32 57 N 21 29 17 N 21 28 06	E 077 18 15 E 077 13 49 E 077 12 51 E 077 17 47 E 077 15 50
	5 HP Solar Pump	2	3.15	6.30	MTR	Sipna	Hatru	Retyakheda E Bhutrum	E Retyakheda E Bhutrum	505 526	N 21 38 16.6 N 21 42 02.06	E 077 15 33.8 E 077 14 95.07
	2 HP Solar Pump	2	1.58	3.16	MTR	Sipna	Chaurakund	Dhokda Rangubeli	W Rangubeli W Kutanga	565 577	N 21 69 95.15 N 21 39 59.89	E 077 12 16.92 E 077 06 39.77
	1 HP Solar Pump	1	1.58	1.58	MTR	Sipna	Jarida	Mehriam	E Marita	328	N 21 38 36.07	E 077 25 37.07
	2 HP Solar Pump	5	1.58	7.90	MTR	Sipna	Raipur	W Chunkhadi N Raipur E Retyakheda S Raipur	Kumbhikuva E Raipur Boratyaheda Dolaram Daitkahu	220 266 256 264 233	N 21 35 6 N 21 36 34 N 21 36 57 N 21 38 34 N 21 34 5.09 N 21 37 20.67 N 21 39 15.52 N 21 32 17.49	E 077 18 35 E 077 17.56 E 077 15.38 E 077 18.20 E 077 13 22.87 E077 19 36.16 E 077 17 50.74 E 077 16 04.17
	Borewell with soler system along with 3 water hole	1	3.15	3.15	MTR	Sipna	Jarida	Khandukheda	W Ghana	300	N 21 33 23.06	E 077 26.23.13

.	Works proposed				Location of work						Latlong	
Rule No.	Item of work	Quantity	Rate	Amount (Rs. in Lakhs	Circle	Division	Range	Round	Beat	Compartment No	Latitude	Longitude
1	**2**	**3**	**4**	**5**	**6**	**7**	**8**	**9**	**10**	**11**	**12**	**13**
5(2)(i)	Borewell with soler system along with 3 water hole	2	3.15	6.30	MTR	Sipna	Raipur	W Chunkhadi	Beladoh Kunbhikuva	222 220	N 21 34 54.42	E 077 19 48.23
	Borewell with soler system along with 3 water hole	3	3.15	9.45	MTR	Sipna	Hatru	S Hatru E Bhutrum	Chilati S Sumita Ruipathar	474 460 523	N 21 43 50.00 N 21 42 18.20	E 077 18 51.00 E 077 16 45.71
	Deeping and Desitation of Natural waterholes, Bandharas and anicuts	5	0.25	1.25	MTR	Sipna	Hatru	Sipna Patel	S Hatru	489 488 492 485	N 21 38.24 N 21 66 05.25 N 21 38.49 N 21 39.514	E 077 19.44 E 077 33 68.4 E 077 19.44 E 077 22.425
	Repairing of Handpump	3	0.15	0.45	MTR	Sipna	Jarida	Jarida, Mehriam	N Barugvhan, E Marita	402, 329	N 21 40 03.81 N 21 39 27	E 077 28 47.59 E 077 26.54
	Repairing of Handpump	4	0.15	0.60	MTR	Sipna	Hatru	S Hatru W Bhutrum N Hatru E Bhutrum	E Hatru S Bhutrum W Sumita E Bhutrum	461 462 475 458 526	N 21 41 8 N 21 43 06.23 N 21 43 28.00 N 21 42 02.34	E 077 20 8 E 077 20 04.61 E 077 19 36.00 E 077 14 58.77
	Total	**442.00**		**70.77**								
iii	Eco- Frindly Water Hole Near Karmoda Pro.Camp	1	0.17	0.17	MTR	Akot	Sonala	Sonbardi	Karmoda	364	21.15.'45.44"	076:62'04.74"
	Eco- Frindly Water Hole Near Karmoda Pro.Camp	1	0.17	0.17	MTR	Akot	Sonala	Sonbardi	Karmoda	364	21.15.'62.49"	076:62'17.52"
	Eco- Frindly Water Hole Near Karmoda Pro.Camp	1	0.17	0.17	MTR	Akot	Sonala	Sonbardi	Karmoda	364	21.15.'48.38"	076:62'40.96"
	Eco- Frindly Water Hole Near Borakhandi	1	0.17	0.17	MTR	Akot	Sonala	Saykhed	N.Saykhed	355	21.11.01'38"	076:44'37.89"
	Eco- Frindly Water Hole Near Borakhandi	1	0.17	0.17	MTR	Akot	Sonala	Warwat	N.Saykhed	355	21.11.03'29"	076:42'30.24"
	Eco- Frindly Water Hole Near Borakhandi	1	0.17	0.17	MTR	Akot	Sonala	Warwat	N.Saykhed	355	21.10.55'54"	076:42'27.48"
	Eco- Frindly Water Hole Near Sagmalli	1	0.17	0.17	MTR	Akot	Sonala	Warwat	S.Aalewadi	357	21.10.'989"	076:40'494"
	Eco- Frindly Water Hole Near Sagmalli	1	0.17	0.17	MTR	Akot	Sonala	Warwat	S.Aalewadi	357	21.11.'012"	076:40'592"
5(2)(i)	Eco- Frindly Water Hole Near Sagmalli	1	0.17	0.17	MTR	Akot	Sonala	Warwat	S.Aalewadi	357	21.11.'110"	076:40'772"
	Eco- Frindly Water Hole Near Aampani Maidan	1	0.17	0.17	MTR	Akot	Sonala	Warwat	S.Aalewadi	357	21.11.'277"	076:41'089"
	Eco- Frindly Water Hole Near Aampani Maidan	1	0.17	0.17	MTR	Akot	Sonala	Warwat	S.Aalewadi	357	21.11.'397"	076:41'025"
	Eco- Frindly Water Hole Near Aampani Maidan	1	0.17	0.17	MTR	Akot	Sonala	Warwat	S.Aalewadi	357	21.10.'551"	076:40'265"
	Eco- Frindly Water Hole Near Garampani Pro.Camp	1	0.17	0.17	MTR	Akot	Sonala	Warwat	S.Saykhed	356	21.10.'14"	076:41'43"
	Eco- Frindly Water Hole Near Garampani Pro.Camp	1	0.17	0.17	MTR	Akot	Sonala	Warwat	S.Saykhed	356	21.17.'40"	076:41'36"
	Eco- Frindly Water Hole Near Garampani Pro.Camp	1	0.17	0.17	MTR	Akot	Sonala	Warwat	S.Saykhed	356	21.17.'34"	076:41'85"
iii	Dilling Borewell and Solar Submarsible Water Pump 2 HP Near Karmoda Pro.Camp	1	3.28	3.28	MTR	Akot	Sonala	Sonbardi	Karmoda	364	N 21.15.'45.44"	E 076:62'04.74"

.	Works proposed				Location of work						Latlong	
Rule No.	Item of work	Quantity	Rate	Amount (Rs. in Lakhs	Circle	Division	Range	Round	Beat	Compartment No	Latitude	Longitude
1	**2**	**3**	**4**	**5**	**6**	**7**	**8**	**9**	**10**	**11**	**12**	**13**
	Dilling Borewell and Solar Submarsible Water Pump 2 HP Near Borakhandi	1	3.28	3.28	MTR	Akot	Sonala	Warwat	N.Saykhed	355	N 21.11.01'38"	E 076:44'37.89"
	Dilling Borewell and Solar Submarsible Water Pump 2 HP Near Sagmalli	1	3.28	3.28	MTR	Akot	Sonala	Warwat	S.Aalewadi	357	N 21.10.'989"	E 076:40'494"
	Dilling Borewell and Solar Submarsible Water Pump 2 HP Near Aampani Maidan	1	3.28	3.28	MTR	Akot	Sonala	Warwat	S.Aalewadi	357	N 21.10.'989"	E 076:40'494"
	Dilling Borewell and Solar Submarsible Water Pump 2 HP Near Garampani Pro.Camp	1	3.28	3.28	MTR	Akot	Sonala	Warwat	S.Saykhed	356	N 21.10.'14"	E 076:41'43"
	Sub Total	**20**		**18.95**								
	Creation of artificial water hole	10	0.3	3.00	MTR	Akola	Akola	-	-	-		
	Maintencnce of Water Hole	50	0.02	1.00	MTR	Akola	Akola	-	-	-		
		60		**4.00**								
	Total of 5(2)(i)	**582.00**		**115.17**								
	Creation & maintenance of water sources/water holes for wildlife (Mission Melghat)			2.00	MTR	Melghat WL Dn.	Akot	Popatkhed	Malkapur	1018	N 21 07 35.72	E 77 11 77.74
				2.00	MTR	Melghat WL Dn.	Akot	Popatkhed	S.Khatkali	975	N 21 15 20.40	E 77 04 0.20
				2.00	MTR	Melghat WL Dn.	Akot	Khatkali	N.Kusumbi	937	N 21 30 56.03	E 77 10 06.42
				2.00	MTR	Melghat WL Dn.	Ghatang	Masondi	S.Masondi	51	N 21 44 87.38	E 77 36 88.36
				2.00	MTR	Melghat WL Dn.	Ghatang	Bhawai	E.Semadoh	84	N 21 29 39.00	E 77 23 0.00
				2.00	MTR	Melghat WL Dn.	Ghatang	Makhala	Taora	202	N 21 53 69.02	E 77 40 47.59
				2.00	MTR	Melghat WL Dn.	Akot	Khatkali	S.Kusumbi	962	N 21 16 26.20	E 77 07 32.59
				2.00	MTR	Melghat WL Dn.	Akot	Popatkhed	Malkapur	1018	N 21 13 17.61	E 77 04 06.81
				2.00	MTR	Melghat WL Dn.	Akot	Khatkali	S.Kusumbi	962/957	N 21 17 00.57	E 77 08 43.50
				2.00	MTR	Melghat WL Dn.	Akot	Khatkali	Zira	956	N 21 16 59.43	E 77 08 41.56
				20.00								
				0.30	MTR	Sipna	Hatru	Sipna Patel	S. Hatru	489	N21.38 24"	E 077:19'42"
				0.30	MTR	Sipna	Hatru	N Hatru	N sumita	461	N21 43 06.23	E077 20 04.61
				0.30	MTR	Sipna	Hatru	N Hatru	N sumita	462	N21 43 28.00	E077 19 36.00
				0.30	MTR	Sipna	Hatru	Retyakheda	Retyakheda	542	N21 38 20.25	E077 13 50.05
				0.30	MTR	Sipna	Hatru	Retyakheda	S Retyakheda	539	N21 37 32.25	E077 13 56.00
				0.30	MTR	Sipna	Hatru	Sipna Patel	S Hatru	490	N 21 38 30.1	E077 20 02.3

.	Works proposed				Location of work						Latlong	
Rule No.	Item of work	Quantity	Rate	Amount (Rs. in Lakhs	Circle	Division	Range	Round	Beat	Compartment No	Latitude	Longitude
1	**2**	**3**	**4**	**5**	**6**	**7**	**8**	**9**	**10**	**11**	**12**	**13**
	Creation & maintenance of water sources/water holes for wildlife (Mission Melghat)			0.30	MTR	Sipna	Hatru	Sipna Patel	S Hatru	489	N21 38 61.5	E077 19 73.2
				0.30	MTR	Sipna	Hatru	Sipna Patel	S Hatru	490	N21 39 04.5	E077 20 48.3
				0.30	MTR	Sipna	Hatru	N hatru	N sumita	461	N21 43 06.23	E077 20 04.60
				0.30	MTR	Sipna	Hatru	N hatru	N sumita	462	N21 41 09.18	E077 20 06.75
				0.30	MTR	Sipna	Hatru	N hatru	W sumita	458	N21 43 20.9	E077 17 50.6
				0.60	MTR	Sipna	Hatru	Retyakheda	E. Retyakheda	505	N21 35' 15.91"	E077 15 33.42
				0.30	MTR	Sipna	Hatru	Retyakheda	Retyakheda	535	N21 38' 10.17"	E077 15' 00.61"
				0.30	MTR	Sipna	Hatru	Retyakheda	S. Retyakheda	536	N21 38' 10.17"	E077 14' 54.64"
				0.30	MTR	Sipna	Hatru	Retyakheda	S. Retyakheda	539	N21 37' 43.31"	E077 13' 36.43"
				0.30	MTR	Sipna	Chourakund	N Chourakund	N Chourakund	588	N21 38 21.2	E077 07 12.8
				0.30	MTR	Sipna	Chourakund	N.Anjamzarap	N.Malur	586	N21 38 12.9	E077 08 00.6
				0.30	MTR	Sipna	Chourakund	N Chourakund	N Tangda	362	N 21°36'50.50"	E 77° 5'41.47"
				2.10	MTR	Sipna	Semadoh	Pili	Pili	119	21°29'14.17"N	77°15'30.10"E
				0.60	MTR	Sipna	Semadoh	Semadoh	Chunaghani	118	21°29'29.12"N	77°16'8.95"E
				0.30	MTR	Sipna	Semadoh	Pili	Pili	119	21°29'42.23"N	77°15'24.07"E
				0.30	MTR	Sipna	Semadoh	Dundam	Kolkas	150	N२१ ५२ ४३.९१	E ०७७ २१ ४१.७१
				0.30	MTR	Sipna	Semadoh	Kinhibhuru	Kolkas	155	N२१ ५१ ५९.४८	E०७७ २३ ५४.१६
				0.30	MTR	Sipna	Semadoh	Gadapata	jawaharkund	107	N २१ २७ २५.२३	E०७७ १८ ३५.७६
				0.30	MTR	Sipna	Semadoh पर्यटन क्षेत्र सोलार पंप क्रमांक ३	Kuvapati	Kuvapati	161	N२१ ३० ५३.९४	E ०७७ १६ ०४.१९
				2.6	MTR	Sipna	Hatru (Solarpump + Borewell)	Sipna Patel	S. Hatru	489	N21.38 24"	E 077:19'42"
				2.5	MTR	Sipna	Jarida (Solarpup + Borewell)	Jarida	S madizadap	212	N 21 35 51	E 77 22 4
				2.5	MTR	Sipna	Jarida (Solarpup + Borewell)	Khandukheda	W Ghana	300	N 21 33 21.54	E 77 26 20.55
				2.5	MTR	Sipna	Hatru(Solarpump + Borewell)	Retyakheda	Retyakheda	542	N21 38 20.25	E077 13 50.05
				20.00								

.	Works proposed				Location of work						Latlong	
Rule No.	Item of work	Quantity	Rate	Amount (Rs. in Lakhs	Circle	Division	Range	Round	Beat	Compartment No	Latitude	Longitude
1	**2**	**3**	**4**	**5**	**6**	**7**	**8**	**9**	**10**	**11**	**12**	**13**
	Creation & maintenance of water sources/water holes for wildlife (Mission Melghat)			5.00	MTR	Gugamal	Tarubanda	Adhao	Koha	829	N-21'25'13.80"	E-077'05'79.5
				5.00	MTR	Gugamal	Harisal	S. Anjanzadap	Jambukuaa	623	N-21'52 42.04	E-077'18 78.58
				5.00	MTR	Gugamal	Chikhaldara	Vairat	Vairat, Pachamba, Jamali	789, 788, 787,	N 21 22 15	E077 14 59
				5.00	MTR	Gugamal	Chikhaldara	Chikhaldara	Memna Churani	41, 42, 36, 37 38,	N 21 40 24 29	E077 27 28 57.87
				20.00								
				1.70	MTR	Akot	Somthana	Amona	E.Dhargad	1072	N 21°15.58.93	E 076°58.22.99
				0.58	MTR	Akot	Wan	Barukheda	Kanjoli	1132	N 21°18.24.48	E 076°50.41.06
				0.58	MTR	Akot	Wan	Barukheda	Kanjoli	1131	N 21°16.17.68	E 076°49.58.50
				4.06	MTR	Akot	Wan	Barukheda	Barukheda	1104	N 21°13.462	E 076°49.57.05
				3.48	MTR	Akot	Wan	Barukheda	E.Barukheda	1108	N 21°14.11.73	E 076°51.50.59
				0.28	MTR	Akot	Sonala	Sonala	Rohinkhidki	37	N 21°12.26.18	E 076°43.52.79
				0.28	MTR	Akot	Sonala	Sonala	Rohinkhidki	38	N 21°12.22.04	E 076°43.59.44
				0.84	MTR	Akot	Sonala	Wasali	Ambabrwa	360	N 21°23.07	E 076°64.90
				1.40	MTR	Akot	Sonala	Wasali	Chunkhadi	359	N 21°14.25.07	E 076°40.5.0
				1.64	MTR	Akot	Sonala	Wasali	E.Wasali	361	N 21°10.15.10	E 076°39.23.17
				0.28	MTR	Akot	Sonala	Warwat	S.Aalewadi	357	N 21°09.8	E 076°42.37
				0.84	MTR	Akot	Sonala	Wasali	W.Wasali	362	N 21°10.51.71	E 076°39.07.34
				0.58	MTR	Akot	Narnala	Bordi	Bordi	168	N 21°13.0.11	E 077°01.747
				1.16	MTR	Akot	Narnala	Bordi	Bordi	167	N 21°12.727	E 077°01.424
				0.28	MTR	Akot	Narnala	Bordi	Shahanur	166	N 21°14.29.1	E 077°02.07.2
				0.58	MTR	Akot	Narnala	Bordi	Shahanur	165	N 21°14.0.05	E 077°01.8.1
				0.58	MTR	Akot	Narnala	Bordi	Shahanur	164	N 21°13.52.4	E 077°02.24.2
				0.28	MTR	Akot	Narnala	Bordi	Shahanur	163	N 21°13.41.3	E 077°02.42.9
				0.58	MTR	Akot	Narnala	Bordi	S.Shahanur	170	N 21°20.93.63	E 077°00.81.17
				20.00								
		0.00		**80.00**								

.	Works proposed				Location of work						Latlong	
Rule No.	Item of work	Quantity	Rate	Amount (Rs. in Lakhs	Circle	Division	Range	Round	Beat	Compartment No	Latitude	Longitude
1	**2**	**3**	**4**	**5**	**6**	**7**	**8**	**9**	**10**	**11**	**12**	**13**
iv	**Eradication of invasive speccies**											
	Lantana Removal (12 work site)	450	0.08	36.31	MTR	Sipna	Raipur	N Raipur W Chunkhadi Bodpadav S Raipur	Raipur Boratyakheda W Raipur E Raipur, S Raipur, E Bod Daityakahu N Kuvapati Beladoh	259 257 249 266 267 230 254 237 231 227 261 229	N 21 35 18.24 N 21 36 47.12 N 21 36 39.17 N 21 36 18.47 N 21 35 30.03 N 21 35 33.91 N 21 34 21.99 N 21 34 33.6 N 21 34 27.84 N 21 33 18.82 N 21 35 47.15 N 21 34 48.12	E 077 15 28.3 E 077 15 21.05 E 077 12 55.48 E 077 18 40.21 E 077 18 15.27 E 077 15 45.25 E 077 15 13.65 E 077 15 20.2 E 077 16 14.09 E 077 17 14.06 E 077 17 15.17 E 077 17 28.41
5(2)(i) iv	Lantana Removal (8 work site)	190	0.08	15.33	MTR	Sipna	Jarida	Chunkhadi Khadimal Mehriam jarida Khandukheda	N Chunkhadi E Chunkhadi Avagad Mehriam N Barugvhan W Ghana	286 285 209 314 331 324 402	N 21 36 52.6 N 21 36 46.22 N 21 35 00.27 N 21 36 15.96 N 21 38 07.04 N 21 38 04.18 N 21 38 11.9 N 21 33 41.00	E 077 23 51.63 E 077 24 30.52 E 077 22 52.09 E 077 28 08.39 E 077 27 33.00 E 077 25 26.86 E 077 29 77.01 E 077 26 08.46
	Lantana Removal (5 work site)	90	0.08	7.26	MTR	Sipna	Hatru	Retyakheda E Bhutrum W Bhutrum	E Retyakheda E Bhutrum N Retyakheda S Bhutrum	533 534 532 525 530 547	N 21 38 55 N 21 39 207 N 21 42 07.63 N 21 40 114 N 21 40 56.71	E 077 15 54 E 077 14 395 E 077 15 36.71 E 077 13 951 E 077 13 45.10
	Lantana Removal (13 work site)	547	0.08	44.14	MTR	Sipna	Chaurakund	N Anjanzadap N Chaurakund Tapi Khamda S Tapi Dhokda	E Chaurakund Chaurakund N Tangada W Chopan N Malur Khokmar Chopan Dhokda S Rangubeli Khamda S Kund	594 591 588 660 580 600 551 582 583 604 562 564 567 574 560	21°39'46.7"N 21°39'49.3"N 21°36'21.6"N 21°37'22.1"N 21°37'25.7"N 21°41'52.3"N 21°38'52.0"N 21°38'42.1"N 21°38'16.9"N N21 42 52.18 N21 39 59.65 N21 42 51.72 N21 39 08.01 N21 41 53.99 N21 37 54.08	77°12'06.5"E 77°12'04.6"E 77°05'13.4"E 77°07'29.5"E 77°07'18.4"E 77°08'23.3"E 77°10'37.2"E 77°10'12.9"E 77°10'40.1"E E77 06 14.39 E77 08 40.46 E77 11 02.95 E77 06 14.39 E77 09 16.26 E77 09 09.26
	Lantana Removal (5 work site)	200	0.08	16.14	MTR	Sipna	Semadoh	Semadoh Pili Makhala	Aseri Pili Semadoh Haldukheda Chunadhani	169 176, 119 121, 178 179, 105 106, 116 117	N 21 29 35 N 21 30 11 N 21 32 42 N 21 29 53 N 21 27 15	E 077 16 02 E 077 19 11 E 077 16 40 E 077 18 53 E 077 18 15
	Total	**1477.00**		**119.18**								

.	Works proposed				Location of work						Latlong	
Rule No.	Item of work	Quantity	Rate	Amount (Rs. in Lakhs	Circle	Division	Range	Round	Beat	Compartment No	Latitude	Longitude
1	**2**	**3**	**4**	**5**	**6**	**7**	**8**	**9**	**10**	**11**	**12**	**13**
	Collection of seed weed removal											
	Harisal Range (Ha)	10	1.50	1.50	MTR	Gugamal	Harisal	S.Chourkund	Potilawa	652	N-21'53'39.65"	E-077'11'33.58
	Harisal Range (Ha)	20	3.00	3.00	MTR	Gugamal	Harisal	S.Chourkund	Tangda	659	N-21'59'46.65"	E-077'08'58.42
	Harisal Range (Ha)	30	4.50	4.50	MTR	Gugamal	Harisal	Harisal	Shevarimunda	637	N-21'33'17.01"	E-077'06'50.01
	Chikhaldara Range (Ha)	17	1.63	1.63	MTR	Gugamal	Chikhaldra	Vairat	Vairat	783	N-21'25'40"	E-077'14'42
	Chikhaldara Range (Ha)	5	0.48	0.48	MTR	Gugamal	Chikhaldra	Chikhaldra	Churni	110	N-21'25'28.58"	E-077'15'44.25
5(2)(i)	Chikhaldara Range (Ha)	28	2.68	2.68	MTR	Gugamal	Chikhaldra	Chikhaldra	Mamana	41	N-21'25'28.58"	E-077'15'44.24
	Fooder Development Kuran Vikas	5	29.50	29.50	MTR	Gugamal	Chikhaldra	Chikhaldra	Mamana	41	N-21'25'28.58"	E-077'15'44.24
	Tarubanda Range (Ha)	100	7.00	7.00	MTR	Gugamal	Tarubanda	-	-	-	-	-
	Lantena work sub Total	**215.00**		**50.29**								
iv	**Eradication of invasive species**											
	Dongarkhandala -02	10	0.93	0.93	MTR	Akola	Buldhana	Dongarkhandala	Dongarkhandala -02	290	20 32 14.50	76 20 01.19
	Borala	10	0.93	0.93	MTR	Akola	Buldhana	Dongarshevli	Borala	255	20 30 20.61	76 21 11.56
	Karwand	10	0.93	0.93	MTR	Akola	Buldhana	Amdapur	Karwand	254	20 31 09.34	76 22 47.88
	Tofkhana	10	0.93	0.93	MTR	Akola	Buldhana	Warwand	Tofkhana	316	20 32 25.80	76 16 57.55
	Pimpalgaon Nath	10	0.930	0.93	MTR	Akola	Khmagon	Motala	Pimpalgaon Nath	301	20.61.3.35	76.31.3.99
	Botha-1	10	0.93	0.93	MTR	Akola	Khamgaon	Botha	Botha-1	261	20.35.00.65	76.21.51.48
	Waki Beat	10	0.93	0.93	MTR	Akola	Khamgaon	Botha	Waki	241	20.53.99	76.39.01
	Tarapur Beat	10	0.93	0.93	MTR	Akola	Khamgaon	Motala	Tarapur	299	20.35.50	76.16.11
	Total	**80**	**7.44**	**7.44**								
	Lantana Removal	40	0.08	3.20	MTR	Akola	Akola	Vanoja	Fetra		20 26 59	77 08 56
	Lantana Removal	40	0.08	3.20	MTR	Akola	Akola	Vanoja	Yedshi		20 22 34	77 10 50
	Lantana Removal	40	0.08	3.20	MTR	Akola	Akola	Vanoja	Vanoja		20 23 59.13	77 10 21.90
	Lantana Removal	50	0.08	4.00	MTR	Akola	Akola	Vanoja	pimpalsenda		20 36 57.89	77 16 86.38
	Lantana Removal	50	0.08	4.00	MTR	Akola	Akola	Vanoja	Kasmar	122	N 20 42 59	E 77 17 83
	Lantana Removal	50	0.08	4.00	MTR	Akola	Akola	Somthana	Girda		20 42 26.37	77 50 54.07
	Lantana Removal	50	0.08	4.00	MTR	Akola	Akola	Somthana	Somthana		20 42 31.69	77 57 94.64
	Total	**320.00**	**0.56**	**25.60**								
	Total Eradication of invasive species	**400.00**		**33.04**								

.	Works proposed				Location of work						Latlong	
Rule No.	Item of work	Quantity	Rate	Amount (Rs. in Lakhs	Circle	Division	Range	Round	Beat	Compartment No	Latitude	Longitude
1	**2**	**3**	**4**	**5**	**6**	**7**	**8**	**9**	**10**	**11**	**12**	**13**
iv	Lantena Eradication	450	0.11	49.50	MTR	Pandharkawada WL	Patanbori	Sunna, Arli	Maregaon, sunna, Wadvat, Bhavankhori, Daryapur	102, 105, 111, 112, 109, 110, 100, 119, 103, 104	19°91'4.34"	78° 51'8.92"
		170	0.11	18.70	MTR	Pandharkawada WL	Parwa	Mathani	mathani, Sawargaon	136, 143, 134, 130	19°55'74.5"	78°23'43.8"
iv	Lantena Eradication	200	0.00	8.00	MTR	Pandharkawada	Patanbori	Sunna	maregaon, Pilkhan	109, 98	19°54'98.00"N	78° 30'90.00"E
	Total	**820.00**		**76.20**								
		2912.00		**278.71**								
	Eradication of invasive species (Mission Melghat)	70.00	0.17	11.90	MTR	Melghat WL Dn.	Akot	Popatkhed	Malkapur	983	N 21 14 49	E 77 252
		50.00	0.17	8.50	MTR	Melghat WL Dn.	Akot	Popatkhed	Malkapur	1021	N 21 13 31.53	E 77 04 16.62
		25.00	0.17	4.25	MTR	Melghat WL Dn.	Ghatang	Ghatang	Shirajban	83	N21.29.215	E077.23.157
		25.00	0.17	4.25	MTR	Melghat WL Dn.	Ghatang	Ghatang	Shirajban	85	N21.29.076	E077.23.088
		25.00	0.17	4.25	MTR	Melghat WL Dn.	Ghatang	Ghatang	East Bhawai	87	N21.28.676	E077.22.675
		30.00	0.17	5.10	MTR	Melghat WL Dn.	Ghatang	Ghatang	West Bhawai	90	N21.29.014	E077.21.609
		50.00	0.17	8.50	MTR	Melghat WL Dn.	Ghatang	Bhawai	East Semadoh	91	N21.29.237	E077.22.540
		25.00	0.17	4.25	MTR	Melghat WL Dn.	Ghatang	Makhala	S.Chunkhadi	207	N21.34.276	E077.23.541
		25.00	0.17	4.25	MTR	Melghat WL Dn.	Ghatang	Makhala	S. Chunkhadi	208	N21.34.312	E077.22.659
		50.00	0.17	8.50	MTR	Melghat WL Dn.	Ghatang	Bhawai	East Tavara	77	N21.29.967	E077.24.092
		25.00	0.17	4.25	MTR	Melghat WL Dn.	Ghatang	Makhala	Tavara	202	N21.32.204	E077.24.267
		400.00		**68.00**								
		10	0.17	1.70	MTR	Sipna	Hatru	Retyakheda	E Retyakheda	5,33,534	N21 38 59.99	E077 15 25.09
		10	0.17	1.70	MTR	Sipna	Hatru	E Bhutrum	E Bhutrum	525	N21 41 47.75	E077 15 30.59
		17	0.17	2.89	MTR	Sipna	Hatru	Sipna Patel	Hatru	488	N21 39 15.00	E077 19 30.78
		11	0.17	1.87	MTR	Sipna	Raipur	N Raipur	W raipur	257	N21 36 36.17	E77 15 00.79
		13	0.17	2.21	MTR	Sipna	Raipur	W chunkhadi	E Raipur	266	N21 36 01.6	E77 17 58.9
		10	0.17	1.70	MTR	Sipna	Raipur	S raipur	N Kuvapati	227	N21 33 26	E77 16 28
		10	0.17	1.70	MTR	Sipna	Raipur	Bodpadav	S Raipur	230	N21 34 58.2	E77 16 30.9
		10	0.17	1.70	MTR	Sipna	Raipur	Bodpadav	S Raipur	254	N21 34 34.9	E77 15 15.2

.	Works proposed				Location of work						Latlong	
Rule No.	Item of work	Quantity	Rate	Amount (Rs. in Lakhs	Circle	Division	Range	Round	Beat	Compartment No	Latitude	Longitude
1	**2**	**3**	**4**	**5**	**6**	**7**	**8**	**9**	**10**	**11**	**12**	**13**
	Eradication of invasive species (Mission Melghat)	16	0.17	2.72	MTR	Sipna	Jarida	N.Barugavagon	Jarida	402	21 38 11.09	077 29 77.01
		16	0.17	2.72	MTR	Sipna	Jarida	E. Madizadp	Madizadp	283	21 36 41.54	077 22 47.10
		16	0.17	2.72	MTR	Sipna	Jarida	S. Madizadp	Madizadp	212	21 35 51.22	077 22 03.96
		15	0.17	2.55	MTR	Sipna	Jarida	E.Ghana	Khandukheda	306	22 34 08.81	077 28 50.56
		16	0.17	2.72	MTR	Sipna	Jarida	E.Khandukhed a	Khandukheda	303	21 34 30.16	077 27 47.13
		16	0.17	2.72	MTR	Sipna	Jarida	W.Ghana	Khandukheda	300	21 33 41.68	077 26 06.90
		16	0.17	2.72	MTR	Sipna	Jarida	W.Ghana	Khandukheda	302	21 34 10.70	077 26 29.39
		16	0.17	2.72	MTR	Sipna	Jarida	Mehariyam:	Mehariyam	331	21 38 39.01	077 27 43.00
		16	0.17	2.72	MTR	Sipna	Jarida	E.Marita	Mehariyam	328	21 38 37.0	077 25 37.2
		15	0.17	2.55	MTR	Sipna	Jarida	E.Chunkhadi	Chunkhadi	209	21 35 00.27	077 22 52.09
		11	0.17	1.87	MTR	Sipna	Semadoh	Kuwapati	Kuwapati	157	N.21°31'54.86"	E 77°15'37.47"
		10	0.17	1.70	MTR	Sipna	Semadoh	Jawaharkund	S Semadoh	102	N.21°27'41.48"	E77°18'56.43"
		11	0.17	1.87	MTR	Sipna	Semadoh	Talai	N Makhla	217	N.21°33'38.56"	E77°20'54.64"
		17	0.17	2.89	MTR	Sipna	Semadoh	Talai	Talai	173	N.21°32'32.15"	E77°18'51.60"
		10	0.17	1.70	MTR	Sipna	Semadoh	Talai	Kumbhikhandi	172	N.21°32'31.54"	E77°17'59.40"
		30	0.17	5.10	MTR	Sipna	Chourakund	N. Chourakund	N. Chourakund	591	N21°21 37 19.9	E77 06 31.6
		62	0.17	10.54	MTR	Sipna	Chourakund	N. Chourakund	Tangada	661	N.21°36 49.4	E77°05 40.8
		400.00		**68.00**								
		30.00	0.17	5.10	MTR	Gugamal	Harisal	S. Chourakund	Thalda	654	N 21 34 36.00	E 077 06 40.00
		30.00	0.17	5.10	MTR	Gugamal	Harisal	Harisal	Rora	634	N 21 31 25.90	E 077 08 39.81
		30.00	0.17	5.10	MTR	Gugamal	Harisal	Harisal	Harisal	632	N 21 32 37.00	E 077 07 48.00
		30.00	0.17	5.10	MTR	Gugamal	Harisal	Harisal	Shevarimunda	637	N 21 32 08.81	E 077 06 69.30
		30.00	0.17	5.10	MTR	Gugamal	Tarubanda	Koha	Shipanakhandi	821	N21'24'06.12"	E077'09'30.52"
		50.00	0.17	8.50	MTR	Gugamal	Tarubanda	Kund	Masanam	780	N21'25'37.75"	E077'13'09'.22"
		30.00	0.17	5.10	MTR	Gugamal	Tarubanda	Adhao	Koha	867	N21'23'20.60"	E077'05'41.4"
		50.00	0.17	8.50	MTR	Gugamal	Tarubanda	Koha	Dhalate	825	N21'24'14.50"	E077'07'12.10"
		40.00	0.17	6.80	MTR	Gugamal	Dhakna	Dhakna,	S.Dhakna,	849	N-210 24 51.17''	E-077 04 21.49
		40.00	0.17	6.80	MTR	Gugamal	Dhakna	Dolar,	S.Dhakna,	854	N-21 25 22.49''	E-077 02 44.81
		40.00	0.17	6.80	MTR	Gugamal	Dhakna	Boripati	N Bhanmdum	886	N-21 23 19.05''	E-077 02 44.07
		400.00		**68.00**								

.	Works proposed				Location of work						Latlong	
Rule No.	Item of work	Quantity	Rate	Amount (Rs. in Lakhs	Circle	Division	Range	Round	Beat	Compartment No	Latitude	Longitude
1	**2**	**3**	**4**	**5**	**6**	**7**	**8**	**9**	**10**	**11**	**12**	**13**
	Eradication of invasive species (Mission Melghat)	30.00	0.17	5.10	MTR	Akot	Somthana	Amona	Amona	1071	N 21:11:21.418"	E 76:51:25.773"
		40.00	0.17	6.80	MTR	Akot	Wan	Barukheda	Barukheda	1104 1105	N 21.14.'15.4"	E 076:50'00.4"
		30.00	0.17	5.10	MTR	Akot	Dhargad	Bori	Ambeda	995	N 21:18:36.689"	E 76:57:42.691"
		25.00	0.17	4.25	MTR	Akot	Dhargad	Dhargad	E.Dhargad	1010 1008	N 21:16:07.180"	E 76:57:22.694"
		25.00	0.17	4.25	MTR	Akot	Dhargad	Gullarghat	W.Dhargad	1014 1015 1016 1017	N 21:16:14.946"	E 77:00:30.895"
		30.00	0.17	5.10	MTR	Akot	Dhargad	Kelpani	Kelpani	1100	N 21:13:41.288"	E 76:50:20.617"
		40.00	0.17	6.80	MTR	Akot	Somthana	Somthana	Somthana ku.	1095	N 21:15:42.602"	E 76:56:13.122"
		40.00	0.17	6.80	MTR	Akot	Wan	Nagartas	N.Nagartas	1257	N 21:12:15.241"	E 76:47:55.114"
		35.00	0.17	5.95	MTR	Akot	Sonala	Wasali	Ambabrwa	360	N 21:14:27"	E 076:39:12"
		25.00	0.17	4.25	MTR	Akot	Sonala	Sonala	Rohinkhidki		N 21.01.'126.8"	E076:045'00.5"
		40.00	0.17	6.80	MTR	Akot	Sonala	Wasali	S.Chunkhadi	359	N 21.26.'21.96"	E076:67'68.51"
		40.00	0.17	6.80	MTR	Akot	Wan	Talai	E.Talai	1243	N 21.25.'25.94"	E076.802'720"
		400.00		**68.00**								
		1600.00		**272.00**								
	Total	**5992.00**		**918.40**								
5(2)(k)	**Establishment, operation and maintenance of animal rescue centre and veterinary treatment facilities for wild animals**											
ii	**Veterinary tratment facilities for wild animals**											
	Medicine	lumsum	2.00	2.00	MTR	Sipna	-	-	-	-	-	-
			Total	**2.00**								
iii	**Animal seizing & capturing devices**											
	Cages	1	2.00	2.00	MTR	Sipna	-	-	-	-	-	-
	Bear Trap and Treatment Cage	2	1.50	3.00	MTR	Akola	Buldhana	Dongarkhandala			-	
	Bear Trap and Treatment Cage	2	1.50	3.00	MTR	Akola	Khmagon	Botha				
	Bear Trap and Treatment Cage	1	1.00	1.00	MTR	Akola	Mehakar	Lonar				
	Total	**6**		**9.00**								
	Total of 5(2)(k)	**6.00**		**11.00**								
	Total for Wildlife Management & Man-animal conflict mitigation	**5998.00**		**929.40**								
	Grand Total for Activities under not less than 80% component	**6880.00**		**3045.30**								

.	Works proposed				Location of work						Latlong	
Rule No.	Item of work	Quantity	Rate	Amount (Rs. in Lakhs	Circle	Division	Range	Round	Beat	Compartment No	Latitude	Longitude
1	**2**	**3**	**4**	**5**	**6**	**7**	**8**	**9**	**10**	**11**	**12**	**13**
5(3)(d)	**Construction, up-gradation and maintenance of inspection paths, forest roads in forest area, fire lines, watch towers, check posts and timber depots**											
5(3)d	Repair Dhamni Kundi Road in Ghatang Range Melghat Wildlife Division Paratwada (3.200 km)	3.2	0.63	0.63	MTR	Melghat WL Dn.	Ghatang	Ghatang	East Bhawai	86	N 21 28 13	E 77 24 25
	Repair to Road from Bhavai to Aampadav in Ghatang Range Melghat Wildlife Division Paratwada (7.900 km)	7.9	1.55	1.55	MTR	Melghat WL Dn.	Ghatang	Bhawai	East Semadoh	84	N 21 29 47	E 77 22 57
	Repair to Road from Bhawai to Mundaam in Ghatang Range Melghat Wildlife Division Paratwada (7.850 km)	7.85	1.54	1.54	MTR	Melghat WL Dn.	Ghatang	Bhawai	East Taora	82	N 21 30 11	E 77 24 44
	Repair to Road from Jawaharkund to C.No. 194,195 & 196 in Ghatang Range MelghatWildlife Division Paratwada (7.000 km)	7	1.37	1.37	MTR	Melghat WL Dn.	Ghatang	Bhawai	South Makhala	195	N 21 51 76.89	E 77 37 15.41
5(3)(d)	Repair to Road from C.No.1218 to C.No.1220 in Dhulghat Range ( )	2	0.46	0.46	MTR	Melghat WL Dn.	Dhulghat	Biroti	West Biroti	1218	N 21 29 43.44	E 77 66 52.85
	Repair to Road from C.No.1240 to C.No.1241 in Dhulghat Range (2.250 Km)	2.25	0.52	0.52	MTR	Melghat WL Dn.	Dhulghat	Dhulghat	Dhulghat	1240	N 21 31 86.65	E 76 79 60.21
	Repairs to Road from C.No.1236 to C.No.1241 in Dhulghat Range (3.00 km)	3	0.70	0.70	MTR	Melghat WL Dn.	Dhulghat	Dhulghat	North Anyar	1236	N 21 28 64.77	E 76 748.44
	Repairs to Road from C.No.1298 to C.No.1216 in Dhulghat Range (4.00 km)	4	0.77	0.77	MTR	Melghat WL Dn.	Dhulghat	Biroti	Chendo	1298	N213025.42	E7670 89.48
	Repairs to Road in C.No.1123 in Dhulghat Range (3.00 km)	3	0.70	0.70	MTR	Melghat WL Dn.	Dhulghat	Dhulghat	Wan	1123	N 21 26 91.53	E 76 80 91.42
	Repairs to Road From Aawalpul To Kanspani in Akot Range. (4.000 Km)	4	0.78	0.78	MTR	Melghat WL Dn.	Akot	Popatkheda	Popatkheda	1020	N 21 14 38.62	E 77 05 10.64
	Repairs to Road From Alampur to Distric Boundry Akot Range. (4.300 Km)	4.3	0.84	0.84	MTR	Melghat WL Dn.	Akot	Dhondaakhar	West Jitapur	1079	N 21 12 18.05	E 77 03 53.89
	Repairs to Road From Madhi Road To C.No. 958, 971 in Akot Range. (6.000 Km)	1	1.18	1.18	MTR	Melghat WL Dn.	Akot	Khatkali	South Kusumbi	971	N 21 18 21.38	E 77 09 20.83
	Repairs to Road From Nagdevata To C.No.1020 Akot Range. (3.500 Km)	3.5	0.69	0.69	MTR	Melghat WL Dn.	Akot	Popatkheda	Popatkheda	1020	N 21 14 26.56	E 77 04 20.04
	Repairs to Road From Pirbaba To Waghamay Akot Range. (5.500 Km)	5.5	1.08	1.08	MTR	Melghat WL Dn.	Akot	Dhondaakhar	East Jitapur	1078	N 21 12 30.87	E 76 59 52.03
	Providing repairs to internal road for chainage 0/000 to 4.500 Km Mozari to Sonarpati road in Jamli Range of Melghat Wildlife Division Paratwada	4.5	0.72	0.72	MTR	Melghat WL Dn.	Jamli	Wastapur	North Chandrabhaga	30	N 21 22 50.45	E 77 18 35.59
	Providing repairs to internal road for chainage 0/000 to 7.500 Km in C.No.950 Akot Boundary in Jamli Range of Melghat Wildlife Division Paratwada.	7.5	1.16	1.16	MTR	Melghat WL Dn.	Jamli	Khongada	Rajdevbaba	954	N 21 18 55.07	E 77 08 38
	Providing repairs to internal road for chainage 0/000 to 8.000 Km in C.No.953 Rajdevbaba to girguti Camp in Jamli Range of Melghat Wildlife Division Paratwada.	8	1.28	1.28	MTR	Melghat WL Dn.	Jamli	Khongada	Rajdevbaba	18	N 21 18 56.60	E 77 08 58.29
	Total	**78.50**		**15.97**								

.	Works proposed				Location of work						Latlong	
Rule No.	Item of work	Quantity	Rate	Amount (Rs. in Lakhs	Circle	Division	Range	Round	Beat	Compartment No	Latitude	Longitude
1	**2**	**3**	**4**	**5**	**6**	**7**	**8**	**9**	**10**	**11**	**12**	**13**
	Road Repair (17 Road Work)	92.4	0.16	14.75	MTR	Sipna	Semadoh	Kuvapati, Kolkas, Talai, Javaharkund, Semadoh, Makhala, Pili	Pipalpadav, Kolkas, E. Kuvapati, Kuvapati, Kumbhikhandi, S kolkas, Masondi, N Makhala, Haldukheda, Makhala, N Pili, Pili, Chunaghani	149, 150, 155, 157, 156, 161, 158, 152, 154, 159, 119, 121, 105, 117, 118, 120, 190, 187, 148, 146, 149, 132, 153, 224, 218, 217, 186, 165, 166, 162	N 21 30 35.00 N 21 52 81.80 N 21 51 24.00 N 21 30 26.00 N 21 51 52.70 N 21 30 01.00 N 21 39 35.00 N 21 29 42.45 N 21 33 04.20 N 21 33 34.72 N 21 26 75.80	E 077 11 54.00 E 077 23 27.30 E 077 11 29.01 E 077 12 36.00 E 077 28 97.39 E 077 13 42.00 E 077 16 02.80 E 077 17 54.26 E 077 23 42.7 E 077 22 55.5 E 077 12 11.1
	Road Repair (5 Road Work)	27.71	0.16	4.43	MTR	Sipna	Hatru	Retyakheda, W Bhutrum	E Retyakheda, N Retyakheda,	505, 532, 542 540, 541 505, 536, 539 530, 545 530	N 21 63 70.79 N 21 37 67.8 N 21 63 93.27 N 21 39 57.2 N 21 41 46.0	E 077 26 50.56 E 077 13 25.9 E 077 25 91.95 E 077 15 39.00 E 077 14 89.9
	Road Repair (6 Road Work)	28	0.16	4.47	MTR	Sipna	Jarida	Mehriam, Khandukheda, Jarida	E Marita, Mehriam, W Ghana, E Khandukheda, N Barugavhan, E Khadimal, S Barugavhan	330, 329, 324, 328, 325, 302, 303, 402, 319, 320, 322, 324, 335	N 21 38 04.51 N 21 34 22.49, N 21 40 10.92, N 21 33 59.91, N 21 37 43.64 N 21 39 59.44	E 077 24 36.95 E 077 26 28.63 E 077 28 20.56 E 077 26 29.56 E 077 26 18.56 E 077 28 42.81
	Road Repair (10 Road Work)	65.5	0.16	10.46	MTR	Sipna	Raipur	Bodpadav W Chunkhadi S Raipur N Raipur maythanballa E Retyakheda	S Raipur W Bod Beladoh N Kuvapati Boratyakheda W Raipur N Madizadap W Madizadap Dolaram S Kuhi	254 246 242 241 240 238 254 230 229 219 220 215 226 225 257 247 248 249 500 501 271 266 270 272 274 264 503	N 21 34 00.77 N 21 34 53.3 N 21 33 18.33 N 21 35 10.97 N 21 37 34.00 N 21 36 16.5 N 21 38 70.10 N 21 34 40.61	E 077 34 00.81 E 077 16 47.5 E 077 17 11.70 E 077 15 27.2 E 077 18 53.07 E 077 17 94.7 E 077 18 39.5 E 077 16.20.36
		213.61		**34.11**								
	Repairs and maintenance of Bandarkahu to Bobara camp	10	0.22	2.20	MTR	Gugamal	Chikhaldra	Chikhaldara	-	-	N-21'23'50.62"	E-077'16.14.08
	Repairs and maintenance of Dhondriam to Athanakhandi	4	0.22	0.88	MTR	Gugamal	Chikhaldra	Khongada	-	-	N-21'35.'27.78."	E-077'21.03.27
	Repairs and maintenance of Chikhaldara safari Gate to Vairat	8	0.22	1.76	MTR	Gugamal	Chikhaldra	Vairat	-	-	N-21'25'40."	E-077'14.42
	Range Repair to Road Amrai to Jamunban	2.5	0.22	0.55	MTR	Gugamal	Tarubanda	Rangrao	Amrai	770	N-21'24'07.34"	E-077'13'37.80
	Range Repair to Road Baitapati to Chikhalpati	3.5	0.22	0.77	MTR	Gugamal	Tarubanda	Chikli	Keli	763	N-21'26'30.01"	E-077'07'52.4
	Range Repair to Road Kandribaba to Chikhalpati	2	0.22	0.44	MTR	Gugamal	Tarubanda	Chikli	Keli	763	N-21'27'09.92"	E-077'10'06.49
	Range Repair to Road Kandribaba to Kali	3	0.22	0.66	MTR	Gugamal	Tarubanda	Chikli	Keli	763	N-21'27'05.61"	E-077'10'26.14

.	Works proposed				Location of work						Latlong	
Rule No.	Item of work	Quantity	Rate	Amount (Rs. in Lakhs	Circle	Division	Range	Round	Beat	Compartment No	Latitude	Longitude
1	**2**	**3**	**4**	**5**	**6**	**7**	**8**	**9**	**10**	**11**	**12**	**13**
	Range Repair to Road Kund Raod to Wadazira	2	0.22	0.44	MTR	Gugamal	Tarubanda	Rangrao	Amrai	764	N-21'27'09.26"	E-077'10'49.31
	Range Repair to Road Wadazira to Road	1.5	0.22	0.33	MTR	Gugamal	Tarubanda	Rangrao	Amrai	765	N-21'26'42.81"	E-077'10'01.44
	Range Repair to Road Katkumbhpati to Sakri	2.3	0.22	0.51	MTR	Gugamal	Tarubanda	Rangrao	Amrai	764	N-21'26'33.32"	E-077'11'02.39
	Range Repair to Road Kilcha to Mamadev	11	0.22	2.42	MTR	Gugamal	Tarubanda	Adhav	Raksha	834	N-21'27'35.68"	E-077'10'19.11
	Range Repair to Road Masan Anikat to Baithapati	2	0.22	0.44	MTR	Gugamal	Tarubanda	Chikli	Keli	763	N-21'27'35.5"	E-077'10'19.02
	Range Repair to Road Pathkahu to Barukundi Road	7	0.22	1.54	MTR	Gugamal	Tarubanda	Chikli	Keli	763	N-21'28'48.07"	E-077'09 04.01
5(3)(d)	Range Repair to Road Rest house to Masan anicut	1	0.22	0.22	MTR	Gugamal	Tarubanda	Rangrao	Tarubanda	762	N-21'23'42.20"	E-077'06 57'10
	Range Repair to Road T-Point to Kali Road	2.8	0.22	0.62	MTR	Gugamal	Tarubanda	Chikli	Keli	763	N-21'24'07.38"	E-077'13'37.70
	Range Repair to Road Adhav to Bhosakhandi	5	0.22	1.10	MTR	Gugamal	Tarubanda	Adhav	Adhav	838	N-21'24'11.06"	E-077'09'18.00
	Range Repair to Road Adhav to Dudaam	4	0.22	0.88	MTR	Gugamal	Tarubanda	Adhav	Adhav	827	N-21'24'25.06"	E-077'10'08.9
	Range Repair to Road Dambar Road to Fanglaballa	1.5	0.22	0.33	MTR	Gugamal	Tarubanda	Adhav	Raksha	834	N-21'26'13.65"	E-077'11'27.54
	Range Repair to Road Dolarbaba to Zirinala	3	0.22	0.66	MTR	Gugamal	Tarubanda	Adhav	Adhav	838	N-21'26'16.64"	E-077'11'27.55
	Range Repair to Road Hatkuwa to Jamunzira Road	1	0.22	0.22	MTR	Gugamal	Tarubanda	Rangrao	Rangrao	767	N-21'26'09.61"	E-077'11'12.87
	Range Repair to Road Hatkuwa to Tarubanda	2	0.22	0.44	MTR	Gugamal	Tarubanda	Rangrao	Tarubanda	766	N-21'26'20.05"	E-077'12'33.11
	Range Repair to Road Kandribaba to Kilcha	4.3	0.22	0.95	MTR	Gugamal	Tarubanda	Rangrao	Tarubanda	766	N-21'26'35.53"	E-077'14'15.03
	Range Repair to Road Raksha to Jodkuta	5	0.22	1.10	MTR	Gugamal	Tarubanda	Adhav	Raksha	834	N-21'24'29.28"	E-077'10'27.29
	Range Repair to Road Raksha to Khtiballa	2	0.22	0.44	MTR	Gugamal	Tarubanda	Adhav	Raksha	834	N-21'26'17.64"	E-077'11'26.55
	Range Repair to Road Raksha to Kilcha	3	0.22	0.66	MTR	Gugamal	Tarubanda	Adhav	Raksha	834	N-21'26'09.32"	E-077'11'12.37
5(3)d	Range Repair to Road Sadukundi to Masanamroad	6	0.22	1.32	MTR	Gugamal	Tarubanda	Kund	Masanaam	7,66,777	N-21'28'07.38"	E-077'13'37.50
	Range Repair to Road Nilikahu to Sakhri camp	7.5	0.22	1.65	MTR	Gugamal	Tarubanda	Kund	Zandiaam	1,37,125	N-21'26'11.6"	E-077'09'18.8
	Range Repair to Road Rangrao road to Kund camp	6	0.22	1.32	MTR	Gugamal	Tarubanda	Kund	Shipnakhandi	773	N-21'24'25.6"	E-077'10'85.10
	Range Repair to Road Kund camp to Bobrao camp	6	0.22	1.32	MTR	Gugamal	Tarubanda	Kund	Kund,Zandiaam	1,38,136	N-21'26'13.65"	E-077'11'26.54
	Range Repair to Road Shipnakhandi camp to Koha Road	13	0.22	2.86	MTR	Gugamal	Tarubanda	Koha	Shipnakhandi	7,73,821	N-21'26'56.64"	E-077'11'17.55
	Range Repair to Road Shipnakhandi camp to Koha Road	13	0.22	2.86	MTR	Gugamal	Tarubanda	Koha	Dhalata,Rabang	77,38,22,825	N-21'28'09.92"	E-077'12'06.49
	Range Repair to Road Rangrao jod to Banam camp Road	9.5	0.22	2.09	MTR	Gugamal	Tarubanda	Koha	Rabang	8,15,817	N-21'28'05.61"	E-077'10'26.14

.	Works proposed				Location of work						Latlong	
Rule No.	Item of work	Quantity	Rate	Amount (Rs. in Lakhs	Circle	Division	Range	Round	Beat	Compartment No	Latitude	Longitude
1	**2**	**3**	**4**	**5**	**6**	**7**	**8**	**9**	**10**	**11**	**12**	**13**
	Range Repair to Road Kund kuran vikas road	3	0.22	0.66	MTR	Gugamal	Tarubanda	Kund	Kund	42	N-21'29'09.92"	E-077'10'06.49
	Range Repair to Road Borikheda to Mamadeo road	7	0.22	1.54	MTR	Gugamal	Dhakna	Borikhada	Borikhada	746	N-21'28'01.56"	E-077'03'08.33
	Range Repair to Road Chikoriaam to Gugamal Jod	9.4	0.22	2.07	MTR	Gugamal	Dhakna	Borikhada	E.Bhandum	888.885	N-21'22'22.9"	E-077'00'28.8
	Range Repair to Road Adhav Road	3.9	0.22	0.86	MTR	Gugamal	Dhakna	Dhakna	E Dhakana	840	N-21'25'31.14"	E-077'03'49.39
	Range Repair to Road Kilcha /Road	10.31	0.22	2.27	MTR	Gugamal	Dhakna	Dhakna	E Dhakana	742	N-21'26'33.74"	E-077'00'37.94
	Range Repair to Road Dolar Jod to Piparikuwa to Gugamal Jod	6	0.22	1.32	MTR	Gugamal	Dhakna	Dhakna	W. Dhakna	849	N-21'25'23.72"	E-077'02'42.03
	Range Repair to Road Pathulda camp to Akot Bounday	6.3	0.22	1.39	MTR	Gugamal	Dhakna	Dolar	Dolar	1141.1140.1145	N-21'19'39.35"	E-076'55'20.66
	Range Repair to Road Dolar to Golai Boundary	10.8	0.22	2.38	MTR	Gugamal	Dhakna	Dolar	Kasmar	1160.1141.1145	N-21'23'20.53"	E-076'58'05.16
	Range Repair to Road Doiphata to Gugamal Jod	6	0.22	1.32	MTR	Gugamal	Dhakna	Dhakna	Suklihenda	858.86	N-21'23'43.57"	E-077'05'36.50
	Range Repair to Road Chikoriaam to Boripati tower	3.3	0.22	0.73	MTR	Gugamal	Dhakna	Boripati	E. Dhakna	884	N-21'21'50.60"	E-076'59'38.62
	Range Repair to Road Dolar to Dhakna road	12.9	0.22	2.84	MTR	Gugamal	Dhakna	Dhakna	W.Dhakna	849	N-21'21'45.63"	E-077'03'38.07
	Range Repair to Road Dolar Kekdakheda jod to Bhaulyakundi road	5.4	0.22	1.19	MTR	Gugamal	Dhakna	Dolar	Kasmar	1160.1161	N-21'23'17.40"	E-076'57'19.54
	Range Repair to Road Kanapur sangam jod road	3.2	0.22	0.70	MTR	Gugamal	Dhakna	Bhandum	Dhabiya	895	N-21'26'45.21"	E-076'59'38.74
	Range Repair to Road Nirikshan hut to kekda road	0.608	0.22	0.13	MTR	Gugamal	Dhakna	Dolar	Kasmar	1160	N-21'23'24.13"	E-076'58'00.48
	Range repair to Road Mangiya to Khari	4.6	0.22	1.01	MTR	Gugamal	Harisal	Mangiya			N-21'30'30.376"	E-077'10.463
	Range repair to Road Sankul to Matakol gate	3	0.22	0.66	MTR	Gugamal	Harisal	Harisal			N-21'31'786"	E-077'06.576
	Range repair to Road Raipur jod to jambukuwa camp	2.3	0.22	0.51	MTR	Gugamal	Harisal	W.Anjanzadap			N-21'35'530"	E-077'11.411
	Range repair to Road Jambukuwa camp to Malur	4	0.22	0.88	MTR	Gugamal	Harisal	W.Anjanzadap			N-21'35'687"	E-077'08.880
	Range repair to Road Matakol to Khari	8	0.22	1.76	MTR	Gugamal	Harisal	Harisal			N-21'33'064"	E-077'10.576
	Range repair to Road zagrina;a Thalda to Kudbi Chichapati	10.8	0.22	2.38	MTR	Gugamal	Harisal	W.Chourakund			N-21'34'360"	E-077'06.192
	Range repair to Matakol to Shewarimunda	3.3	0.22	0.73	MTR	Gugamal	Harisal	Harisal			N-21'32'302"	E-077'07.900
	Range repair to Road Kawdaziri to Shewrimunda	1.8	0.22	0.40	MTR	Gugamal	Harisal	Harisal			N-21'33'861"	E-077'07.614
	Range repair to Road Chichapati sadubaba to	6.7	0.22	1.47	MTR	Gugamal	Harisal	Harisal			N-21'32'689"	E-077'07.773
	Sub Total	**287.02**		**63.14**			-	-	-	-	-	-

.	Works proposed				Location of work						Latlong	
Rule No.	Item of work	Quantity	Rate	Amount (Rs. in Lakhs	Circle	Division	Range	Round	Beat	Compartment No	Latitude	Longitude
1	**2**	**3**	**4**	**5**	**6**	**7**	**8**	**9**	**10**	**11**	**12**	**13**
(ii)	Repairs of existing road	30	0.09	2.70	MTR	Akola	Buldhana	Dogarsevli,Dongarkhandala	Gondhankhed, Dongarkhandala-02, Dongarkhandala- 1, Borala, South Devhari	308	76 30 61.27	20 52 23.99
		15	0.09	1.35	MTR	Akola	Khamgaon	Botha	Botha,Paldhag	149	76.18.58	20.35.42
		30	0.25	7.50	MTR	Akola	Akola					
	Total	**75**		**11.55**								
	Total Road amount	**654.13**		**124.77**								
5(3)(d)	Maintance of flush causway (5 works)	5	lumsum	43.00	MTR	Sipna	Semadoh	Kuvapati Kolkas	Pipalpadav Kuvapati Kolkas	161 158 155 150	N 21 51 24.00 N 21 30 26.00 N 21 51 52.70 N 21 30 01.00 N 21 39 35.00	E 077 11 29.01 E 077 12 36.00 E 077 28 97.39 E 077 13 42.00 E 077 16 02.80
	Maintance of flush causway (10 works)	10	lumsum	20.00	MTR	Sipna	Semadoh	Kolkas Kuvapati	Kolkas Pipalpadav Kuvapati N Pili	150 151 155 161 162 154 149	N 21 30 20 N 21 29 52 N 21 31 41 N 21 51 39 N 21 51 57 N 21 51 57 N 21 51 37 N 21 52 45	E 077 12 32 E 077 18 53 E 077 13 58 E 077 26 51 E 077 27 73 E 077 28 08 E 077 25 24 E 077 21 68
	Maintance of flush causway (5 works)	5	lumsum	21.00	MTR	Sipna	Chaurakund	N Chaurakund Rangubeli	N Chaurakund W Kutanga	587 586 577	-	-
	Construction of flush causway (3 works)	3	lumsum	7.00	MTR	Sipna	Semadoh	Talai S Raipur	Kumbhikhandi N Kuvapati	225 224	N 21 54 12 N 21 53 50 N 21 53 34	E 077 27 13 E 077 27 24 E 077 26 10
	Causeway (3 work)	3	0.30	9.00	MTR	Sipna	Raipur	W Chunkhadi N Raipur	Beladoh,W Raipur	229 250	N 21 34 40.32 N 21 35 29.68 N 21 34 48.12	E 077 18 21.42 E 077 13 48.17 E 077 17 28.41
	Sub Total	**26.00**		**100.00**								
i	Construction watch towers	1	10.00	10.00	MTR	Pandharkawada	Parwa	Sawargaon	Ganeri	125	N 19 86 83 09	E 78 41 49 9
	Construction, up-gradation and maintenance of Inspection paths/Forest roads in forest area/flush causway/watch towers /Check posts/Check Naka (Mission Melghat)											
	Construction of Flushcauseway No.15 on Bhawai To Aamapadao Road in Ghatang Range.	15.00		16.00	MTR	Melghat WL Dn.	Ghatang	Bhawai	East Semadoh	84	N 21 30 13.39	E 77 23 23.22
	Construction of Flushcauseway No.4 at Gugalpati Nalah in Akot Range.	4.00		4.00	MTR	Melghat WL Dn.	Akot	Khatkali	S.Kusumbi	962	N 21 16 55.59	E 77 08 28.44
		19.00		**20.00**								

.	Works proposed				Location of work						Latlong	
Rule No.	Item of work	Quantity	Rate	Amount (Rs. in Lakhs	Circle	Division	Range	Round	Beat	Compartment No	Latitude	Longitude
1	**2**	**3**	**4**	**5**	**6**	**7**	**8**	**9**	**10**	**11**	**12**	**13**
	Check Post	1.00		4.00	MTR	Sipna	Hatru (Rajapata Checkpost)	E Bhutrum	E Bhutrum	527	N21 49 55.9	E077 13 37.7
	Check Post	1.00		4.00	MTR	Sipna	Hatru (Domi Checkpost)	E Bhutrum	Ruipathar	522	N21 42 75.7	E077 14 60.1
	Check Post	1.00		4.00	MTR	Sipna	Semadoh (Semadoh Checkpost)	Makhla	Semadoh	178	N२१ ३० ०५.१७	E ०७७ १९ ८७.१८
	Check Post	1.00		4.00	MTR	Sipna	Semadoh (Baramanda Checkpost)	Kolkas	Kolkas	149	N२१ ३० ५३.३७	E ०७७ १२ ०४.१६
	Check Post	1.00		5.00	MTR	Sipna	Raipur (Kuvapati Checkpost)	S. Raipur	Daitkahu	233	N21 '32'17.1	E 077'15'28.6
	Gadga Gate	1.00		2.00	MTR	Sipna	Semadoh (Gadga Gate)	Kolkas	W. Pili	152	N21 '50'19.19	E 077 '22' 76.36"
	Check Naka	1.00		2.10	MTR	Sipna	Jarida (Panchadogri Naka)	M. Khandukheda	Khandukheda	309	N21 35 08.39	E 07729 31.95
	Watch Tower	1.00		0.15	MTR	Sipna	Raipur (Permanent Structure)(watchtower)	W.Chunkhadi	E. Raipur	220	N21 '35'20"	E 077'18'52"
	Watch Tower	1.00		0.15	MTR	Sipna	Raipur (Permanent Structure)(watchtower)	Bodpadav	W. Bod	240	N21 '32'08"	E 077'13'05"
	Watch Tower	1.00		2.50	MTR	Sipna	Raipur (New)	N. Raipur	Borathakheda	257	N21 '36'59.0"	E 077'15'41.90"
	Watch Tower	1.00		0.15	MTR	Sipna	Semadoh (Bhopla Balla) (Watchtower)	Kolkas	Kolkas	149	N21 '51'03.98"	E 077 '20'.99.10"
	Watch Tower	1.00		0.15	MTR	Sipna	Semadoh (Khilafata)(Watchtower)	Pili	Pili	121	N21 '28'43.76"	E 077 '15'48.32"
	Watch Tower	1.00		0.15	MTR	Sipna	Semadoh (Halduballa)(Watchtower)	Semadoh	Haldu Kheda	104	N21 '47'92.31"	E 077 '31' 23.39"
	Watch Tower	1.00		0.15	MTR	Sipna	Semadoh (Wasrudeo)(Watchtower)	Talia	Makhla	187	N21 '56'07.33"	E 077 '36' 64.48"
	Watch Tower	1.00		2.30	MTR	Sipna	Jarida (Halduballa)(Watchtower)	M. Marita	Mheriaam	325	N21 '64'41.93"	E 077 '40' 86.12"
	Watch Tower	1.00		2.30	MTR	Sipna	Jarida (Jamunballa)(Watchtower)	M. Khandukheda	Khandukheda	309	N21 34 59	E 077 28 52
	Watch Tower	1.00		2.30	MTR	Sipna	Jarida (Dhavdakhera) (Watchtower)	N. Bharugavan	Jarida	402	N21 67 07.99	E 077 47 15.17

.	Works proposed				Location of work						Latlong	
Rule No.	Item of work	Quantity	Rate	Amount (Rs. in Lakhs	Circle	Division	Range	Round	Beat	Compartment No	Latitude	Longitude
1	**2**	**3**	**4**	**5**	**6**	**7**	**8**	**9**	**10**	**11**	**12**	**13**
	Watch Tower	1.00		2.30	MTR	Sipna	Hatru (Watch Tower) Suryadeoballa	Retyakheda	Retyakheda	535	N21 38' 31.54"	E 077 14'54.80"
	Watch Tower	1.00		2.30	MTR	Sipna	Chourakund (Watch Tower) Fofaswadi	N. Chourakund	Chourakund	588	N21 37' 33"	E 077 6' 49"
		19.00		**40.00**	**MTR**	**Sipna**						
	Construction of flush causway	5.00		15.00	MTR	Gugamal	Gugamal	Harisal	Harisal	Shevarimunda	N 21 34 16	E 077 06 42
	Construction of flush causway	5.00		15.00	MTR	Gugamal	Gugamal	Harisal	S. Anjanzadap	N. Mangiya	N 21 34 38.24	E 077 10 53.58
	Construction of flush causway	2.00		10.00	MTR	Gugamal	Chikhaldara	Vairat	kalukundi	789	N 21 35 60 07	E 077 21 41 45
	Construction of flush causway	2.00		10.00	MTR	Gugamal	Chikhaldara	Chikhaldara	memna	109	N21 25 51 62	E077 18 05 33
		14.00		**50.00**	**MTR**	**Gugamal**						
	Construction of flush causway	2.00		10.00	MTR	Akot	Wan	Nagartas	N.Nagartas	1257	N 21. 20. 91. 21	E 076. 81. 35. 48
	Construction of flush causway	2.00		10.00	MTR	Akot	Wan	Talai	N. Talai	1244	N 21 14 10	E 076 47 39
	Construction of flush causway	2.00		10.00	MTR	Akot	Somthana	Borwa	W Borwa	1084	N 21 13 06 50	E 76 53 06 79
	Construction of flush causway	2.00		10.00	MTR	Akot	Dhargad	Gullarghat	E Dhargad	1014	N 21.256883	E 77.011725
	Construction of flush causway	2.00		10.00	MTR	Akot	Wan	Talai	Wan	1253	N 21 13 55	E 076 46 55
		10.00		**50.00**	**MTR**	**Akot**						
		62.00		**160.00**								
	Total of 5(3)(d)	**743.13**		**394.77**								
5(3)(e)	**Construction of residential and official buildings in forests for front line staffs deployed for protection of forest and wildlife**											
i	**Construction of Type I Quarters**											
	Const. of Type I Quarter	1	22.00	22.00	MTR	Sipna	Chaurakund	Rangubeli	W Khamda	673	N 21 41.41	E 077 4.20
		1	22.00	22.00	MTR	Sipna	Jarida	Chunkhadi	W Khandukheda	292	N 21 34 30.41	E 077 24 54.55
		1	22.00	22.00	MTR	Gugamal	Tarubanda	Adhav	Adhav	-	N-21'28'43.62"	E-077'07'25.07
		1	22.00	22.00	MTR	Gugamal	Dhakaa	Borikhada	Ranamalur	734	N 21 30 51.52	E 077 02 03.08
		1	22.00	22.00	MTR	Akot	Wan	Nagartas	Wari	C-1	21:8'51"	76:45'26"
		1	22.00	22.00	MTR	Akot	Wan	Nagartas	N.Nagartas	1257	21:217075	76:821092
		1	22.00	22.00	MTR	Pandharkawada	Parwa	-	-	Headquarter	N 19 59 30 87	E 78 20 52 14
		1	22.00	22.00	MTR	Pandharkawada	Parwa	-	-	Headquarter	N 19 59 29 70	E 78 20 52 02
	Sub Total	**8**		**176.00**								
ii	**Construction of Type II Quarters**											

.	Works proposed				Location of work						Latlong	
Rule No.	Item of work	Quantity	Rate	Amount (Rs. in Lakhs	Circle	Division	Range	Round	Beat	Compartment No	Latitude	Longitude
1	**2**	**3**	**4**	**5**	**6**	**7**	**8**	**9**	**10**	**11**	**12**	**13**
	Const. of Type IIQuarter	1	26.00	26.00	MTR	Sipna	Jarida	Chunkhadi	W Khandukheda	292	N 21 34 49.32	E 077 27 11.74
		1	26.00	26.00	MTR	Gugamal	Harisal	S.Anjanzadap	Malur	614	N-21'35'41.01"	E-077'08'53.00
		1	26.00	26.00	MTR	Akola	Buldhana	Warwand		-	76 27 78.43	20 52 14.18
		1	26.00	26.00	MTR	Pandharkawada	Parwa	-	-	Headquarter	N 19 59 30 33	E 78 20 53 30
	Total	**4**		**104.00**								
iii	**Construction of Type III Quarters**											
	Const. of Type IIIQuarter	1	36.00	36.00	MTR	Sipna	Semadoh	Semadoh	Aseri	169	N 21 30 11.87	E 077 19 11.50
		1	36.00	36.00	MTR	Akot	Wan	Nagartas	N.Nagartas	1257	21:217066	76:82123
		1	36.00	36.00	MTR	Pandharkawada	Parwa	-	-	Headquarter	N 19 59 29 89	E 78 20 54 14
	Total	**3**		**108.00**								
iv	**Construction of Range Office**											
	RFO Hatru office	1	45.00	45.00	MTR	Sipna	Hatru	S Hatru	Chilati	473	N 21 41 02.09	E 077 20 10.04
		1	45.00	45.00	MTR	Pandharkawada	Parwa	-	-	Headquarter	N 19 59 30 29	E 78 20 54 74
	Total	**2**		**90.00**								
	Total 5(3)(e) of Construction and Repairing work	**17**		**478.00**								
5(3)(f)(ii)	Casual engagement of local people or labours to assist regular staff of State Forest Department for works for protection of forest and wildlife undertaken from State Fund (Mission Melghat)			45.00	MTR	Melghat WL Dn.						
				45.00	MTR	Sipna						
				45.00	MTR	Gugamal						
				35.00	MTR	Akot						
		0.00		**170.00**								
	Construction, up-gradation and maintenance of Inspection paths/Forest roads in forest area/flush causway/watch towers /Check posts/Check Naka (Mission Melghat)			2.00	MTR	Melghat WL Dn.						
				2.00	MTR	Sipna						
				2.00	MTR	Gugamal						
				2.00	MTR	Akot						
				2.00	MTR	Akola						
				2.00	MTR	Pandharkawada						
		0.00		**12.00**								
	Total for works under not more than 20% component			**1054.77**								
	Grand totoal of APO			**4100.07**								

ANNUAL PLAN OF OPERATIONS 2022-23												
FORMAT VII A---- Forestry and other activities proposed under Net Present Value amount (Please see Rule no. 5(2), 5(3), and proviso under Rule 5(3) (NPV - 04)												
Mumbai West Wildlife Circle												
Works proposed					**Location of work**						**Latlong**	
Rule No.	**Item of work**	**Quantity**	**Rate**	**Amount (Rs. in Lakhs**	**Circle**	**Division**	**Range**	**Round**	**Beat**	**Compartment No**	**Latitude**	**Longitude**
1	2	3	4	5	6	7	8	9	10	11	12	13
5 (2)	**Works under Not less than 80 % component (Rule 5 (2))**										---	
5(2)(d)	**Protection of plantations and forests**										---	
i	Encroachment Removal & Forest Protection	1		10.00	**APCCF (WL) WEST MUMBAI**	**SGNP**	SGNP-Tulsi	All Rounds	All Beats	---		
		L.S.	L.S.	5.00	**APCCF (WL) WEST MUMBAI**	**THANE**	Parali	All Rounds	pachghar, satronda ,kevnala, ogada east, ogada west, khodada north ,khodada south ,surymal east, surymal west, amala, vashind ,gomghar ,savarda south ,savarda north, kashti south ,kashti north.	522,523,524,525,526,527,528,529,530,531, 532,533,534,535,544,545,546,547,548,549, 550,551,552,553,554,555,556,557.	N 19 74342 N 19 789446	E 73 347174 E 73 393144
		1.00		**15.00**								
ii	**Survey Demarcation & Fencing at Forest Sensitive Areas**											
	Chainlink Fencing	400 m	0.025 m	10.00	**APCCF (WL) WEST MUMBAI**	**PUNE**	Mayureshwar Supe	Supe	Supe-2	774	N 18.20.19.9	E 74.21.91.7
	Chainlink Fencing	200 m	0.035 m	7.00	**APCCF (WL) WEST MUMBAI**	**PUNE**	Bhimashankar Wildlife Sanctuary No.02	Naravali	Dongernave	756	N 19 13 67	E 73 49 36
	Survey and Demarcation forest area in Buffer Villages	Ls	-	5.00	**APCCF (WL) WEST MUMBAI**	**KOLHAPUR- Karad**	Bamnoli	Met Indoli	Munavale	---	N 17º42′42″	E 73º46′17″
		0.00		**22.00**								

ANNUAL PLAN OF OPERATIONS 2022-23

FORMAT VII A---- Forestry and other activities proposed under Net Present Value amount (Please see Rule no. 5(2), 5(3), and proviso under Rule 5(3) (NPV - 04)

Mumbai West Wildlife Circle

Works proposed					Location of work						Latlong	
Rule No.	**Item of work**	**Quantity**	**Rate**	**Amount (Rs. in Lakhs**	**Circle**	**Division**	**Range**	**Round**	**Beat**	**Compartment No**	**Latitude**	**Longitude**
1	2	3	4	5	6	7	8	9	10	11	12	13
iii	Construction of Boundary Pillars	150	0.04	6.00	**APCCF (WL) WEST MUMBAI**	**THANE**	Vaitrana	Timal, Dhandra, Kalambha, Moj, Pendhari	All Beats	542,543,59,54 1,540,537,538, 539,519,520,5 21,536,935,93 6,937,938,939, 932,931,926,6 27,923,925,92 2,924,941,942, 934,940,930,9 33	N 19 69 677 N 19 69 431 N 19 69 530 N 19 42 580 N 19 42 436 N 19 42 390 N 19 36 465 N 19 36 490 N 19 36 988 N 19 37 813	E 73 31 716 E 73 31 679 E 73 31 702 E 73 14 946 E 73 14 716 E 73 14 543 E 73 13 792 E 73 13 802 E 73 15 831 E 73 15 720
		200	0.04	8.00	**APCCF (WL) WEST MUMBAI**	**THANE**	Parali	All Rounds	pachghar, satronda ,kevnala, ogada east, ogada west, khodada north ,khodada south ,surymal east, surymal west, amala, vashind ,gomghar ,savarda south ,savarda north, kashti south ,kashti north.	522,523,524,5 25,526,527,52 8,529,530,531, 532,533,534,5 35,544,545,54 6,547,548,549, 550,551,552,5 53,554,555,55 6,557.	N 19 74342 N 19 789446	E 73 347174 E 73 393144
		150	0.04	6.00	**APCCF (WL) WEST MUMBAI**	**THANE**	Khardi	Khardi, Shahapur, Asangaon, Bendekon	---	569 to 575, 880,8882 to 884, 889, 890, 894, 896 to 900, 945 to 950, 955 to 957, 959 to 961, 966, 967	N19' 45 75 N19' 36.28	E073' 29.88. E073' 20.11
		100	0.04	4.00	**APCCF (WL) WEST MUMBAI**	**THANE**	Tansa	Kalamgaon	Tanshet	967	N 19.33.68319	E 073.21.160
		600.00		**24.00**								

ANNUAL PLAN OF OPERATIONS 2022-23

FORMAT VII A---- Forestry and other activities proposed under Net Present Value amount (Please see Rule no. 5(2), 5(3), and proviso under Rule 5(3) (NPV - 04)

Mumbai West Wildlife Circle

Works proposed					**Location of work**						**Latlong**	
Rule No.	**Item of work**	**Quantity**	**Rate**	**Amount (Rs. in Lakhs**	**Circle**	**Division**	**Range**	**Round**	**Beat**	**Compartment No**	**Latitude**	**Longitude**
1	2	3	4	5	6	7	8	9	10	11	12	13
v	Construction , Upgradation and Maintenance of Protection Camps/Forest Custody/Labour Shed etc.											
	Protection camps/Protection Huts	1	20	20.00	**APCCF (WL) WEST MUMBAI**	**SGNP**	Yeur	Yeur	Yeur West	---	N 19.13.2987	E 72.56.3014
		1	20	20.00	**APCCF (WL) WEST MUMBAI**	**SGNP**	Yeur	Nagla	Nagla	---	N 19.18.5659	E 72.56.1933
		1	20	20.00	**APCCF (WL) WEST MUMBAI**	**SGNP**	Tungareshwar (N)	Majivali	Parol	---	N 19.27.3801	E 72.56.0997
		1	20	20.00	**APCCF (WL) WEST MUMBAI**	**SGNP**	Tungareshwar (S)	All Rounds	All Beats	---	N 18.21.3784	E 72.55.5621
		2	20	40.00	**APCCF (WL) WEST MUMBAI**	**THANE**	Parali	All Rounds	All Beats	---	N 19 789446	E 73 393144
		2	20	40.00	**APCCF (WL) WEST MUMBAI**	**THANE**	Parali Range	Parali Range	Amla Pachghar	546 528	N 19 711635 N 19 44 34	E 73 233117 E 73 17 36
		1	20	20.00	**APCCF (WL) WEST MUMBAI**	**PUNE**	Bhimashankar Wildlife Sanctuary No.01	Bhimashanakr	Nigdale-2	201A	N 19.0426.8	E 73.3218.0
		1	20	20.00	**APCCF (WL) WEST MUMBAI**	**PUNE**		Bhimashanakr	Ghatghar	130	N 19.0832.2	E 73.3326.3
		2	20	40.00	**APCCF (WL) WEST MUMBAI**	**NASHIK**	Jamnya	Langda amba	Langda amba 1 Langda amba 3	1,26,134	N 21 21 310 N21 22 055	E075 38 502 E075 36 186
		1	20	20.00	**APCCF (WL) WEST MUMBAI**	**NASHIK**	Pal	Garbardi	Lohara	32/38/39	N 21 16 33	E075 53 58
	Labour Shed	2	6.00	12.00	**APCCF (WL) WEST MUMBAI**	**PUNE**	Mirajgaon	Mirajgaon	Chincoli Kaldat	402/72	N 18.6254 N 18.462	E 74.557 E 75.0276
		15		**272.00**								

ANNUAL PLAN OF OPERATIONS 2022-23												
FORMAT VII A---- Forestry and other activities proposed under Net Present Value amount (Please see Rule no. 5(2), 5(3), and proviso under Rule 5(3) (NPV - 04)												
Mumbai West Wildlife Circle												
Works proposed					**Location of work**						**Latlong**	
Rule No.	**Item of work**	**Quantity**	**Rate**	**Amount (Rs. in Lakhs**	**Circle**	**Division**	**Range**	**Round**	**Beat**	**Compartment No**	**Latitude**	**Longitude**
1	2	3	4	5	6	7	8	9	10	11	12	13
vi	Estabhishment and maintenance of wireless networks	L.S.	L.S.	15.00	**APCCF (WL) WEST MUMBAI**	**SGNP**	Tungareshwar North & South	All Rounds	All Beats	--	---	
		1	5.00	5.00	**APCCF (WL) WEST MUMBAI**	**KOLHAPUR-Karad**	Radhanagri, Dajipur				N 16º44'25.27"	E 73º93'31.78"
		1	10.00	10.00	**APCCF (WL) WEST MUMBAI**	**KOLHAPUR-CNP Karad**	Chandoli, Helwak Dhebewadi	CNP	CNP	---	N 17.23.10.08	E 73.46.0.16
		1	L.S.	2.00	**APCCF (WL) WEST MUMBAI**	**NASHIK**	Jamnya	--	--	--	---	
		2	L.S.	1.00	**APCCF (WL) WEST MUMBAI**	**NASHIK**	Pal	--	--	--	---	
		1	25.00	25.00	**APCCF (WL) WEST MUMBAI**	**AURANGABAD**	Kannad	Gautala Autramghat Willife Sanctuary				
		6.00		**58.00**								
vii	Improving Mobility of Frontline Staff by Providing Vehicles for Forest Protection & Patroling	LS		2.00	**APCCF (WL) WEST MUMBAI**	**SGNP**						
		LS		2.00	**APCCF (WL) WEST MUMBAI**	**THANE**						
		LS		2.00	**APCCF (WL) WEST MUMBAI**	**PUNE**						
		LS		2.00	**APCCF (WL) WEST MUMBAI**	**KOLHAPUR-Karad**						
		LS		2.00	**APCCF (WL) WEST MUMBAI**	**NASHIK**						
		LS		2.00	**APCCF (WL) WEST MUMBAI**	**AURANGABAD**						
		0.00		**12.00**								
5(2)(d)	**TOTAL of Protection of plantations and forests**	**622.00**		**403.00**						---	---	

ANNUAL PLAN OF OPERATIONS 2022-23

FORMAT VII A---- Forestry and other activities proposed under Net Present Value amount (Please see Rule no. 5(2), 5(3), and proviso under Rule 5(3) (NPV - 04)

Mumbai West Wildlife Circle

Works proposed					Location of work						Latlong	
Rule No.	**Item of work**	**Quantity**	**Rate**	**Amount (Rs. in Lakhs**	**Circle**	**Division**	**Range**	**Round**	**Beat**	**Compartment No**	**Latitude**	**Longitude**
1	2	3	4	5	6	7	8	9	10	11	12	13
5 (2)(f)	**Forest Fire Prevention and Control Operations**										---	
i	Cutting and Buring of Fire Lines	60 km 12 m width 25 km 6 m width	6396 rs per km for 12 m width 4794 rs per km for 6 m width	5.00	**APCCF (WL) WEST MUMBAI**	**SGNP**	Yeur	All Rounds	All Beats	---	---	
		60 km 12 m width 25 km 6 m width	6396 rs per km for 12 m width 4794 rs per km for 6 m width	5.00	**APCCF (WL) WEST MUMBAI**	**SGNP**	Tungareshwar (N)	All Rounds	All Beats	---	---	
		60 km 12 m width 25 km 6 m width	6396 rs per km for 12 m width 4794 rs per km for 6 m width	5.00	**APCCF (WL) WEST MUMBAI**	**SGNP**	Tungareshwar (S)	All Rounds	All Beats	---	---	
		133 k.m	0.015	2.00	**APCCF (WL) WEST MUMBAI**	**THANE**	Vaitrana Range	Timal, Dhandra, Kalambha, Moj, Pendhari	---	---	N 19 61 0018 N 19 19 0098 N 19 61 1226 N 19 68 7661 N 19 68 5005	E 73 20 7271 E 73 20 7738 E 73 20 5179 E 73 28 2294 E 73 28 9947
		133 k.m.	0.015	2.00	**APCCF (WL) WEST MUMBAI**	**THANE**	Parali	All Rounds	---	---	N 19 74342 N 19 789446	E 73 347174 E 73 393144
		133 k.m.	0.015	2.00	**APCCF (WL) WEST MUMBAI**	**THANE**	Khardi	Khardi, Shahapur, Asangaon, Bendekon, Borala	18 Beats	40	N19' 45 75.29	E073' 29.88.33
		0.00		**21.00**								
ii	Fire Watchers	1251 MD	399.73 Rs per MD	5.00	**APCCF (WL) WEST MUMBAI**	**SGNP**	Yeur	All Rounds	All Beats	---	---	
		1251 MD	399.73 Rs per MD	5.00	**APCCF (WL) WEST MUMBAI**	**SGNP**	Tungareshwar (N)	All Rounds	All Beats	---	---	
		1251 MD	399.73 Rs per MD	5.00	**APCCF (WL) WEST MUMBAI**	**SGNP**	Tungareshwar (S)	All Rounds	All Beats	---	---	

ANNUAL PLAN OF OPERATIONS 2022-23

FORMAT VII A---- Forestry and other activities proposed under Net Present Value amount (Please see Rule no. 5(2), 5(3), and proviso under Rule 5(3) (NPV - 04)

Mumbai West Wildlife Circle

Works proposed					Location of work						Latlong	
Rule No.	**Item of work**	**Quantity**	**Rate**	**Amount (Rs. in Lakhs**	**Circle**	**Division**	**Range**	**Round**	**Beat**	**Compartment No**	**Latitude**	**Longitude**
1	2	3	4	5	6	7	8	9	10	11	12	13
ii	Fire Watchers	15	0.70	10.50	**APCCF (WL) WEST MUMBAI**	**THANE**	Vaitrana Range	Timal, Dhandra, Kalambha, Moj, Pendhari	---	---	N 19 38 3511 N 19 19 0098 N 19 61 1226 N 19 68 7661 N 19 68 5005	E 73 16 4638 E 73 20 7738 E 73 20 5179 E 73 28 2294 E 73 28 9947
		15	0.70	10.50	**APCCF (WL) WEST MUMBAI**	**THANE**	Parali	All Rounds	---	---	N 19 74342 N 19 789446	E 73 347174 E 73 393144
		15	0.70	10.50	**APCCF (WL) WEST MUMBAI**	**THANE**	Khardi	Khardi, Shahapur, Asangaon, Bendekon, Borala	---	---	N19' 28 54.3	E073' 16 49.3
		2280 mandays	0.0045 m.d.	10.26	**APCCF (WL) WEST MUMBAI**	**KOLHAPUR-Karad**	CNP Karad	Chandolo, Helwak, Dhebewadi	CNP	CNP	---	
		15	0.11	6.54	**APCCF (WL) WEST MUMBAI**	**NASHIK**	Rajur	All	All	--	--	
		15	0.11	6.54	**APCCF (WL) WEST MUMBAI**	**NASHIK**	Bhandardara	All	All	--	--	
		10	0.011	4.36	**APCCF (WL) WEST MUMBAI**	**NASHIK**	Jamnya	All	All	--	--	
		10	0.011	4.36	**APCCF (WL) WEST MUMBAI**	**NASHIK**	Pal	All	All	--	--	
		10	0.011	4.36	**APCCF (WL) WEST MUMBAI**	**NASHIK**	Shirpur	All	All	--	--	
	Fire watchers	**105.00**		**82.92**								
5(2)(f)	**Total for Forest fire prevention and control operations**	**105.00**		**103.92**						--	--	
	Total for Forest Protection	**727.00**		**506.92**						**--**	**--**	

ANNUAL PLAN OF OPERATIONS 2022-23												
FORMAT VII A---- Forestry and other activities proposed under Net Present Value amount (Please see Rule no. 5(2), 5(3), and proviso under Rule 5(3) (NPV - 04)												
Mumbai West Wildlife Circle												
Works proposed					**Location of work**						**Latlong**	
Rule No.	**Item of work**	**Quantity**	**Rate**	**Amount (Rs. in Lakhs**	**Circle**	**Division**	**Range**	**Round**	**Beat**	**Compartment No**	**Latitude**	**Longitude**
1	2	3	4	5	6	7	8	9	10	11	12	13
5(2) (g)	**Soil and moisture conservation works in the forest**									---	---	
i	Gabian Structure	50	0.50	25.00	**APCCF (WL) WEST MUMBAI**	**THANE**	Khardi	Khardi, Shahapur, Asangaon, Bendekon, Borala	---		N19' 45 120 N19' 36.360	E073' 33 101 E073' 20. 50
ii	construction of cement Bhandara	1	15.00	15.00	**APCCF (WL) WEST MUMBAI**	**PUNE**	Bhimashankar Wildlife Sanctuary No.03	Naravali	Jamburde	753	N 19.09.087	E 73.30.043
		1	15.00	15.00	**APCCF (WL) WEST MUMBAI**	**PUNE**	Bhimashankar Wildlife Sanctuary No.04	Naravali	Dongernave	756	N 19.00	E **073.00**
		1	15.00	15.00	**APCCF (WL) WEST MUMBAI**	**PUNE**	Bhimashankar Wildlife Sanctuary No.07	Khandas	Nandgaon	9B	N 19.09.863	E / 73.51.578
		4	15.00	60.00	**APCCF (WL) WEST MUMBAI**	**NASHIK**	Jamnya	Langda amba	L.amba 1/2 Gadra1/2	122,128, 113, 112	N 21 22 110 N 21 22 393 N 21 22 011	E 075 40 96 E075 45 239 E 075 44 137
		1	15.00	15.00	**APCCF (WL) WEST MUMBAI**	**NASHIK**	Pal	Mohmandli	Nimdya	52	N 21 21 573	E 075 53 627
iii	Check Dam	10	0.45	4.50	**APCCF (WL) WEST MUMBAI**	**THANE**	Khardi	Khardi, Shahapur, Asangaon, Bendekon, Borala	---		N19' 45 75 N19' 36.28	E073' 29.88. E073' 20.11
5(2) (g)	**TOTAL of Soil and moisture conservation works in the forest**	**68.00**		**149.50**						--	--	

ANNUAL PLAN OF OPERATIONS 2022-23

FORMAT VII A---- Forestry and other activities proposed under Net Present Value amount (Please see Rule no. 5(2), 5(3), and proviso under Rule 5(3) (NPV - 04)

Mumbai West Wildlife Circle

Works proposed					Location of work						Latlong	
Rule No.	**Item of work**	**Quantity**	**Rate**	**Amount (Rs. in Lakhs**	**Circle**	**Division**	**Range**	**Round**	**Beat**	**Compartment No**	**Latitude**	**Longitude**
1	2	3	4	5	6	7	8	9	10	11	12	13
5(2)(i)	**Improvement of Wildlife Habitat as provided in the approved wildlife management plan or working plan**										--	
i	Meadow Development, Weed Removal & Habitat Improvement	4		8.00	**APCCF (WL) WEST MUMBAI**	**KOLHAPUR -Karad**	Bamnoli	Vele	Dewoor	372	N 17º37′19″	E 73º48′13″
		15			**APCCF (WL) WEST MUMBAI**	**KOLHAPUR -Karad**	Bamnoli	Vele	Dewoor	380	N 17º35′41″	E 73º46′40″
		15			**APCCF (WL) WEST MUMBAI**	**KOLHAPUR -Karad**	Bamnoli	Vele	Dewoor	370	N 17º37′05″	E 73º46′52″
		15			**APCCF (WL) WEST MUMBAI**	**KOLHAPUR -Karad**	Bamnoli	Vele	Dewoor	370	N 17º37′05″	E 73º46′52″
		10			**APCCF (WL) WEST MUMBAI**	**KOLHAPUR -Karad**	Bamnoli	Waghvale	Pimpri	301355	N 17º44′25″	E 73º41′10″
		5			**APCCF (WL) WEST MUMBAI**	**KOLHAPUR -Karad**	Bamnoli	Waghvale	Uchat	367	N 17º45′39.1″	E 73º37′16.9″
		5			**APCCF (WL) WEST MUMBAI**	**KOLHAPUR -Karad**	Bamnoli	Waghvale	Waghavale	357	N 17º45.63.8	E 73º39.656
		20			**APCCF (WL) WEST MUMBAI**	**KOLHAPUR -Karad**	Bamnoli	Met Indoli	Kusapur	331B,332	N 17º40′18″	E 73º44.56′
		5			**APCCF (WL) WEST MUMBAI**	**KOLHAPUR -Karad**	Bamnoli	Met Indoli	Khirkhindi	335	N 17º40′18.5″	E 73º42"44.3′
		5			**APCCF (WL) WEST MUMBAI**	**KOLHAPUR -Karad**	Bamnoli	Met Indoli	Munavale	322	N 17º40′47″	E 73º46"34′

ANNUAL PLAN OF OPERATIONS 2022-23

FORMAT VII A---- Forestry and other activities proposed under Net Present Value amount (Please see Rule no. 5(2), 5(3), and proviso under Rule 5(3) (NPV - 04)

Mumbai West Wildlife Circle

Works proposed					Location of work						Latlong	
Rule No.	**Item of work**	**Quantity**	**Rate**	**Amount (Rs. in Lakhs**	**Circle**	**Division**	**Range**	**Round**	**Beat**	**Compartment No**	**Latitude**	**Longitude**
1	2	3	4	5	6	7	8	9	10	11	12	13
i	Meadow Development, Weed Removal & Habitat Improvement	10		8.00	**APCCF (WL) WEST MUMBAI**	**KOLHAPUR -Karad**	Koyana	Shrishinge	Kisrul	414	N 17º28′55.0362″	E 73º44′36.48″
		15			**APCCF (WL) WEST MUMBAI**	**KOLHAPUR -Karad**	Koyana		Kisrul	411	N 17º28′30.90″	E 73º46′2.05″
		40			**APCCF (WL) WEST MUMBAI**	**KOLHAPUR -Karad**	Koyana		Dicholi,	Dicholi Gavthan	N 17º30′29.42″	E 73º44′41.05″
		25			**APCCF (WL) WEST MUMBAI**	**KOLHAPUR -Karad**	Koyana		Shrishinge	405	N 17º42'29.05″	E 73º36'24.11″
		5			**APCCF (WL) WEST MUMBAI**	**KOLHAPUR -Karad**	Koyana	Takvali	Takvali	369	N 17º36′16.00″	E 73º43′35.47″
		20	0.04 h.a.	0.8	**APCCF (WL) WEST MUMBAI**	**KOLHAPUR -Karad**	Dhebewadi	Sanbur	Paneri, Aatoli	574, 524	N17°14'59" N17°17'42"	E073°48'09 " E073°45'09 "
		175	0.04/ha.	7.00	**APCCF (WL) WEST MUMBAI**	**KOLHAPUR -Karad**	Chandoli	Nivale Kop	Sonarli Dhakale Nivale kop.	29,33,32	N17°5'58.26" N17°13'637" N17°11'32"	E073°46'11.78" E073°7'7.06 " E073°29'8 .63"
		175	0.04/ha.	7.00	**APCCF (WL) WEST MUMBAI**	**KOLHAPUR -Karad**	Chandoli	Mandur	Vetti,Takale ,Nandoli	16,19,23	N17°14'1.4" N17°20'34.6" N17°40'45.2"	E073°45'44.7" E073°2'9'17.9 " E073°50' 36.9"
		7	0.04/ha.	0.28	**APCCF (WL) WEST MUMBAI**	**KOLHAPUR -Karad**	helwak	helwak	waghane	480	N17°21'39.2"	E073°45'14.3 "
		571.00		**31.08**								

ANNUAL PLAN OF OPERATIONS 2022-23

FORMAT VII A---- Forestry and other activities proposed under Net Present Value amount (Please see Rule no. 5(2), 5(3), and proviso under Rule 5(3) (NPV - 04)

Mumbai West Wildlife Circle

Works proposed					Location of work						Latlong	
Rule No.	**Item of work**	**Quantity**	**Rate**	**Amount (Rs. in Lakhs**	**Circle**	**Division**	**Range**	**Round**	**Beat**	**Compartment No**	**Latitude**	**Longitude**
1	2	3	4	5	6	7	8	9	10	11	12	13
5(2)[c]	Fodder Development (PPO)	10	---	2.04	**APCCF (WL) West**	**NASHIK**	Rajur		Ambit	1,14,117	---	
		10	---	2.04	**APCCF (WL) West**	**NASHIK**	Bhandardara		Uddawane	60,61	---	
		18	---	3.51	**APCCF (WL) West**	**NASHIK**	Shirpur		Hisale	1031	---	
		18	---	3.66	**APCCF (WL) West**	**NASHIK**	Pal		Gardaridi 1	28,29	---	
		18	---	3.66	**APCCF (WL) West**	**NASHIK**	Jamnya		Landa amba1 2	122,125, 128,129	---	
		74	**0**	**14.91**								
5(2)[c]	Fodder Development (FYO)	10	---	0.28	**APCCF (WL) West**	**NASHIK**	Rajur		Palsunde	1,36,137	N 19 37 02	E73 88 18
		10	---	0.28	**APCCF (WL) West**	**NASHIK**	Bhandardara		Panjare	57,58	N19 59 468	E 73 70 02
		18	---	0.50	**APCCF (WL) West Mumbai**	**NASHIK**	Shirpur		Mahadev donwada	1023	N 21 21 317 N 21 21 153 N 21 21 220	E075 04 977 E 75 04 876 E75 05 584
		18	---	0.50	**APCCF (WL) West**	**NASHIK**	Pal	Pal	Pal	53,54	N 21 22 12	E 075 48 45
		18	---	0.50	**APCCF (WL) West**	**NASHIK**	Jamnya	Usmali	Jamnya 1 2	117,119,118, 121	N21 22 667 N 21 22 418	E075 42 785 E 075 41 482
		74	**0**	**2.06**								
5(2)[c]	Fodder Development (SYO)	23	---	0.18	**APCCF (WL) West Mumbai**	**NASHIK**	Rajur		Pachnai, Tale, Kumshet	651,251,33	N 19 40 2177 N 19 23 883 N19 43 5153	E 73 74 6715 E73 50 331 E73 71 6743
		23	---	0.18	**APCCF (WL) West Mumbai**	**NASHIK**	Bhandardara		Pachnai,Ratan wadi, Ghatghar	54,65,76	N 19 59 46 N 19 30 32	E 73 70 07 E 73 43 24
		10	---	0.08	**APCCF (WL) West Mumbai**	**NASHIK**	Shirpur		Dahiwad	981	N 21 23 178	E074 58 812
		9	---	0.07	**APCCF (WL) West Mumbai**	**NASHIK**	Pal	Mohmandly	Mohmandly 2	63,64	N 21 21 35 N 21 20 40	E075 48 48 E 075 49 5
		9	---	0.07	**APCCF (WL) West Mumbai**	**NASHIK**	Jamnya	Gadry	Gadry	114	N 23 23 60	E075 44 35
		74	**0**	**0.58**								

ANNUAL PLAN OF OPERATIONS 2022-23

FORMAT VII A---- Forestry and other activities proposed under Net Present Value amount (Please see Rule no. 5(2), 5(3), and proviso under Rule 5(3) (NPV - 04)

Mumbai West Wildlife Circle

Works proposed					Location of work						Latlong	
Rule No.	**Item of work**	**Quantity**	**Rate**	**Amount (Rs. in Lakhs**	**Circle**	**Division**	**Range**	**Round**	**Beat**	**Compartment No**	**Latitude**	**Longitude**
1	2	3	4	5	6	7	8	9	10	11	12	13
5(2)[c]	**TOTAL of Silvicultural Operations in Forest**	**793.00**		**48.63**							---	
i	Creation & Maintenance of Water Sources/Water Holes for wildlife	10	1.00	10.00	**APCCF (WL) West Mumbai**	**THANE**	Vaitrana Range	Timal, Dhandra, Kalambha, Moj	Parali, Dhandra, Ghodsakhar, Sagpada West, Moj, Tusa, Pimproli, Bilighar	517,519,521,539,542,931,926,927,923,925	N 19 70 365 N 19 70 671 N 19 42 384 N 19 42 06 N 19 42 41 N 19 37 080 N 19 36 697 N 19 37 053 N 19 37 063 N 19 37 976	E 73 25 470 E 73 16 041 E 73 16 407 E 73 19 09 E 73 19 09 E 73 12 693 E 73 18 178 E 73 13 459 E 73 11 355 E 73 11 815
		10	1.00	10.00	**APCCF (WL) West**	**THANE**	Parali Range	All Rounds	---	---	N 19 74342 N 19 789446	E 73 347174 E 73 393144
		10	0.35	3.50	**APCCF (WL) West Mumbai**	**PUNE.**	Bhimashankar Wildlife Sanctuary No.02	Naravali	Khopivali	774/748/749	N 19.12.303 N 19.15.387	E 73.33.015 E 73.34.137
					APCCF (WL) West Mumbai	**PUNE.**	Bhimashankar Wildlife Sanctuary No.03	Naravali	Naravali	750/751	N 19.18.18	E 73.50.48
					APCCF (WL) West Mumbai	**PUNE.**	Bhimashankar Wildlife Sanctuary No.04	Naravali	Jamburde	752/753	N 19.09.025	E 73.30.449
					APCCF (WL) West Mumbai	**PUNE.**	Bhimashankar Wildlife Sanctuary No.05	Naravali	Dongernave	754/755/750	N 19.07.912 N 19.08.243	E 73.31.667 E 73.31.667
					APCCF (WL) West Mumbai	**PUNE.**	Bhimashankar Wildlife Sanctuary No.06	Khandas	Nandgaon	8A/9A/8B/9B	N 19.11.510	E 53.52.705
					APCCF (WL) West Mumbai	**PUNE.**	Bhimashankar Wildlife Sanctuary No.07	Khandas	Khandas	69/70	N 19.04.986 N 19.05.311 N 19.04.686	E 73.51.734 E 73.51.781 E 73.51.452
		2	2.00	4.00	**APCCF (WL) West**	**PUNE.**	RFO Nannaj	Nannaj	Hiraj	117	N 17.42.22.70	E 75.30.01.10
					APCCF (WL) West	**PUNE.**	RFO Nannaj	Nannaj	Pratapnagar	98	N 17.37.02	E 75.51.10

ANNUAL PLAN OF OPERATIONS 2022-23

FORMAT VII A---- Forestry and other activities proposed under Net Present Value amount (Please see Rule no. 5(2), 5(3), and proviso under Rule 5(3) (NPV - 04)

Mumbai West Wildlife Circle

Works proposed					Location of work						Latlong	
Rule No.	**Item of work**	**Quantity**	**Rate**	**Amount (Rs. in Lakhs**	**Circle**	**Division**	**Range**	**Round**	**Beat**	**Compartment No**	**Latitude**	**Longitude**
1	2	3	4	5	6	7	8	9	10	11	12	13
i	To Supply water to Animals in summer in Waterholes	21	0.10	21.00	**APCCF (WL) West Mumbai**	**PUNE.**	RFO Nannaj	Nannaj	Karmba	117	N 17.47.318	E 75.51.23.9
					APCCF (WL) West Mumbai	**PUNE.**	RFO Nannaj	Nannaj	Mardi	259/290/262/272/275/244/24	N 17.48.58.5	E 75.52.24.1
					APCCF (WL) West Mumbai	**PUNE.**	RFO Nannaj	Nannaj	Akolekati	121	N 17.48.30.6	E 75.51.41.6
					APCCF (WL) West Mumbai	**PUNE.**	RFO Nannaj	Nannaj	Nannaj-1	233/234	N 17.49.38.2	E 75.52.03.05
					APCCF (WL) West Mumbai	**PUNE.**	RFO Nannaj	Nannaj	Nannaj-2	234	N 17.49.41.6	E 75.51.47.3
					APCCF (WL) West Mumbai	**PUNE.**	RFO Nannaj	Nannaj	Gangewadi	55/38	N 17.49.329	E 76.00.41.8
					APCCF (WL) West Mumbai	**PUNE.**	RFO Nannaj	Nannaj	Pimpla	220	N 17.49.467	E 76.01.04.4
					APCCF (WL) West Mumbai	**PUNE.**	RFO Nannaj	Nannaj	Narotewadi	104	N 17.47.42.1	E 75.52.04.7.9
					APCCF (WL) West Mumbai	**PUNE.**	RFO Nannaj	Nannaj	Wadala	318	N 17.47.40.5	E 75.52.07.0
i	To Supply water to Animals in summer in Waterholes	10	0.510	5.10	**APCCF (WL) West Mumbai**	**NASHIK**	shirpur	--	--	--	N21 364 543	E 074 986 063
		3	5	15	**APCCF (WL) West Mumbai**	**NASHIK**	NMS	NMS	NMS	--	--	
		66.00		**68.60**								
i	Improvement of wildlife habitat as provided in the approved wildlife management plan or working plan	3	5	15	**APCCF (WL) West Mumbai**	**NASHIK**	NMS	NMS	NMS	--	--	
		2	4.00	8.00	**APCCF (WL) West Mumbai**		NMS	NMS	NMS	--	--	
		5		0.50	**APCCF (WL) West Mumbai**		Bhandardara			--	--	
		1		5.00	**APCCF (WL) West Mumbai**					--	--	
		L.S.	L.S.	5.00	**APCCF (WL) West Mumbai**	**PUNE.**	RFO Nannaj	Nannaj	Mardi	290	N 17.48.58.5	E 75.52.24.1

ANNUAL PLAN OF OPERATIONS 2022-23

FORMAT VII A---- Forestry and other activities proposed under Net Present Value amount (Please see Rule no. 5(2), 5(3), and proviso under Rule 5(3) (NPV - 04)

Mumbai West Wildlife Circle

Works proposed					Location of work						Latlong	
Rule No.	Item of work	Quantity	Rate	Amount (Rs. in Lakhs	Circle	Division	Range	Round	Beat	Compartment No	Latitude	Longitude
1	2	3	4	5	6	7	8	9	10	11	12	13
i	Removal of unwanted species in meadows (Topli karvi, Lantena weeds spe. Etc.)	60	0.18	10.8	APCCF (WL) West	KOLHAPUR	Radhanagri,	Radhanagari	Radhangari	25	N 16º21'9.781"	E 073º58'36.77"
					APCCF (WL) West	KOLHAPUR	Radhanagri,	Radhanagari	Fejivade	27	N 16º21'42.12"	E 073º56'35.83"
					APCCF (WL) West	KOLHAPUR	Radhanagri,	Radhanagari	Bhndne	23	N 16º20'6.88"	E 073º58'876"
					APCCF (WL) West	KOLHAPUR	Radhanagri,	Aadoli	Sawarde	7	N 16º14'44.1"	E 073º58'552"
					APCCF (WL) West	KOLHAPUR	Radhanagri,	Aadoli	Sawarde	10	N 16º15'3.3"	E 74º02'24"
					APCCF (WL) West	KOLHAPUR	Radhanagri,	Aadoli	Aadoli	5	N 16º14'01"	E 74º02'05"
					APCCF (WL) West	KOLHAPUR	Radhanagri,	Aadoli	Chafodi	1	N 16º19'57"	E 74º1'01"
					APCCF (WL) West	KOLHAPUR	Radhanagri,	Bambharde	Vaki	12	N 16º17'11.4"	E 073º58'49'9'
					APCCF (WL) West	KOLHAPUR	Radhanagri,	Bambharde	Bambarde	17	N 16º15'455"	E' 073º56'42"
					APCCF (WL) West	KOLHAPUR	Radhanagri,	Bambharde	Bambarde	18	N 16º15'52.67"	E 073º53'49.37"
					APCCF (WL) West	KOLHAPUR	Radhanagri,	Bambharde	Konoli	15	N 16º15'46"	E 73º56'59"
					APCCF (WL) West	KOLHAPUR	Radhanagri,	Bambharde	Nidankhan	19	N 16º17'23.26"	E 73º53'37.96"
					APCCF (WL) West	KOLHAPUR	Radhanagri,	Padli	Padli	33	N 16º26'04.86"	E 073º59'17.66"
					APCCF (WL) West	KOLHAPUR	Radhanagri,	Padli	Karivade	36	N 16º25'50.49"	E 073º56'09.59"
					APCCF (WL) West	KOLHAPUR	Dajipur,	Dajipur	Olwan	44	N 16’108687”	E -73.86022”
					APCCF (WL) West	KOLHAPUR	Dajipur,	Dajipur	Manbet South	45	N16’26’03.2”	E 73.52.12.2”
					APCCF (WL) West	KOLHAPUR	Dajipur,	Dajipur	Manbet North	46	N16’26’27.4”	E -73.53.14.2”
					APCCF (WL) West	KOLHAPUR	Dajipur,	Dajipur	Shelap	40	N16’20’13.7”	E 07354.56.8”
					APCCF (WL) West	KOLHAPUR	Dajipur,	Dajipur	Naniwale	21	N 16’20’12.7”	E -073’ 54’54.9”
					APCCF (WL) West	KOLHAPUR	Dajipur,	Dajipur	Hasne East	35	N16’35’63.0”	E 073’ 88’73.2”
					APCCF (WL) West	KOLHAPUR	Dajipur,	Dajipur	Hasne West	50	N 16.327457	E 73.849553
					APCCF (WL) West	KOLHAPUR	Sagareshwar	Sagareshwar	Beat West	10	N 17.153649	E 74.371271
					APCCF (WL) West	KOLHAPUR	Sagareshwar	Sagareshwar	Beat Eest	10	N 17.136962	E 74.388682

ANNUAL PLAN OF OPERATIONS 2022-23												
FORMAT VII A---- Forestry and other activities proposed under Net Present Value amount (Please see Rule no. 5(2), 5(3), and proviso under Rule 5(3) (NPV - 04)												
Mumbai West Wildlife Circle												
Works proposed					Location of work						Latlong	
Rule No.	Item of work	Quantity	Rate	Amount (Rs. in Lakhs	Circle	Division	Range	Round	Beat	Compartment No	Latitude	Longitude
1	2	3	4	5	6	7	8	9	10	11	12	13
i	Removal of unwanted species in meadows (Topli karvi, Lantena weeds spe. Etc.)	4	5.00	20.00	**APCCF (WL) West Mumbai**	**NASHIK**	NMS	NMS	NMS			
		64		**30.8**								
5(2)(i)	**TOTAL of Improvement of Wildlife Habitat**	**923.00**		**148.03**						--	--	
5(2) (k)	**Establishment, operation and maintenance of animal rescue centre and veterinary treatment facilities for wild animals**	1	1.00	1.00	**APCCF (WL) West Mumbai**	**THANE**	Khardi	Asangaon	Mahuli	884		
		1	1.00	1.00	**APCCF (WL) West Mumbai**	**NASHIK**	Pal			--	N 21 21 573	E075 53 627
		2		**2.00**								
iii	Animal seizing devices like camera trap including medicines etc.	25	0.25	6.25	**APCCF (WL) West Mumbai**	**KOLHAPUR**	Radhanagari, Dajipur	--	--	--	--	
		7		8.00	**APCCF (WL) West Mumbai**	**Nashik**						
		32		**14.25**								
	Rescue emergency operations	1		5.00	**APCCF (WL) West Mumbai**	**Nashik**						
5(2) (k)	**TOTAL of Establishment, operation and maintenance of animal rescue centre**	**35**		**21.25**						--	--	
5(2)(l)	**Supply of cook saving cooking appliances and other forest produce saving devices in forest fringe villages as specified by the National Authority from Time to time**	L.S.	L.S.	10.00	**APCCF (WL) West Mumbai**	**THANE**	Parali Range	Parali Range	---	---	---	
	Total for Wildlife Management & Man-animal conflict mitigation			**179.28**						---	---	

ANNUAL PLAN OF OPERATIONS 2022-23												
FORMAT VII A---- Forestry and other activities proposed under Net Present Value amount (Please see Rule no. 5(2), 5(3), and proviso under Rule 5(3) (NPV - 04)												
Mumbai West Wildlife Circle												
Works proposed					Location of work						Latlong	
Rule No.	Item of work	Quantity	Rate	Amount (Rs. in Lakhs	Circle	Division	Range	Round	Beat	Compartment No	Latitude	Longitude
1	2	3	4	5	6	7	8	9	10	11	12	13
5(2)(m)	**Management of Biological Diversity and Biological resource**										---	
iii	Conservation of Wildlife like GIB, Wild Buffalo, Turtle, Vultures, Owl, Sparrow etc. (Vultures)	L.S.	L.S.	5.00	**APCCF (WL) West Mumbai**	**THANE**	Parali Range	Parali Range	---	---	---	
		1		3.00	**APCCF (WL) West Mumbai**	**THANE**	Khardi	Khardi, Asangaon, Borala	Khardi	---	---	
5(2)(m)	**TOTAL of Management of Biological Diversity**			**8.00**							---	
	Grand Total for Activities under not less than 80% component			**843.70**								
5(3) (d)	**Construction, Upgradation and maintenance of inspection paths, forest roads in forest area, fire lines , watch towers, check posts and timber depots**									**---**	**---**	
5(3)(d)	Maintenance of patrolling routes. (Roads)	100 k.m	0.02 k.m.	2.50	**APCCF (WL) West Mumbai**	**KOLHAPUR-CNP Karad**	Chandolo, Helwak, Dhebewadi	CNP	CNP	--	--	
		50 k.m.	0.25 k.m.	12.50	**APCCF (WL) West Mumbai**	**KOLHAPUR-CNP Karad**	Chandolo, Helwak, Dhebewadi	CNP	CNP	--	--	
		150		**15.00**								
	Construction of Watch Tower.	1	10.00	10.00	**APCCF (WL) West Mumbai**	**THANE**	Parali Range	Parali Range	---	---	---	
		1	10.00	10.00	**APCCF (WL) West Mumbai**	**PUNE**	Bhimashankar Wildlife Sanctuary No.02	Naravali	Khopivali	747/748/749	N 19.12.341 N 19.11.944	E 73.32.986 E 73.30.219
		1	10.00	10.00	**APCCF (WL) West Mumbai**	**KOLHAPUR-CNP Karad**	Dhebewadi	Sanbur	Kasani, Atoli	620 571	N17°09'36." N17°17'24."	E073°53'03 E073°44'53 "
		1	10.00	10.00	**APCCF (WL) West Mumbai**	**NASHIK**	Jamnya	Karanjpani Usmali	karanjpani 1 - Jamnya 3	1,37,123	N 21 21 577	E075 40 538
		4		**40.00**								

ANNUAL PLAN OF OPERATIONS 2022-23

FORMAT VII A---- Forestry and other activities proposed under Net Present Value amount (Please see Rule no. 5(2), 5(3), and proviso under Rule 5(3) (NPV - 04)

Mumbai West Wildlife Circle

Works proposed					Location of work						Latlong	
Rule No.	**Item of work**	**Quantity**	**Rate**	**Amount (Rs. in Lakhs**	**Circle**	**Division**	**Range**	**Round**	**Beat**	**Compartment No**	**Latitude**	**Longitude**
1	2	3	4	5	6	7	8	9	10	11	12	13
	Construction of Check Post	1	9.00	9.00	**APCCF (WL) West Mumbai**	**KOLHAPUR-CNP Karad**	Chandoli	Mandur	Mandur	17	N17°09'07"	E073°54'06.35"
		1	9.00	9.00	**APCCF (WL) West Mumbai**	**KOLHAPUR**	Radhanagari	2 Round	2 Beats	---	---	
		1	9	9.00	**APCCF (WL) West Mumbai**	**NASHIK**	Rajur	--	--	--	--	
		1	9	9.00	**APCCF (WL) West Mumbai**	**NASHIK**	Rajur			97	N 19 29 1524	E 73 46 4732
		4		**36.00**								
5(3)(d)	**TOTAL of Construction, Upgradation and maintenance**	**158.00**		**91.00**							--	
5(3) (e)	**Construction of residenctial and official buildings in forests for front line staffs deployed for protection of forest and wildlife**										--	
i	Construction of Type I Quarters	1	22	22.00	**APCCF (WL) West Mumbai**	**SGNP**	Yeur	Yeur	Yeur West	---	N 19.14.2821	E 72.56.1300
		1	22	22.00	**APCCF (WL) West Mumbai**	**SGNP**	Tungareshwar (N)	Sativali	Sativali	---	N 19.24.3371	E 72.53.4411
		2	22	44.00	**APCCF (WL) West Mumbai**	**THANE**	Parali Range	Parali Range	Pachghar Satronda	In Pachghat & Satronda village	N 19 44 847 N 19 44 847	E 73 17 902 E 73 17 902
		1	22	22.00	**APCCF (WL) West Mumbai**	**KOLHAPUR-CNP Karad**	Chandoli	Mandur	Mandur	--	N17°09'09.81" E073°53'06.33"	E073°53'06.33"
		1	22	22.00	**APCCF (WL) West Mumbai**	**NASHIK**	Rajur		Palsunde		N19 24 1107	E 73 54 5529
		1	22	22.00	**APCCF (WL) West Mumbai**	**NASHIK**			Kothale		N 19 24 3442	E 73 49 1070
		2	22	44.00	**APCCF (WL) West Mumbai**	**DFO (WL) AURANGABAD**	Naigaon	naigaon			N 18° 56' 21"	E 85° 36' 00"
		9		**198.00**								

ANNUAL PLAN OF OPERATIONS 2022-23												
FORMAT VII A---- Forestry and other activities proposed under Net Present Value amount (Please see Rule no. 5(2), 5(3), and proviso under Rule 5(3) (NPV - 04)												
Mumbai West Wildlife Circle												
Works proposed					Location of work						Latlong	
Rule No.	Item of work	Quantity	Rate	Amount (Rs. in Lakhs	Circle	Division	Range	Round	Beat	Compartment No	Latitude	Longitude
1	2	3	4	5	6	7	8	9	10	11	12	13
ii	Construction of Type II Quarters	1	26	26.00	**APCCF (WL) West Mumbai**	**SGNP**	Yeur	Yeur	Yeur West	---	N 19.14.0816	E 72.56.1571
		1	26.00	26.00	**APCCF (WL) West Mumbai**	**THANE**	Parali Range	Parali Range	Savarda	In Savarda Village	N 19 789446	E 73 393144
		1	26.00	26.00	**APCCF (WL) West Mumbai**	**PUNE**	Mirajgaon	Mirajgaon	Mirajgaon	393/ 216-1	N 18.7359	E 75.033
		3		**78.00**								
iii	Construction of Type III Quarters	1	36	36.00	**APCCF (WL) West Mumbai**	**SGNP**	Tungareshwar (S)	---	---	---	N 19° 21' 57"	E 72° 53' 40"
		1	36.00	36.00	**APCCF (WL) West Mumbai**	**THANE**	Parali Range	Parali Range	Parali	In Parali village	N 19 74342	E 73 347174
		2		**72.00**								
iv	Construction of Range Office	1	45.00	45.00	**APCCF (WL) West Mumbai**	**SGNP**	Tungareshwar (S)	---	---	---	N 19° 22' 00"	E 72° 53' 40"
		1	45.00	45.00	**APCCF (WL) West Mumbai**	**PUNE**	Bhimashankar Wildlife Sanctuary No 01	Bhimashanakr	Nigdale-2	200A	N 19.0429.4	E 73.3201.5
		2		**90.00**								
v	Amenities for Woman Frontline Staff	1	14.00	14.00	**APCCF (WL) West Mumbai**	**SGNP**	KUB	Magathane	Magathane	---	N 19.13.27727	E 72.52.2207
5(3) (e)	**TOTAL of Construction of residenctial**	**17.00**		**452.00**							--	

ANNUAL PLAN OF OPERATIONS 2022-23												
FORMAT VII A---- Forestry and other activities proposed under Net Present Value amount (Please see Rule no. 5(2), 5(3), and proviso under Rule 5(3) (NPV - 04)												
Mumbai West Wildlife Circle												
Works proposed					**Location of work**						**Latlong**	
Rule No.	**Item of work**	**Quantity**	**Rate**	**Amount (Rs. in Lakhs**	**Circle**	**Division**	**Range**	**Round**	**Beat**	**Compartment No**	**Latitude**	**Longitude**
1	2	3	4	5	6	7	8	9	10	11	12	13
5(3)(i)	Publicity cum awareness programme and exihibition on the various schemes being implemented by the State Authority from state fund	L.S.	L.S.	2.00	**APCCF (WL) West Mumbai**	**SGNP**						
		L.S.	L.S.	2.00	**APCCF (WL) West Mumbai**	**Thane**						
		L.S.	L.S.	2.00	**APCCF (WL) West Mumbai**	**Pune**						
		L.S.	L.S.	2.00	**APCCF (WL) West Mumbai**	**Kolhapur**						
		L.S.	L.S.	2.00	**APCCF (WL) West Mumbai**	**Nashik**						
		L.S.	L.S.	2.00	**APCCF (WL) West Mumbai**	**Aurangabad**						
5(3)(i)	**TOTAL of Publicity cum awareness programme**			**12.00**				---	---	---	---	
	Total for works under not more than 20% component			**555.00**								
	TOTAL FOR NPV			**1398.70**								

ANNUAL PLAN OF OPERATIONS 2022-23												
FORMAT VII A---- Forestry and other activities proposed under Net Present Value amount (Please see Rule no. 5(2), 5(3), and proviso under Rule 5(3) (NPV - 04)												
Research Wing												
Works proposed					Location of work						Latlong	
Rule No.	Item of work	Quantity	Rate	Amount (Rs. in Lakhs	Circle	Division	Range	Round	Beat	Compartment No	Latitude	Longitude
1	2	3	4	5	6	7	8	9	10	11	12	13
5(2)	**Works under Not less than 80 % component (Rule 5 (2))**											
i	**New research projects by research wing of Maharashtra Forest Department**											
1	Grass plantation Project	1 Ha.		3.60	Chandrapur	Chandrapur	RFOR-1	Lohara	Lohara	398	19°58'36.1	79°20'19.3
2	Preparation Of Bud Gfrafting Plants	10000 No.s		5.55	Chandrapur	Chandrapur	RFOR-1	Lohara	Lohara	398	19°58'32.4	79°20'19.3
3	Preparation of RET Species Plants 10000 plants	10000		2.41	Chandrapur	Chandrapur	RFOR-1	Lohara	Lohara	398/403/407	19°58'32.4	79°20'19.3
4	Establishment of New Hightech Nursery	1		50.00	Chandrapur	Chandrapur	RFOR-1	Lohara	Lohara	398/403/407	19°58'36.1	79°20'19.3
5	Selection of seed plot	5 Ha	387.23	1.42	Kolhapur	Pune	Ajara	kine	kine	249 B	16°04'66.3	74°12'51.4
6	Selection of seed plot	5 Ha	387.23	1.42	Kolhapur	Pune	Ajara	Yamekond	Yamekond	255 B	16°04'66.7	74°12'52.9
7	Ghan Lagvad	1 Ha	387.23	5.22	Kolhapur	Pune	Ajara	Kine	Kine	249 B	16°04'48.2	74°12'48.2
8	Production of Seedlings from Plus Tree seeds. Pre Mansoon Work.	5 Ha	399.73	9.12	Nagpur	Nagpur	Sakoli	Mundipar	Mundipar	188	21°03'54.64	79°56'10.16
	Production of Seedlings from Plus Tree seeds. First Year (FYO)			7.75	Nagpur	Nagpur	Sakoli	Mundipar	Mundipar	188	21°03'54.64	79°56'10.16
9	Test the growth potential of Murudshenga by stem cutting method.	1 Ha	Lumsum	2.00	Pune	Pune	Koynanagar	Koynanagar	Koynanagar	434	17°23'88.4	73°45'02.3
10	Field Trial of Inland Moha (Madhuca Longifolia) FYO	2 Ha	-	3.56	Chandrapur	Chandrapur	Chandrapur	Chandrapur	Chandrapur	-	19°58'36.1	79°20'19.3
11	Study of growth of Vaniella with different tree species.	700 Nos	-	7.00	Pune	Pune	Pune	Gureghar	Gureghar	139	1755.30000	73°42.682
		300 Nos		3.00	Pune	Pune	Pune	Hadapsar	Hadapsar	188pt.	18°52.262	73°95.043
	Sub total of New research projects by research wing of Maharashtra Forest Department			**102.04**								

Works proposed					Location of work						Latlong	
Rule No.	**Item of work**	**Quantity**	**Rate**	**Amount (Rs. in Lakhs**	**Circle**	**Division**	**Range**	**Round**	**Beat**	**Compartment No**	**Latitude**	**Longitude**
1	2	3	4	5	6	7	8	9	10	11	12	13
5(2)(m)	**Management of biological diversity and biological resource**											
ii	**Ongoing research Project by research wing of Maharashtra Forest Department.**											
1	Maintenance of Research Centre Pune.	1 Ha	387.23	2.78	Pune	Pune	Pune	Pune	Pune	500	18°51.535	73°89.622
2	Maintenance of Bamburium at Hadapsar Research Center	.30 Ha	387.23	0.29	Pune	Pune	Pune	Hadapsar	Hadapsar	188pt.	18°52.311	73°94.955
3	Tamarindus indica Germ Plasma Bank Care	.50 Ha	387.23	0.80	Pune	Pune	Pune	Hadapsar	Hadapsar	188pt.	18°52.262	73°95.043
4	Maintenance of old tests at Hadapsar Research Center	2.50 Ha	387.23	0.78	Pune	Pune	Pune	Hadapsar	Hadapsar	188pt.	18°60.054	73°82.747
5	Maintenance of Subabhul Trial Plot Plantation	1 Ha	387.23	0.05	Pune	Pune	Pune	Patas / Daund	Patas / Daund	1199/4	18°45.195	7450.60300
6	Maintenance of old tests at Hadapsar Research Center	84.46 Ha	387.23	3.13	Pune	Pune	Pune	Gureghar	Gureghar	139	17°55.3	73°42.682
7	Maintenance of old tests at Hadapsar Research Center	20 Ha	387.23	0.76	Pune	Pune	Pune	Bondarwadi	Bondarwadi	188pt.	18°52.311	73°94.955
8	Maintenance of old tests at Hadapsar Research Center	60 Ha	387.23	1.14	Pune	Pune	Pune	Lingmala	Lingmala	188pt.	18°52.311	73°94.955
9	Maintanance and Protection	21 hq	387.23	1.84	Kolhapur	Pune	Ajara	Parewadi	Parewadi	151 B	16°08"023"	74°11'"416'
10	Maintanance and Protection	29 hq	387.23	0.49	Kolhapur	Pune	Ajara	Kasarkandgaon	Kasarkandgaon	244	16°04"738"	74°12'"656'
11	Maintanance and Protection	71 hq	387.23	1.18	Kolhapur	Pune	Ajara	Sulgaon	Sulgaon	158 A	16°08"195"	74°12'"556'
12	Maintanance and Protection	10 hq	387.23	0.17	Kolhapur	Pune	Ajara	Sulgaon	Sulgaon	162 B	16°08"037"	74°121'"595'
13	Maintanance and Protection	31 hq	387.23	0.52	Kolhapur	Pune	Ajara	Sulgaon	Sulgaon	158 B	16°07'"763"	74°13'"224'
14	Maintanance and Protection	60 hq	387.23	1.00	Kolhapur	Pune	Ajara	Kasarkandgaon	Kasarkandgaon	214	16°07"156"	74°12'"306'
15	Maintenance and Protection of Research Center	45 Ha	387.23	2.04	Pune	Pune	Koynanagar	Koynanagar	Koynanagar		17°23'884"	73°45'023"
16	Maintenance and Protection of Research Center	44 Ha	387.23	1.36	Pune	Pune	Koynanagar	Chirambe	Chirambe		17°25'870"	73°46'327"
17	Maintenance and Protection of Research Center	12.5 Ha	387.23	0.25	Pune	Pune	Koynanagar	Nerale	Nerale	452	17°20'524"	73°52'791"
18	Maintenance and Protection of Research Center	5 Ha	387.23	0.73	Pune	Pune	Koynanagar	Rethredharan	Rethredharan	78,79	17°01'165"	73°10'853"
19	Maintenance and Protection of Research Center	19.12 Ha	387.23	0.44	Pune	Pune	Dodamarg	Padve Mazgaon	Padve Mazgaon	193 A	15°48'921"	73°54'581"
20	Maintenance and Protection of Research Center	84 Ha	387.23	1.01	Pune	Pune	Fondiye	Fondiye	Fondiye	-	15°48'816"	73°54'525"
21	Maintenance and Protection of Research Center	73.01 Ha	387.23	0.88	Pune	Pune	Tervanmedhe	Tervanmedhe	Tervanmedhe	-	15°46'595"	74°04'802"
23	Moha Bud Plantation First Year work	2 Ha.	450	4.74	Pune	Chandrapur	RFOR-1	RFOR-1	RFOR-1	-	-	-

Works proposed					Location of work						Latlong	
Rule No.	Item of work	Quantity	Rate	Amount (Rs. in Lakhs	Circle	Division	Range	Round	Beat	Compartment No	Latitude	Longitude
1	2	3	4	5	6	7	8	9	10	11	12	13
24	Agroforestry model Suru Fourth Year	1 Ha	450	1.41	Pune	Chandrapur	RFOR-2	Lohara	Lohara	398	19° 58 697	79° 20 623
25	Teak Seed Orchard Cleaning, & Fireline	38 Ha.	450	2.05	Pune	Chandrapur	RFOR-3	Lohara	Lohara	407/409/397/ 398	19° 58 532	79° 20 567
26	Teak Seed Seedling Orchard Cleaning, & Fireline	3 Ha	450	0.16	Pune	Chandrapur	RFOR-4	Lohara	Lohara	407/397/ 398	19° 58 288	79° 20 220
27	NGPB Cleaning & Fireline	5.1 Ha	450	0.27	Pune	Chandrapur	RFOR-5	Lohara	Lohara	398	19° 58 070	79° 20 430
28	Teak Bud Multiplication Garden Cleaning & Fireline	18.45 Ha	450	0.99	Pune	Chandrapur	RFOR-6	Lohara	Lohara	398	19° 58 646	79° 20 468
29	Teak Progeny trial Cleaning & Fireline	13 Ha	450	0.70	Pune	Chandrapur	RFOR-7	Lohara	Lohara	407/397/ 398	19° 58 326	79° 20 581
30	Nonteak Progeny trial Cleaning & Fireline	2 Ha	450	0.11	Pune	Chandrapur	RFOR-8	Lohara	Lohara	398	19° 58 753	79° 20 445
31	Teak Clonal plantation Cleaning & Fireline	6.75 Ha	450	0.36	Pune	Chandrapur	RFOR-9	Lohara	Lohara	398	19° 58 702	79° 20 463
32	Semal,Shisam,Arjun/Anjan seed orchard Cleaning & Fireline	5 Ha	450	0.27	Pune	Chandrapur	RFOR-10	Lohara	Lohara	407	19° 58 287	79° 20 550
33	VMPA(Teak) Porka cutting & Fireline	5.50 Ha	450	0.30	Pune	Chandrapur	RFOR-11	Lohara	Lohara	403, 398	19° 58 460	79° 19° 536
34	Teak Seed Orchard Cleaning, & Fire line	2 Ha.	450	0.11	Pune	Chandrapur	RFOR-12	Lohara	Lohara	403	19° 58 712	79° 20 899
35	Teak Progeny trial Cleaning & Fire line	1 Ha	450	0.05	Pune	Chandrapur	RFOR-13	Lohara	Lohara	403	19° 58 715	79° 20 000
36	Teak Bud Multiplication Garden Cleaning & fire line	2 Ha.	450	0.11	Pune	Chandrapur	RFOR-14	Lohara	Lohara	403	19° 58 779	79° 20 000
37	Teak Clonal plantation Cleaning & fire line	2.50 Ha	450	0.14	Pune	Chandrapur	RFOR-15	Lohara	Lohara	403	19° 58 775	79° 20 895
38	Sample Plot Cleaning & Fire line cutting & Burning	10 Ha	450	0.54	Pune	Chandrapur	RFOR-16	Kanhalgaon,Mahurli 2,Visapur,Govindvan,Urjanagar,Tadoba,Lohara	Kanhalgaon,Mahurli 2,Visapur,Govindvan,Urjanagar,Tadoba,Lohara	13,16, 307/2, 397, 402, 460, 91, 143, 170, 312 A, 48 ,50, 51	-	-
39	TSO Work Porka cutting, & Fireline	55 Ha	450	2.97	Pune	Chandrapur	RFOR-17	Tadgaon,Botaufundi	Tadgaon,Botaufundi	104/194/ 180	19° 27 017	80° 22 465
40	New CPT Work	30 Ha	600	0.18	Pune	Chandrapur	RFOR-18	Tadgaon	Tadgaon	104/194/ 180	19° 33 104	80° 38 202
41	Maintance of Sample plots 11 plots	0.023 Ha	406.46	0.25	Amravati	Sipna WL	Semadoh	Semadoh	Semadoh	168	21°29'479"	77°16'593"
		0.023 Ha			Amravati	Sipna WL	Semadoh	Semadoh	Semadoh	168	21°29'475"	77°17'179"
		0.023 Ha			Amravati	Sipna WL	Semadoh	Semadoh	Semadoh	168	21°29'476"	77°17'252"
		0.1012 Ha			Amravati	Sipna WL	Semadoh	Semadoh	Semadoh	168	21°29'477"	77°17'236"
		0.0506 Ha			Amravati	Sipna WL	Semadoh	Semadoh	Semadoh	148	21°29'575"	77°11'518"
		0.0607 Ha			Amravati	Sipna WL	Semadoh	Semadoh	Semadoh	148	21°29'580"	77°11'512"
		0.2023 Ha			Amravati	Sipna WL	Paratwada	Semadoh	Semadoh	148	21°29'460"	77°11'460"
		0.2023 Ha			Amravati	Sipna WL	Paratwada	Semadoh	Semadoh	148	21°29'415"	77°17'423"
		0.2214 Ha			Amravati	Sipna WL	Paratwada	Semadoh	Semadoh	153	21°29'470"	77°13'400"
		0.1564 Ha			Amravati	Sipna WL	Paratwada	Semadoh	Semadoh	160	21°29'488"	77°15'453"
		0.2609 Ha			Amravati	Sipna WL	Paratwada	Semadoh	Semadoh	153	21°29'354"	77°15'043"

Works proposed					Location of work						Latlong	
Rule No.	Item of work	Quantity	Rate	Amount (Rs. in Lakhs	Circle	Division	Range	Round	Beat	Compartment No	Latitude	Longitude
1	2	3	4	5	6	7	8	9	10	11	12	13
42	Maintance of L.T. plots 6 plots	3.60 Ha	406.46	0.24	Amravati	Sipna WL	Paratwada	Raipur	Raipur	259	21°35'141"	77°15'476"
		3.52 Ha	406.46	0.24	Amravati	Sipna WL	Paratwada	Hatru	Hatru	475	21°41'085"	77°19'592"
		1.63 Ha	406.46	0.11	Amravati	Sipna WL	Paratwada	Hatru	Hatru	483	21°40'473"	77°20'521"
		3.68 Ha	406.46	0.25	Amravati	Sipna WL	Paratwada	Raipur	Raipur	241	21°31'366"	77°13'224"
		3.00 Ha	406.46	0.20	Amravati	Sipna WL	Paratwada	Hatru	Hatru	503	21°38'063"	77°18'493"
		3.06 Ha	406.46	0.21	Amravati	Sipna WL	Paratwada	Hatru	Hatru	536	21°41'058"	77°19'366"
43	Maintainance of Clonal Teak Plantation	1.50	387.23	0.40	204	Jalna	Jalna	Jalna	Jalna	204	19° 52 274	75 55 212
44	Maintainance of Clonal Teak Plantation	1.25 Ha	387.23	0.24	204	Jalna	Jalna	Jalna	Jalna	204	19° 52 292	75 55 245
45	Maintainance of Clonal Teak Plantation	1.25 Ha	387.23	0.31	204	Jalna	Jalna	Jalna	Jalna	204	19° 52 19°55	75 55 0003
46	Maintainance of Clonal Teak Plantation	1.25 Ha	387.23	0.27	Pune	Jalna	Jalna	Jalna	Jalna	204	19° 52 285	75 55 258
47	Maintainance of Clonal Teak Plantation	1.25 Ha	387.23	0.31	Pune	Jalna	Jalna	Jalna	Jalna	204	19° 52 299	75 55 312
48	Fireline making	50 ha	387.23	0.19	Pune	Jalna	Jalna	Jalna	Jalna	204		
49	Yearly Maintenance of Biodivercity Plot	5 Ha	387.23	0.36	Pune	Jalna	Navapur	Ukalpani	Ukalpani	63	21°16 51 18	73°78 17 93
50	Yearly Maintenance of Seed Plot	0.5 Ha	387.23	0.08	Pune	Jalna	Navapur	Karanji	Karanji	57	21°14 91 77	73°78 98 96
51	Yearly Maintenance of Seed Plot	2 Ha	387.23	0.21	Pune	Jalna	Navapur	Karanji	Karanji	57	21°15 87 25	73°78 97 13
52	Yearly Maintenance of Seed Plot	0.5 Ha	387.23	0.08	Pune	Jalna	Navapur	Karanji	Karanji	57	21°16 51 1	73°78 97 1
53	Yearly Maintenance of Seed Plot	1 Ha	387.23	0.11	Pune	Jalna	Navapur	Karanji	Karanji	57	21°16 51 08	73°78 97 93
54	Yearly Maintenance of Seed Plot	1 Ha	387.23	0.11	Pune	Jalna	Navapur	Karanji	Karanji	57	21°16 51 18	73°78 17 93
55	Yearly Maintenance of Seed Plot	1 Ha	387.23	0.11	Pune	Jalna	Navapur	Karanji	Karanji	57	21°16 51 2	73°78 17 93
56	Yearly Maintenance of Seed Plot	1 Ha	387.23	0.11	Pune	Jalna	Navapur	Karanji	Karanji	57	21°16 51 88	73°78 17
57	Yearly Maintenance of Seed Plot	1 Ha	387.23	0.11	Pune	Jalna	Navapur	Karanji	Karanji	57	21°16 51 1	73°78 17 11
58	Yearly Maintenance of Seed Plot	2 Ha	387.23	0.22	Pune	Jalna	Navapur	Karanji	Karanji	57	21°16 51 15	73°78 97 15
59	Yearly Maintenance of Seed Plot	1 Ha	387.23	0.11	Pune	Jalna	Parola	Eklagna	Eklagna	391	21°02 35 15	75°42 50 47

Works proposed					Location of work						Latlong	
Rule No.	Item of work	Quantity	Rate	Amount (Rs. in Lakhs	Circle	Division	Range	Round	Beat	Compartment No	Latitude	Longitude
1	2	3	4	5	6	7	8	9	10	11	12	13
60	Yearly Maintenance of Seed Plot	2 Ha	387.23	0.21	Pune	Jalna	Parola	Eklagna	Eklagna	391	21°02 35 48	75°42 58 68
61	Yearly Maintenance of Preservation Plot	30 H.a.	387.23	1.79	Thane	Jawhar	Sawa	Talawali	Talawali	368	19° 54 40 8	73° 05 34 7
		10.92 H.a.	387.23	0.65	Thane	Dahanu	Kasa	Ranshet	Sarani	238	19° 54 55 8	72° 54 32 0
		10.00 H.a.	387.23	0.56	Thane	SGNP Borivali	Yeoor	Yeoor	Yeoor	1143	19° 13 28 2	072° 56 74 6
		10.00 H.a.	387.23	0.60	Thane	Shahapur	Dolkhamb	Dolkhamb	Dolkhamb	599	19° 28 04 5	73° 39 56 9
62	Yearly Maintenance of Seed Plot	5.00 H.a.	387.23	0.24	Thane	Jawhar	W.Wada	Mandva	Mandva	503	19° 41 37 3	73° 11 44 2
		5.00 H.a.	387.23	0.24	Thane	FDCM Thane	FDCM Wada	Posheri	Posheri	981	19° 40 50 7	73° 03 29 5
		5.00 H.a.	387.23	0.24	Thane	Jawhar	E. Wada	Ujjaini	Vadvali	478	19° 47 45 9	73° 16 15 8
		5.00 H.a.	387.23	0.24	Thane	Jawhar	E. Wada	Palsai	Kalmbhai	180	19° 33 36 6	73° 00 56 7
		5.00 H.a.	387.23	0.24	Thane	Jawhar	Mokhda	Gonda	Gonda	102	19° 56 20 3	73° 25 39 6
63	Yearly Maintenance of Biodivercity Plot	5.00 H.a.	387.23	0.25	Thane	Dahanu	Palghar	Chahade	Chahade	98	19° 41 74 2	72° 49 54 6
64	Yearly Maintenance of Teak Progeny Trial	0.50 Ha.	387.23	0.02	Thane	Shahapur	Shahapur	palshin	Palshin	948	19° 35 66 1	73° 21 30 2
		3.00 H.a.	387.23	0.15	Thane	Thane	Murbad	Murbad	Murbad	773	19° 26 71 7	73° 39 20 9
65	Yearly Maintenance of B.M.G.Plot	1.50 H.a.	387.23	0.07	Thane	Jawhar	W.Wada	Aalman	Aalman	512	19°62 82 41	73°11 17 81
		1.50 H.a.	387.23	0.07	Thane	Thane	Murbad	Murbad	Murbad	773	19°26 61 9	73°39 19 9
		1.00 H.a.	387.23	0.05	Thane	Dahanu	Kasa	Bharad	Bharad	239	19° 54 00 6	72° 56 36 5
66	Yearly Maintenance of Teak Model Plantantion	1.25 H.a.	387.23	0.06	Thane	Thane	Palshin	Palshin	Palshin	948	19° 35 66 1	73° 21 30 2
		1.50 Ha.	387.23	0.07	Thane	Thane	Murbad	Murbad	Murbad	773	19°26 86 3	73°39 68 0
		1.25 H.a	387.23	0.06	Thane	Dahanu	Kasa	Bharad	Kamare	239	19° 54 05 3	72° 56 29 1
67	Yearly Maintenance of Old Introduction Trials	4.73 H.a.	387.23	0.30	Thane	Shahapur	Shahapur	Shahapur	Shahapur	881	19° 27 20 0	73° 19 16 3
		5.0 H.a	387.23	0.32	Thane	Shahapur	Shahapur	Shahapur	palshin	948	19° 35 79 0	73° 21 43 0
		10.00 H.a	387.23	0.64	Thane	Shahapur	Shahapur	Shahapur	Palshin	948	19° 35 76 2	73° 21 34 5
		10.00 H.a.	387.23	0.64	Thane	Jawhar	wada	wada	Aalman	512	19°62 82 07	73°11 14 13
		5.0 H.a	387.23	0.32	Thane	Jawhar	wada	wada	Aalman	512	19°62 94 92	73°11 31 28
		10.00 H.a	387.23	0.64	Thane	Dahanu	palghar	kamare	Kamare	120	19° 39 63 4	72° 47 165
		10.00 H.a.	387.23	0.64	Thane	Dahanu	palghar	kamare	Kamare	120	19° 39 55 0	72° 47 120

Works proposed					Location of work						Latlong	
Rule No.	**Item of work**	**Quantity**	**Rate**	**Amount (Rs. in Lakhs**	**Circle**	**Division**	**Range**	**Round**	**Beat**	**Compartment No**	**Latitude**	**Longitude**
1	2	3	4	5	6	7	8	9	10	11	12	13
68	Field Triales of Inland Casurina, Melia Dubia For Yield Estimation (Fifth Year Plantaion)	1.00 H.a.	387.23	1.47	Thane	Jawhar	Wada	Wada	Aalman	512	19°62 38 7	73°10 58 2
69	Field Triales of Inland Casurina For Yield Estimation (Fifth Year Plantaion)	1.00 H.a.	387.23	1.87	Thane	Shahapur	Shahapur	Palshin	Palshin	948	19° 3576 7	73° 2151 3
70	Yearly Maintenance of Plus Tree & Candided Plus Tree	11+27	387.23	0.06	Thane	Jawhar	Wada	Wada	wada	512	19°63 03	73°11 31 4
		8	387.23	0.04	Thane	Jawhar	Wada	Wada	Mandva	502	19°69 14 1	73°19 93
		2	387.23	0.01	Thane	Shahapur	Shahapur	Shahapur	Kalmbhe	881	19°45 29 6	73°31 98 6
		14	387.23	0.07	Thane	Shahapur	Shahapur	Shahapur	Kalmbhe	881	19°62 03 9	73°26 62 9
		7	387.23	0.04	Thane	Dahanu	Kamare	Kamare	Mahim	808	19°3944 9	72°4707 3
		9	387.23	0.05	Thane	Dahanu	Kamare	Kasa	Sonale	247	19°94 6	72°94 90 6
		12	387.23	0.06	Thane	Dahanu	Kamare	Palghar	Chahade	98	19° 42 02 2	72° 49 25 8
	Sub total of Ongoing research Project by research wing of Maharashtra Forest Department.			**54.87**								
	Total of Works under Not less than 80 % component (Rule 5 (2))			**156.91**								
5 (3)	**Works under not more than 20 % component (Rule 5 (3))**											
5(3) (e)	**Construction of residential and official buildings in forests for front line staffs deployed for protection of forest and wildlife.**											
1	New Construction of Type I quarter , Tadgaon Range at Allapalli	2	22	44.00	Chandrapur	Chandrapur	Tadgaon	Allapalli	Allapalli	-	19° 25 29.8	80° 03 43.6
2	New Construction of Type II quarter , Tadgaon Range at Allapalli	1	26	26.00	Chandrapur	Chandrapur	Tadgaon	Allapalli	Allapalli	-	19° 25 29.3	80° 03 45.5
	Total of Works under not more than 20 % component (Rule 5 (3))			**70.00**								
	Grand Total			**226.91**								

ANNUAL PLAN OF OPERATIONS 2022-23						
FORMAT VII A---- Forestry and other activities proposed under Net Present Value amount (Please see Rule no. 5(2), 5(3), and proviso under Rule 5(3) (NPV - 04)						
Education and Training Wing						
	Works Proposed				Location of work	
Sr.no	Item of work	Quantity	Rate	Amount (Rs. In Lakhs)	Circle	Division
1	2	3	4	5	6	7
5 (3) (b)	**Promoting conservation, sustainable use and documentation of biological diversity including preservation of habitats, conservation of land and folk varieties and cultivars, domesticated stocks and breeds of animals and microoganisms and chroniciling of knowledge relating to biological diversity**					
I	**Documentation and Pubications study materials for FTIS**					
i	Printing of study notes for the 2 Academies@ 5L and 4 FTIs@2 L	2 Academies and 4 FTIs	5L per Academy and 2 L per FTI	18.00	Education	2 Academies and 4 FTIs
ii	Purchhase of books for the 2 Academies@ 5L and 4 FTIs@2 L	2 Academies and 4 FTIs	5L per Academy and 2 L per FTI	18.00	Education	2 Academies and 4 FTIs
	Total (I)			**36.00**		
II	**Conductiong Workshops and Confereces**					
i	Conducting 3 day Workshop at Kundal and Chandrapur Academy and FTIs at Chikhaldara, Shahapur, Pal, Jalna -3day X 40 participants per batch @ Rs.1500/- per day per participant.	24 Workshops	1.8 L per Workshop	43.00	Education	2 Academies and 4 FTIs
ii	Conducting 1 day Conference at Kundal and Chandrapur Academy and 4 FTI - 1 day X 60 per batch @ Rs.1500/- per day per participant.	24 Conferences	0.9 L per Conference	21.00	Education	2 Academies and 4 FTIs
	Total (II)			**64.00**		
III	**Capacity building of Forest Staffs through FTI/Forest academies/other institutions**					
(a)	**Induction Trainings**					
i	Induction training for Forest Guards (six months), 2 batches in year in each of 4 FTIs	2 batches of 350 Trainees per batch total 700 trainees	Rs 50000 per trainee	350.00	Education	FTI Chikhaldara, Pal, Shahpur and Jalna
ii	Induction training for promoted foresters, (one month),50 trainees per batch. 12 batches in Chandrapur and Kundal Academy	12 batches, 600 trainees	Rs 22500 per trainee	135.00	Education	Chandrapurand Kundal Academy
iii	Induction training for promoted Range Forest Oficers, (one month),50 trainees per batch. 6 batches in Chandrapur and Kundal Academy	6 batches 300 Trainees	Rs 22500 per trainee	67.50	Education	Chandrapurand Kundal Academy
iv	Induction training for promoted Assistant Conservator of Forests (15 days), 25 trainees per batch. 3 batches in Chandrapur Academy	3 Batches, 75 trainees	Rs 15000 per trainee	11.00	Education	Chandrapur Academy
v	Induction training for Clerks (45 days), 30 trainees per batch. 4 batches in Chandrapur and Kundal Academy	4 Batches, 120 Trainees	Rs 33750 per trainee	40.50	Education	Chandrapur and Kundal Academy
	Total (a)			**604.00**		

	Works Proposed				Location of work	
Sr.no	**Item of work**	**Quantity**	**Rate**	**Amount (Rs. In Lakhs)**	**Circle**	**Division**
1	**2**	**3**	**4**	**5**	**6**	**7**
(b)	**Refresher Trainings (Compulsory)**					
i	Refresher training for Forest Guards (2 weeks), 194 batches in year in 2 Academies and 4 FTIs	194 batches of 30 Trainees per batch total 5820 trainees	Rs 12000 per trainee	698.00	Education	2 Academies and 4 FTIs
ii	Refresher training for Foresters (2 weeks), 60 batches (30 Trainees per batch)in 2 Academies and 4 FTIs	60 batches, 1800 trainees	Rs 12000 per trainee	216.00	Education	Chandrapurand Kundal Academy
iii	Refresher training for Range Forest Officers (2 weeks), 20 batches (30 Trainees per batch)in 2 Academies	20 batches 600 Trainees	Rs 18000 per trainee	108.00	Education	Chandrapurand Kundal Academy
iv	Refresher training for Assistant Conservator of Forests (1 week), 9 batches (20 Trainees per batch)in Chandrapur Academy	9 batches, 180 trainees	Rs 7500 per trainee	13.00	Education	Chandrapur Academy
v	Refresher training for DFOs (1 week), 3 batches (20 Trainees per batch)in Chandrapur Academy	3 batches, 60 trainees	Rs 7500 per trainee	5.00	Education	Chandrapur Academy
vi	Refresher training for Surveyors (1 week), 4 batches (20 Trainees per batch)in Kundal and Chandrapur Academy	4 Batches, 80 Trainees	Rs 5000 per trainee	4.00	Education	Chandrapur and Kundal Academy
vii	Refresher training for Accountant (1 week), 26 batches (20 Trainees per batch)in Kundal and Chandrapur Academy	26 batches, 520 trainees	Rs 5000 per trainee	26.00	Education	Chandrapur and Kundal Academy
viii	Refresher training for Clerks (2week), 33 batches (30 Trainees per batch)in Kundal and Chandrapur Academy and 4 FTIs	33 Batches,990 trainees	Rs 12000 per trainee	119.00	Education	2 Academies and 4 FTIs
	Total (b)			**1189.00**		
(c)	**Special Trainings**					
i	Training for Maintenance of vehicles for drivers (3 days) batch of 25 trainees	4 batches, 100 trainees	Rs 3000 per trainee per trainee	3.00	Education	Chandrapur and Kundal Academy
ii	Training for Guides (3 days) ,30 trainees per batch	12 batches,360 trainees	Rs 3000 per trainee per trainee	4.00	Education	2 Academies and 4 FTIs
iii	Training for members of JFM and VEDCs (3 Days), 30 trainees per batch	36 Batches, 1080 Trainees	Rs 3000 per trainee per trainee	32.50	Education	2 Academies and 4 FTIs
iv	Training for Biodiversity Conservation for BMC members (3 Days)	36 Batches, 1080 Trainees	Rs 3000 per trainee per trainee	32.50	Education	2 Academies and 4 FTIs
v	Training for Hospitality Management for local youth (3 days), 30 trainees per batch	12 Batches, 360 Trainees	Rs 3000 per trainee per trainee	11.00	Education	2 Academies and 4 FTIs
	Total (C)			**83.00**		
	Total III			**1876.00**		
	Grand Total I+II=III			**1976.00**		
	Grand Total for Education and Training including Infrastructure Development			**1976.00**		

ANNUAL PLAN OF OPERATIONS 2022-23						
FORMAT VII A---- Forestry and other activities proposed under Net Present Value amount (Please see Rule no. 5(2), 5(3), and proviso under Rule 5(3) (NPV - 04)						
Publicity & Information Officer, Nagpur						
Sr. No	**Particulars of work**	**Agency**	**Quantity tentative Date**	**Rate**	**Amount (Rs. In Lac)**	**Details**
1	**2**	**3**	**4**	**5**	**6**	**7**
5(3)(i)	**Awareness creation about protection and Conservation of Forest flora and fauna through publicity via print and electronic media**					
(a)	Publicity through Akashwani (Air)-Publicity of forest wildlife and Nature conservation, legal provision etc, through creatonand broadcasting of Jingles, sponsored Programmers awareness talk shows etc.	Akashwani	15 Program	41,712	6.25	Rate for sponsorship of broadcasting Special Programme is Rs. 41,712 and rate for broadacsting of Jingle Messages depends upon time span
(b)	Publicity Through audio media in ST BUS Stand for Publicity of forest wildlife and nature conservation, legal provision, schemes, etc. through creation and broadcasting of jingles, interview and discussion etc.	DGIPR empaneled Agency	35 station 75 days	Rs. 20- per 10 sec.	44.60	Rs. 37,80,000 for Jingle message of 45 seconds to be broadcasted on 35 Bus Stand for 16 times in a day on 75 days and Rs. 6,80,400/- for GST @ 18%
(c)	Publicity Through Hoarding- Vanmahotsav, wildlife week & various scheme	DGIPR	200 Hoarding for 3 Months	5500/- for single Hording in a month	38.95	Rs. 33,00,000 for 200 Hordings of 20X10 Feet size @ 5,500 per month Charges and Rs. 5,94,000/- for GST @ 18%
(d)	Publicity through Airport Nagpur- Vanmahotsav, wildlife week & various scheme	DGIPR empaneled Agency	5 to 7 Location Vanmahotsav, Wildlife Week and others		20.00	For publicity, advertizes are given to shocased on Nagpur Airport area as per available location and size and DGIPR/DAVP approved rate
(e)	Awareness Stall in different exibitions such as Agrovision etc.	decided by obtaining quotations/tenders as per time and numbers	Approximately 2	300000	6.00	Rate depends on exibition spot and time span
(f)	publicity material such as posters, leaflets, Charts, booklets, copy, tebal book, momento	decided by obtaining quotations/tenders as per time and numbers			10.00	Rates derived are depend on size and numbers of publicity material by obtaining quotations/tenders
(g)	publicity through hoarding/LED screen of Van bhavan/van sambhagruh etc.	decided by obtaining quotations/tenders as per time and numbers	2 times in a month	5670 each	1.60	Works are done two times in months by obtaining quotations/tenders depending upon size
(h)	preparation of documentries, video clips, audio jingles for the various important days such as environment day, world foresstry day, earth day, wildlife week	decided by obtaining quotations/tenders as per time and numbers	Vanmohotsaw -3/ Wildlife week -2 and other important days such as Enviornment day,world foresstry day, Biodiversity Day Vasundhara day -5	100000 each	5.00	Rates are decided by obtaining quotations/tenders as per time and numbers

Sr. No	Particulars of work	Agency	Quantity tentative Date	Rate	Amount (Rs. In Lac)	Details
1	2	3	4	5	6	7
(i)	arranging films show awareness programme of camps on forest and wildlife in school and colleges in vidharabha reginon	From this Office	50 programme	10000 /School, college	5.00	Rs. 10000/- for 50 Programmes as per approximate expenditure of Rs. 10,000 for each School/Collage
(j)	Broadcasting of important dacumetris advertisement on doordarshan	Doordarshan	5	52000	2.60	Programmes are arranged as per time and numbers
(k)	Publicity through BQS Nagpur- Vanmahotsav, wildlife week & various scheme	DGIPR empaneled Agency	25	32000	10.00	Rs. 8,00,000 for publishing Advertise on 25 BQS @ Rs. 32000 Per Month + GST
	Total				**150.00**	

ANNUAL PLAN OF OPERATIONS 2022-23		
FORMAT VII A---- Forestry and other activities proposed under Net Present Value amount (Please see Rule no. 5(2), 5(3), and proviso under Rule 5(3) (NPV - 04)		
InformationTechnology and Policy Wing		
Works proposed		
Sr. No.	**Item of work**	**Amount (Rs. in Lakhs)**
1	**2**	**3**
1	Advance Payment for Recurring Charges to BSNL 1. Broadband 2. Internet Lease Line and NICNET Lines 3. MPLS VPN Line at 4. ILL for GIS at HQ	180.00
2	Payment for Sim Card at Circle offices for mobile connectivity services @170/- per month per sim (Sim Apprx. 8423) as per GR dated 21.10.2020	172.00
3	Hello Forest Services (MTNL FPH LINE and LAND LINE)	4.00
4	AMC of Customization of Maharashtra Forest Dept.s Geoportal based on intergraph's Geospatial Server with technical support (3rd year Warranty)	16.52
5	AMC of Intergraph Geospatial Server (Includes GeoMedia web map professional Apollo professional and Geoportal)	16.40
6	Payment to Intergraph to Change Request for customization of MFD Geoportal for 4 Modules of "MAHAVAN App" (Rs.2.36 Lac per module X 4)	9.44
7	Payment to MRSAC for Georeferencing of Forest Boundaries Establishing of Ground Control Points at Pune, Raigad and Nashik District	200.00
8	Payment to NRSC for Procurement of Satellite imageries for recongnition of FRA in Maharashtra State	200.00
9	Procurement of Computer, Printer, Modem for All Border Check Post under e-TP Apps. (120 Check Post - upto 10 km from Border)	85.00
10	Procurement of Router, Polycom Devices and Video Wall for 9 Territorial Division	66.64
	Total	**950.00**

ANNUAL PLAN OF OPERATIONS 2022-23				
FORMAT VII A---- Forestry and other activities proposed under Net Present Value amount (Please see Rule no. 5(2), 5(3), and proviso under Rule 5(3) (NPV - 04)				
PCCF (Wildlife) M.S. Nagpur				
Sr. No.	**Particulars of work**	**Details of Works**	**PCCF (WL) M.S. NGP**	
			Unit/Quantiry	**Amt.**
1	**2**	**3**	**4**	**5**
5(2)(h)	**Voluntary relocation of villages from Protected areas (including cost of land and other property of the field owners)**	**Rehabilitation of Villages from Protected Areas.**		
		Amount for land acquisition Umresd Karhandla WLS (394.87 Ha,)	-	5814.00
		The Refund Amount to the families used for Developing basi aminities deducted from package amount Rs. 10 Lakhs in Ranbodi Rehabilitation Work	-	530.00
		Rehabilitation Pili (balance requirement for 10.00 lakhs package each for currently eligible family and new claiments who likely to be eligible) + Pili House Valuation + Land Valuation	-	1436.00
		Rehabilitation Chopan (balance requirement for 10.00 lakhs package each for currently eligible family) + House Valuation + Land Valuation	-	2220.00
		Total		**10000.00**
5(2)(i)	**Improvement of wildlife habitat as provided in the approved wildlife management plan or working plan**	**Conservation Reserves and all related circle**		
	All Wildlife Management works like Rejuvenation of lakes & Rivers, Meadow development, Creation & maintenance of water sources / water holes for wildlife, Eradication of invasive species etc. will be carried out as per approved Management plan.	For Conservation Reserves which do not receive fund from CSS, State Plan & or any other sources. **Existing Conservation Reserves-** (1) Bhorgad (2) Kolamarka (3) Muktai-Bhavani (4) Mamdapur (5) Toranmal (6) Anjaneri (7) Tilari **New Conservation Reserves -** (1) Chandgad (2) Amboli-Dodamarg-(2) Panhalgad (3) Vishalgad (4) Jor-Jambhali (5) Mayani (6) Muniya (7) Mahendri Conservation Reserves. (8) There are at present 15 Conservation Reserves notified under 36-A of Wildlife (Protection) Act, 1972 in the State and 21 Conservation Reserves are proposed to be notified in coming days. As decided in 16 th SBWL meeting dedicated and assured fund is to be provided for the management of the Conservation Reserves through CAMPA funds.	15 Conservation Reserves	4000.000
	Total for Improvement of wildlife habitat			**4000.00**
5(2)(k)	**Establishment, operation and maintenance of animal rescue centre and veterinary treatment facilities for wild animals**			
i	Establishment, operation and maintenance of animal rescue centre and veterinary treatment facilities for wild animals.	As per decision taken in 15th SBWL meeting TTCs have to be established in each Forest Circle	Rs.70.00 lakh per Circle for 11 Circles	770.00
ii	Veterinary treatment facilities for wild animals (Imcluding Provision for Gorewada)		LS	550.00
iii	Animal seizing & capturing devices		LS	50.00

Sr. No.	Particulars of work	Details of Works	PCCF (WL) M.S. NGP	
			Unit/Quantiry	Amt.
1	2	3	4	5
iv	Rescue emergency operations		for all 11 Territorial Circle	110.00
			for 3 wildlife circles	150.00
v	Strengthening of Rapid rescue teams		for all 11 Territorial Circle	55.00
			for 3 wildlife circles	15.00
vi	Management of rewilding of tiger cubs			20.0
	Total			**1720.00**
5(2)(m)	**Management of biological diversity and biological resource**			
i	Ongoing research projects by research wing of Maharashtra Forest Department			
ii	New research projects by research wing of Maharashtra Forest Department			100.0
iii	Base studies for forestry and wildlife related subjects	1) Understanding large carnivorous, conflict issues in Maharashtra for suggesting conflict reduction measures by Wildlife Institute of India (4 year project) for year 2022-23	1	37
		2) Long term monitoring of Tigers co-predator and prey in tiger bearing areas of Vidharbha area by Wildlife institute of India. (10 year project) for year 2022-23	1	80
		3) Establishment of web portal for dissimination of research finding as a dicision support system for policy makers & wildlife manager in Maharashtra. (5 year project) by Wildlife institute of India. for year 2021-22	1	16
		4) Assessment of special and temporal occupancy of Tiger & Elephant in relation to habitate in Sawantwadi and dodamarg by Wildlife institute of India. Spillover for year 2020-21	1	25
		Total		**158.00**
iv	Conservation of Wildlife like GIB, Wild buffalo, Turtle, Vultures, Owl, Sparrow, etc.	1) Establishment of Conservation Breeding centre for Oriental white Backed Vulture and Long Billed Vulture at Pune/Nashik as per the National Action Plan for Vulture conservation (2020-25)	LS	352.00
		2) Conservation translocation of 4-5 tiger female to Navegaon-Nagzira Tiger Reserve from Bramhapuri Landscape with the help of WII, Dehradun.	LS	500.00
		3) Wild buffalo conservation at Sironcha Division	LS	10.00
	Total			**862.00**
	Grand Total			**16840.00**

ANNUAL PLAN OF OPERATIONS 2022-23

FORMAT VII A---- Forestry and other activities proposed under Net Present Value amount (Please see Rule no. 5(2), 5(3), and proviso under Rule 5(3) (NPV - 04)

Mangrove Cell, Mumbai

	Works proposed				**Location of work**						**Latlong**	
Sr. No.	**Item of work**	**Quantity**	**Rate**	**Amount (Rs. in Lakhs**	**Circle**	**Division**	**Range**	**Round**	**Beat**	**Compartment No**	**Latitude**	**Longitude**
1	**2**	**3**	**4**	**5**	**6**	**7**	**8**	**9**	**10**	**11**	**12**	**13**
1	Construction of Labour Shed at Kanjur	1	-	20.00	Mangrove Cell Mumbai	Divisional Forest Officer MMCU	Thane Creek Flamingo Sanctuary	Mulund	Kanjur		N 19 7 22 72	E 72 56 19 07
2	Construction of Labour Shed at Mandale	1	-	20.00	Mangrove Cell Mumbai	Divisional Forest Officer MMCU	Thane Creek Flamingo Sanctuary	Mulund	Mandale		N 19 3 6 31	E 72 56 12 38
	Total	**2.00**		**40.00**								

ANNUAL PLAN OF OPERATIONS 2022-23			
FORMAT VII A---- Forestry and other activities proposed under Net Present Value amount (Please see Rule no. 5(2), 5(3), and proviso under Rule 5(3) (NPV - 04)			
Evaluation Wing			
Sr. No.	**Particular of Works**	**Name of Office**	**Amount required (Rs. Lakhs)**
1	Publication of evaluation Reports (PPO, TYO)	Conservator of Forests (Evalution) M.S. Nagpur	2.00
Grand Total			**2.00**

Annexure – VIII

(Interest Component)

ANNUAL PLAN OF OPERATIONS 2022-23

Interest Component

(Amount in Rs. Lakhs)

Rule No.	Particulars of work	APCCF & CEO (Maha CAMPA) Level Amount	Percentage
1	**2**	**3**	**4**
6	**Utilisation of interest accrued on deposits in State Fund**		
6 (a)	**Not less than sixty percent**		
i	to offset the incremental cost of compensatory afforestation and penal compensatory afforestation at the increased wage rates	**500.00**	**21.28**
ii	to offset the incremental cost of catchment area treatment plan at the increased wage rates	**200.00**	**8.51**
iii	to offset the incremental cost of wildlife management plan at the increased wage rates	**50.00**	**2.13**
iv	for disbursement of salary and allowances of members and staffs, both regular and contractual, of the State Authority	**400.00**	**17.02**
v	for disbursement of sitting fees and allowances to nominated members of the State Authority	**100.00**	**4.26**
vi	Activities referred to in sub rules 2 and 3 of Rule 5 (including LiDAR Survey)	**900.00**	**38.30**
	Total for 6 (a)	**2150.00**	**91.49**
6 (b)	**Not more than forty percent**		
i	Management of office establishment	**50.00**	**2.13**
ii	Office equipment including computers and peripherals and its maintenance for the State Authority	**50.00**	**2.13**
iii	Hiring of staff cars for the use of the officers and officials of the State Authority	**50.00**	**2.13**
iv	Hiring of buildings on lease for the office establishment and residences of the officers of State Authority	**50.00**	**2.13**
	Total for 6 (b)	**200.00**	**8.51**
	Total	**2350.00**	**100.00**

Annexure-B

प्रधान मुख्य वनसंरक्षक (वनबल प्रमुख), महाराष्ट्र राज्य, नागपूर यांचे कार्यालय
अपर प्रधान मुख्य वनसंरक्षक व केंद्रस्थ अधिकरी, महाराष्ट्र राज्य, नागपूर, पहिला माळा, बी विंग, वनभवन, सिव्हील लाईन्स, नागपूर-४४०००१
दुरध्वनी क्र. (०७१२) २५५६९१६ ई मेल- apccfnodal@mahaforest.gov.in

ई-मेलव्दारे

क्रमांक कक्ष-१७/मुले/अंदाजपत्रक/प्र.क्र.४०/ **१३४३** /२०१९-२०
नागपूर-४४०००१, दि. **१९/११/२०१९**

प्रति,

अपर प्रधान मुख्य वनसंरक्षक (वन्यजीव) (सर्व)
मुख्य वनसंरक्षक (कांदळवन)
मुख्य वनसंरक्षक (प्रा.) (सर्व)
वनसंरक्षक सामाजिक वनीकरण (सर्व)

शुध्दीपत्रक

विषय:- वन (संवर्धन) अधिनियम १९८० अंतर्गत पर्यायी वनीकरणसाठी वर्ष २०१९-२० पासून नवीन नमुना दरपत्रके निश्चित करणेबाबत.

संदर्भ:- या कार्यालयाचे पत्र क्रमांक कक्ष-१७/नोसेल/मुले/अंदाजपत्रक/प्र.क्र.४०/११२७/१९-२०, दि.०४/१०/२०१९.

APCCF & CEO
Maha CAMPA

वरील विषयास अनुसरुन या कार्यालयाकडून जारी करण्यात आलेले पत्र क्र. कक्ष-१७ /मुले/ अंदाजपत्रक/प्र.क्र.४०/११२७/२०१९-२०, दिनांक ०४/१०/२०१९ अन्वये पर्यायी वनीकरणासाठी १० वर्षा करीता नमूना दरपत्रके पारीत करण्यात आलेले आहेत. सदर पत्रासोबत सहपत्रित "Compensatory Afforestation Plantation Models Rate@Rs. 339.61/-" या सदराखालील तक्त्यात रकाना क्रमांक ७ मध्ये त्रृटी निदर्शनास आली असल्याने खालीलप्रमाणे शुध्दीपत्रक जारी करण्यात येत आहे.

दिनांक ०४/१०/२०१९ च्या पत्रात नमूद आकडेवारी	सुधारीत आकडेवारी
(७)	(७)
Rs. 6,08,183.11 @Rs.547.42 per plant.	Rs. 6,08,183.11 @Rs.243.27 per plant.
Rs. 5,23,762.08 @Rs.471.43 per plant.	Rs. 5,23,762.08 @Rs.327.35 per plant.
Rs. 5,78,155.41 @Rs. 520.39 per plant.	Rs. 5,78,155.41 @Rs. 361.35 per plant.
Rs. 4,77,560.54 @Rs.429.85 per plant.	Rs. 4,77,560.54 @Rs.429.85 per plant.
Rs. 6,62,178.68 @Rs.596.02 per plant.	Rs. 6,62,178.68 @Rs.596.02 per plant.
Rs. 10,37,980.78 @Rs.934.28 per plant.	Rs. 10,37,980.78 @Rs.415.19 per plant.

संबंधित नस्तीला ठेवावे.

२.० त्या प्रमाणे उक्त पत्रासोबत सहपत्रित दोन्ही Recknor च्या शेवटच्या रकान्यातील नमूद शिर्षक "Amount to be recovered for 8 years including PPO-work period" याच्या ऐवजी "Total Amount to be recovered"असे वाचावे.

19/11/15

(संजीव गौड)
अपर प्रधान मुख्य वनसंरक्षक व केंद्रस्थ अधिकारी

प्रतिलीपी:- प्रधान सचिव (वने), महसूल व वनविभाग, मंत्रालय, मुंबई-३२
प्रतिलीपी:- प्रधान मुख्य वनसंरक्षक, (वन्यजीव) म.रा.नागपूर
प्रतिलिपी:- प्रधान मुख्य वनसंरक्षक (सामाजिक वनीकरण) म.रा. पूणे
प्रतिलिपी:- व्यवस्थापकीय संचालक, महाराष्ट्र वनविकास महामंडळ नागपूर
प्रतिलीपी:- प्रधान मुख्य वनसंरक्षक, (अर्थसंकल्प, नियोजन व विकास) म.रा. नागपूर
प्रतिलीपी:- अपर प्रधान मुख्य वनसंरक्षक तथा मुख्य कार्यकारी अधिकारी (महाकॅम्पा) म.रा. नागपूर
प्रतिलीपी:- मुख्य वनसंरक्षक (मुल्यांकन) म.रा. नागपूर

प्रधान मुख्य वनसंरक्षक, (वनबल प्रमुख) महाराष्ट्र राज्य, नागपूर
अपर प्रधान मुख्य वनसंरक्षक व केंद्रस्थ अधिकारी, महाराष्ट्र राज्य, नागपूर, पहिला माळा, वी विंग, वनभवन,
सिव्हील लाईन्स, नागपूर-४४०००१
दुरध्वनी क्र. (०७१२) २५५६९१६ ई मेल- apccfnodal@mahaforest.gov.in

तात्काळ
ई-मेलव्दारे

क्रमांक कक्ष-१७/मुले/अंदाजपत्रक/प्र.क्र.४०/1127/२०१९-२०
नागपूर-४४०००१, दिनांक : 04/10/2019

प्रति,

अपर प्रधान मुख्य वनसंरक्षक (वन्यजीव) (सर्व)
मुख्य वनसंरक्षक (कांदळवन)
मुख्य वनसंरक्षक (प्रादेशिक) (सर्व)
वनसंरक्षक सामाजिक वनीकरण (सर्व)

विषय:- वन (संवर्धन) अधिनियम १९८० अंतर्गत पर्यायी वनीकरणसाठी वर्ष २०१९-२० पासून नवीन नमुना दरपत्रके निश्चित करणेबाबत.

संदर्भ:- १) या कार्यालयाचे पत्र क्रमांक कक्ष-१७/नोसेल/मुले/अंदाजपत्रक/१२१३/२०१३-१४, दिनांक १३/११/२०१३
२) केंद्र शासनाचे पत्र क्रमांक एफ नं. ११-४२३/२०११-एफसी, दिनांक ०८/११/२०१७.
३) केंद्र शासन पत्र दिनांक २८/०३/२०१९ अन्वये जारी करण्यात आलेल्या Hand Book of Forest (Conservation) Act, 1980
४) या कार्यालयाचे पत्र क्रमांक कक्ष-१७/नोसेल/मुले/अंदाजपत्रक/प्र.क्र.४०/१५२/२०१९-२०, दिनांक ०६/०५/२०१९.

वन (संवर्धन) अधिनियम, १९८० अंतर्गत पर्यायी वनीकरणासाठी संदर्भिय पत्र क्र. १ अन्वये दिनांक ०१/०४/२०१३ पासून अमलात आलेले दर या कामासाठी गठित केलेल्या समितीच्या शिफारसी नुसार पर्जन्यमान, मातीची खोली व मजूर संख्या इत्यादीचा विचार करुन नमुना दरपत्रके १ ते ५ नुसार मंजूर करण्यात आली.

२. केंद्र शासनाने संदर्भिय पत्र क्र.२ नुसार निर्गमित केलेल्या मार्गदर्शक सुचनांचे अनुषंगाने पर्यायी वनिकरणासाठी दर हेक्टरी कमीत-कमी १००० रोपे लागवड करण्याची ७ ते १० वर्षापर्यंतची योजना असणे क्रमप्राप्त आहे. तसेच पर्यायी वनीकरणा अंतर्गत घेण्यात आलेल्या रोपवनांत चेनलिंक (Fencing) व्दारे संरक्षणाची तरतुद करण्या बाबत केंद्र शासनाने वेळोवेळी निर्देशित केले आहे.

३. उक्त पार्श्वभूमीत संदर्भ क्र. १ अन्वये मंजूर असलेल्या नमुना १ ते ५ नमुना दरपत्रकाचे पुर्नविलोकन व नविन दरपत्रके तयार करण्याची बाब विचाराधीन होती.

४. त्यास अनुसरुन अपर प्रधान मुख्य वनसंरक्षक तथा केंद्रस्थ अधिकारी, अपर प्रधान मुख्य वनसंरक्षक तथा मुख्य कार्यकारी अधिकारी (महाकॅम्पा) व मुख्य वनसंरक्षक (मुल्यांकन) यांनी संयुक्तरित्या विचारविमर्श करुन प्रस्तावित केलेली अंदाजपत्रके शासन निर्णय क्र.एमएससी-२०११/ प्र.क्र.१७५/ फ-५, दिनांक ३०/०९/२०११ अन्वये गठित अपर प्रधान मुख्य वनसंरक्षक (अर्थसंकल्प, नियोजन व विकास) म.रा. नागपूर यांचे अध्यक्षतेखाली समिती समोर विचारार्थ ठेवण्यात आले होते. सदर समितीने छाननी केल्यानंतर केलेल्या

Scanned by CamScanner

शिफारशीप्रमाणे नमुना अंदाजपत्रक क्र. १ ते ६ तसेच अनुषंगिक गुणक (Ready Recknor) यांना संदर्भिय पत्र क्रमांक ४ अन्वये मंजूरी प्रदान करण्यात आली.

५. परंतु संदर्भ पत्र क्रमांक ३ अन्वये केंद्र शासनाकडून जारी करण्यात आलेल्या Hand Book of the Forest (Conservation) Act, 1980 मधील प्रकरण क्रमांक २ (iii) (e) मधील तरतुदी खालील प्रमाणे आहे.

"Detail work schedule including year wise operations including sapling to be planted along with soil & moisture conservation, regeneration cleaning, silvicultural and other activity as prescribed in the working plan, species to be planted. including maintenance for 10 years and annual total costs in conformity with cost norms of the State." त्यामुळे १० वर्ष देखभालीची तरतूद अंर्तभूत करुन सुधारीत दर पत्रके तयार करणे आवश्यक आहे.

६. केंद्र शासनाने संदर्भ पत्र क्रमांक ३ अन्वये जारी केलेल्या मार्गदर्शक पुस्तीकेतील परिच्छेद २ (iii) (e) चा अनुसरुन १० वर्ष कालावधीसाठी रोपवन नमुण्यांचे अंदाजपत्रक व गुणक (Ready Recknor) मंजुर करुन पाठविण्यात येत आहे.

७. उक्त दरपत्रके व अनुषांगिक गुणक (Ready Recknor) हे तात्काळ प्रभावाने लागू होतील. सबब या पुढे ज्या प्रस्तावांना तत्वत: मान्यता प्राप्त होणार आहे, त्या प्रस्तावांतर्गत पर्यायी वनीकरणापोटी उक्त दरपत्रक व गुणकांप्रमाणे रक्कम वसुल करण्यात यावी तसेच पर्यायी वनीकरणाची कामे त्यानुसार केली जातील याची दक्षता घ्यावी.

सहपत्र :- वरीलप्रमाणे.

(यु.के.अग्रेवाल)
प्रधान मुख्य वनसंरक्षक
(वन बल प्रमुख)
महाराष्ट्र राज्य, नागपूर.

प्रतिलीपी:- प्रधान सचिव (वने), महसूल व वनविभाग, मंत्रालय, मुंबई-३२
प्रतिलीपी:- प्रधान मुख्य वनसंरक्षक, (वन्यजीव) म.रा.नागपूर
प्रतिलिपी:- प्रधान मुख्य वनसंरक्षक (सामाजिक वनीकरण) म.रा. पूणे
प्रतिलिपी:- व्यवस्थापकीय संचालक, महाराष्ट्र वनविकास महामंडळ नागपूर
प्रतिलीपी:- प्रधान मुख्य वनसंरक्षक, (अर्थसंकल्प, नियोजन व विकास) म.रा. नागपूर
प्रतिलीपी:- अपर प्रधान मुख्य वनसंरक्षक तथा मुख्य कार्यकारी अधिकारी (महाकॅम्पा) म.रा. नागपूर.
प्रतिलीपी:- मुख्य वनसंरक्षक (मुल्यांकन) महाराष्ट्र राज्य, नागपूर.

Scanned by CamScanner

Enclosure to Principal Chief Conservator of Forest (HoFF), M. S. Nagpur Letter No. Desk-17/ CA /Nodal Cell/CR-40/1127/2019-20, Date 04/10/2019

Compensatory Afforestation Plantation Models Rate @ Rs.339.61/-

Item	Technical Specification					Financial Specification / Rs.
	Model No.	No. of Seedlings / Ha.	Rainfall and Soil	Spacement Meter	Pit / Trench Size	
1	2	3	4	5	6	7
Compensatory Afforestation 6 Models with chain link fencing, maintenance for 10 years	1	2500 Not less than 9 months old seedlings	Rainfall above 1200 mm, good quality, well drained soil with depth above 30 cm.	2 x 2	0.45 x 0.45 x 0.45 M (2500 pits)	Rs. 6,08,183.11 @Rs.547.42 per plant.
	2	1600 Not less than 9 months old seedlings	Rainfall 800 mm to 1200 mm, medium quality, medium drained soil with depth upto 30 cm.	2.5 x 2.5	0.45 x 0.45 x 0.45 M (1600 pits)	Rs. 5,23,762.08 @Rs.471.43 per plant.
	3	1600 Not less than 9 months old seedlings	Rainfall 800 mm to 1200 mm, medium quality, medium drained soil with depth above 30 cm.	2.00	(i) Staggered Trenches of size – 2.00 x 0.60 x 0.45 M – 400 Beds.	Rs. 5,78,155.41 @Rs.520.39 per plant.
				1.00	(ii) Continuous Trenches of size - 2.00 x 0.60 x 0.45 M – 400 Beds.	
	4	1111 Not less than 9 months old seedlings	Rainfall upto 800 mm and medium quality, medium drained soil.	3 x 3	0.45 x 0.45 x 0.45 M (1111 pits)	Rs. 4,77,560.54 @Rs.429.85 per plant.
	5	1111 Not less than 18 months old seedlings	Rainfall less than 800 mm and medium quality, medium drained soil.	3 x 3	0.45 x 0.45 x 0.45 M (1111 pits) with watering	Rs. 6,62,178.68 @Rs.596.02 per plant.
	6	2500 Not less than 18 months old seedlings	Zudpi jungle and degraded areas having rainfall above 1200 mm, medium quality, medium drained soil	2 x 2	0.45 x 0.45 x 0.45 M (2500 pits) with watering	Rs. 10,37,980.78 @Rs.934.28 per plant.

Scanned by CamScanner

Enclosure to Principal Chief Conservator of Forest (HoFF), M. S. Nagpur Letter No. Desk-17/CA/Nodal Cell/CR-40/1127/2019-20, Date 04/10/2019

Ready Reckner for amount to be Deposited for Compensatory Afforestration for 2019-20 to 2028-29

Applicable For Model No. 1 to 5 escalation @ 5% per annum

Rates based on MODEL NO -5

S.No.	Financial Year	I	II	III	IV	V	VI	VII	VIII	IX	X	XI	XII	XIII	XIV	XV	XVI	XVII	XVIII	XIX	XX	Amount to be recovered for 8 years including PPO-work period	
																						Year of recovery	Amount (Rs.)
1	2019-20	267830	135885	99471	55787	14744	14744	14744	14744	14744	14744	14744										2019-20	662180
2	2020-21		281222	142679	104445	58576	15481	15480.9	15481	15481	15481.2	15481	15481									2020-21	695289
3	2021-22			295283	149813	109667	61505	16255	16255	16255	16255	16255	16255	16255.3								2021-22	730053
4	2022-23				310047	157304	115150	64580.4	17068	17068	17067.7	17068	17068	17068	17068							2022-23	766556
5	2023-24					325549	165169	120908	67809	17921	17921.1	17921	17921	17921.4	17921	17921						2023-24	804884
6	2024-25						341826	173428	126953	71200	18817.2	18817	18817	18817.2	18817	18817	18817					2024-25	845128
7	2025-26							358918	182099	133301	74759.9	19758	19758	19758	19758	19758	19758	19758				2025-26	887385
8	2026-27								376864	191204	139966	78498	20746	20746	20746	20746	20746	20746	20746			2026-27	931754
9	2027-28									395707	200764	146964	82423	21783.2	21783	21783	21783	21784	21784	21784		2027-28	978342
10	2028-29										415492	210802	154312	86543.9	22872	22872	22872	22872	22873	22873	22873	2028-29	1027259

Scanned by CamScanner

Enclosure to Principal Chief Conservator of Forest (HoFF), M. S. Nagpur Letter No. Desk-17/CA/Nodal Cell/CR-40/1127/2019-20, Date 04/10/2019

Ready

Reeknor for amount to be Deposited for Compensatory Afforestration for 2019-20 to 2028-29

Model No. 6 escalation @ 5% per annum

Rates based on MODEL NO -6																							
S.No.	Financial Year	I	II	III	IV	V	VI	VII	VIII	IX	X	XI	XII	XIII	XIV	XV	XVI	XVII	XVIII	XIX	XX	Amount to be recovered for 8 years including PPO-work period	
																						Year of recovery	Amount (Rs.)
1	2019-20	329808	291578	206362	107027	14744	14744	14744	14744	14744	14744	14744										2018-19	1037982
2	2020-21		346298	306157	216680	112378	15481	15480.9	15481	15481	15481.2	15481	15481									2019-20	1089881
3	2021-22			363613	321465	227514	117997	16255	16255	16255	16255	16255	16255	16255.3								2020-21	1144375
4	2022-23				381794	337538	238890	123897	17068	17068	17067.7	17068	17068	17068	17068							2021-22	1201594
5	2023-24					400884	354415	250834	130092	17921	17921.1	17921	17921	17921.4	17921	17921						2022-23	1261674
6	2024-25						420928	372136	263376	136597	18817.2	18817	18817	18817.2	18817	18817	18817					2023-24	1324757
7	2025-26							441974	390742	276545	143426	19758	19758	19758	19758	19758	19758	19758				2024-25	1390995
8	2026-27								464073	410280	290372	150598	20746	20745.9	20746	20746	20746	20746	20746			2025-26	1460545
9	2027-28									487277	430794	304891	158128	21783.2	21783	21783	21783	21784	21784	21784		2026-27	1533572
10	2028-29										511640	452333	320135	166034	22872	22872	22872	22872	22873	22873	22873	2027-28	1610251

Scanned by CamScanner

Enclosure to Principal Chief Conservator of Forest (HoFF), M. S. Nagpur Letter No. Desk-17/ CA /Nodal Cell/CR-40/1127/2019-20, Date 04/10/2019

Compensatory Afforestation Plantation Models Rate @ Rs.339.61/-

Item	Technical Specification					Financial Specification / Rs.
	Model No.	No. of Seedlings / Ha.	Rainfall and Soil	Spacement Meter	Pit / Trench Size	
1	2	3	4	5	6	7
Compensatory Afforestation Models with Chain link fencing, maintenance for 10 years	1	2500 Not less than 9 months old seedlings	Rainfall above 1200 mm, good quality, well drained soil with depth above 30 cm.	2 x 2	0.45 x 0.45 x 0.45 M (2500 pits)	Rs. 6,08,183.11 @Rs.547.42 per plant.
	2	1600 Not less than 9 months old seedlings	Rainfall 800 mm to 1200 mm, medium quality, medium drained soil with depth upto 30 cm.	2.5 x 2.5	0.45 x 0.45 x 0.45 M (1600 pits)	Rs. 5,23,762.08 @Rs.471.43 per plant.
	3	1600 Not less than 9 months old seedlings	Rainfall 800 mm to 1200 mm, medium quality, medium drained soil with depth above 30 cm.	2.00	(i) Staggered Trenches of size – 2.00 x 0.60 x 0.45 M – 400 Beds.	Rs. 5,78,155.41 @Rs.520.39 per plant.
				1.00	(ii) Continuous Trenches of size - 2.00 x 0.60 x 0.45 M – 400 Beds.	
	4	1111 Not less than 9 months old seedlings	Rainfall upto 800 mm and medium quality, medium drained soil.	3 x 3	0.45 x 0.45 x 0.45 M (1111 pits)	Rs. 4,77,560.54 @Rs.429.85 per plant.
	5	1111 Not less than 18 months old seedlings	Rainfall less than 800 mm and medium quality, medium drained soil.	3 x 3	0.45 x 0.45 x 0.45 M (1111 pits) with watering	Rs. 6,62,178.68 @Rs.596.02 per plant.
	6	2500 Not less than 18 months old seedlings	Zudpi jungle and degraded areas having rainfall above 1200 mm, medium quality, medium drained soil	2 x 2	0.45 x 0.45 x 0.45 M (2500 pits) with watering	Rs. 10,37,980.78 @Rs.934.28 per plant.

Enclosure to Principal Chief Conservator of For (HoFF), M. S. Nagpur Letter No. Desk-17/ Nodal Cell/CR-40/1127/2019-20, Date 04/10/2019

Rate Structure for Compensatory Afforestation

Model No.1

Model rate structure for plantation of tree species in areas having rainfall above 1200 mm, Good quality, well drained soil with depth above 30 cm

Spacement - 2m x 2m

Size of Pits - 0.45 x 0.45 x 0.45m

No. of Seedlings - 2500 per ha

Wage Rate-

Rs.339.61 per day.

(Amount in Rs.)

Sr.No	Particulars of works	Man days	Wages	Material supply	Total (Rs. Per Ha.)	Sanction Letter Dt. / Model No. / Item No.
A. Pre Monsoon Works PPO/PYO						
1	(a) Survey and demarcation	1.00	339.61	91.00	430.61	Letter Dt. 07/03/2018 Model No. 3A Item No. 1a
	(b) Preparation of treatment map (100 m x 50 m grid)	1.00	339.61	91.00	430.61	Item No. 1b
	(c) Digging trial pits of size 0.30x0.30x0.60 in corner of Grid.	0.40	135.84	0.00	135.84	Item No. 3
	(d) Fixing 60cm x 0.05cm x12cm cement pillars upto 30cm deep in corner of Grid, painting with Grid No. etc complete (3 pillars, Rs.75/- for each pillrs)	0.00	0.00	225.00	225.00	Item No. 2
	(e) Clearing of bushes and preparation of site (As per requirement)	10.00	3396.10	91.00	3487.10	Item No. 1c
2	Soil and moisture conservation works including collection of rubbles from areas upto 30 m etc	31.00	10527.91	0.00	10527.91	Item No. 6
3	Providing and fixing chain link fencing, 102 Rmt per ha (With one gate + two wickets gates for one site) (Rs.1494/- per Rmt of basic rate + 20% for transportation of ave. leadplus 20% for tribal/remote area (by tender process.) (Rs.1494+149+149=1792/- per Rmt (1.60	0.00	0.00	182865.60	182865.60	As per SSR rates 201718 Item No. 1744

	Rmt height with G.I. Chain link size 50mmx50m, 8 gauge thick and fixed 75mm above ground level complete as per SSR item No.1744 for 2017-18)					
4	Alignment of pits at 2m x 2m spacement. 2500 pits per Ha (0.25 per 100 pits and M&S @ Rs. 2.24 per 50 pits.	6.50	2207.47	112.00	2319.47	CAMPA rates model no. 1 item 4
5	Digging of pits of size 0.45 x 0.45 x 0.45 m (2500 pits per ha) 6.60 M.D per 100 pits. **Note :-** As per local conditions provision for mechanized digging can be made.	165.00	56035.65	0.00	56035.65	Item No. 5
6	Construction of 5.00 Rmt wide Inspection Path 1M.D. per 100 Rmt	1.00	339.61	0.00	339.61	Letter Dt. 07/03/2018 Irrigated & fencing Plantation Model no. 1 Item 6
7	Providing and fixing (4 feet x 3 feet) information board each per site	0.00	0.00	5000.00	5000.00	Letter Dt. 07/03/2018 Model No. 3A Item No. 12
8	Part Nursery cost of raising 3000 seedlings per ha (including 20% casualty replacement) in polygons of size 12.50 x 25.00 cm (Wages Rs.11.90 and M & S Rs.3.62 per plant)	105.14	35706.60	9651.84	45358.44	Item No. 10
Total		**321.04**	**109028.39**	**198127.44**	**307155.83**	
Contingency 3%			0	9214.68	9214.68	
Labour Welfare 4%			0	12286.23	12286.23	
Grand Total		**321.04**	**109028.39**	**198127.44**	**328656.74**	
B. First Year Operations						
1.	Part Nursery cost for maintenance of 3000 seedling per ha (Wages Rs.2.97, M & S Rs. 0.81)	26.29	8928.35	2412.96	11341.31	Letter Dt. 07/03/2018 Model No. 3A Item No. 1
2	Refilling of pits by good quality soil including application of single super phosphate (1.66 MD per 100 pits)	41.50	14093.82	1200.00	15293.82	CAMPA rates model no. 1 item 2
3	Transportation of 3000 seedlings from Nursery to plantation site including loading & unloading (0.14 M.D. per 100	4.20	1426.36	5460.00	6886.36	Letter Dt. 07/03/2018 Model No. 3A Item No. 3

	seedlings & M.S. Rs.1.82 Per seedling					
4	Planting of 2500 seedlings (1.1 M.D. per 100 seedlings)	27.50	9339.28	0.00	9339.28	Item No. 6
5	3 seedlings (1 Rmt circular) and 2 soil workings (4.00 M.D per 100 seedlings) fertilizer application Rs.0.82 per seedling	87.50	29715.88	2050.00	31765.88	Item No. 8
6	Casualty replacement (20% 500 Seedlings per ha.) (2 M.D. per 100 seedlings)	10.00	3396.10	0.00	3396.10	Item No. 7
7	Part Nursery cost for causality replacement in SYO (500 seedlings per ha.) (wages Rs. 11.90 and material supply Rs.3.62 total Rs.12.55 per seedling.)	17.52	5949.97	880.00	6829.97	CAMPA rates model no. 1 item 10
8	Watch and ward (10 months – 1 watcher per 10 ha)	30.00	10188.30	0.00	10188.30	Itme No. 8
9	Fire tracing	2.00	679.22	0.00	679.22	Item No. 9
Total		**246.51**	**83717.26**	**12002.96**	**95720.22**	
Contingency 3%				2871.61	2871.61	
Labour Welfare 4%				3828.81	3828.81	
Grand Total		**246.51**	**83717.26**	**12002.96**	**102420.64**	
C. Second Year Operations						
1	Part nursery cost for seedlings for causality replacement (500 seedlings per ha) labour rate @ Rs.2.97 and M.S. Rs.1.82 per seedlings.	4.38	1487.49	402.16	1889.65	Letter Dt. 07/03/2018 Model No. 3A Item No. 1
2	Transportation of 222 seedlings for causality replacement from nursery to plantation site (including loading and unloading) wages 0.14 M.D Per 100 Seedling & M.S. Rs.1.82 per seedlings	0.00	0.00	914.00	914.00	Item No. 2
3	Planting for casualty replacement 500 seedlings (2.00 M.D. per 100 seedlings)	10.00	3396.10	0.00	3396.10	Item No. 3
4	2 weedings and 1 soil working, with fertilizer application at 2.5 M.D. per 100 seedlings M.S. Rs. 0.82 per seedling	62.50	21225.63	2050.00	23275.63	Item No. 4
5	Watch and ward 12 months -1 watcher per 10.00 ha	36.50	12395.77	0.00	12395.77	Item No. 7
6	Fire tracing	2.00	679.22	0.00	679.22	Item No. 6
Total		**115.38**	**39184.21**	**3366.16**	**42550.37**	

Contingency 3%			0.00	1276.51	1276.51	
Labour Welfare 4%			0.00	1702.01	1702.01	
Grand Total		**115.38**	**39184.21**	**3366.16**	**45528.89**	
D. Third Year Operations						
1	1 weeding and 1 soil working (1.50 M.D per 100 seedlings) applying fertilizer @ Rs.0.82 per plant.	37.50	12735.38	0.00	12735.38	Letter Dt. 07/03/2018 Model No. 3A Item No. 2
2	Watch and ward 12 months 1 watcher per 10.00 ha	36.50	12395.77	0.00	12395.77	Item No. 4
3	Counting of survival percentage Grid wise and Species wise and to Note the same on Register in May and October.	2.00	679.22	25.00	704.22	Letter Dt. 07/03/2018 Model No. 1 Fencing & Irrigated Plantation Item No. 5
4	Fire tracing	2.00	679.22	0.00	679.22	Item No. 6
Total		**78.00**	**26489.58**	**25.00**	**26514.58**	
Contingency 3%			0.00	795.44	795.44	
Labour Welfare 4%			0.00	1060.58	1060.58	
Grand Total		**78.00**	**26489.58**	**25.00**	**28370.60**	
E. Fourth Year Operations						
1	Watch and ward 12 months 1 watcher per 10.00 ha	36.50	12395.77	0.00	12395.77	Letter Dt. 07/03/2018 Model No. 1 Fencing & Irrigated Plantation Item No. 1
2	Counting of survival percentage Grid wise and Species wise and to Note the same on Register in May and October.	2.00	679.22	25.00	704.22	Item No. 2
3	Fire tracing	2.00	679.22	0.00	679.22	Item No. 3
Total		**40.50**	**13754.21**	**25.00**	**13779.21**	
Contingency 3%			0.00	413.38	413.38	
Labour Welfare 4%			0.00	551.17	551.17	
Grand Total		**40.50**	**13754.21**	**25.00**	**14743.75**	
F. Fifth Year Operations						
1	Watch and ward 12 months 1 watcher per 10.00 ha	36.50	12395.77	0.00	12395.77	Letter Dt. 07/03/2018 Model No. 1 Fencing & Irrigated Plantation Item No. 1
2	Counting of survival percentage Grid wise	2.00	679.22	25.00	704.22	Item No. 2

	and Species wise and to Note the sam on Register in May and October.					
3	Fire tracing	2.00	679.22	0.00	679.22	Item No. 3
Total		**40.50**	**13754.21**	**25.00**	**13779.21**	
Contingency 3%			0.00	413.38	413.38	
Labour Welfare 4%			0.00	551.17	551.17	
Grand Total		**40.50**	**13754.21**	**25.00**	**14743.75**	
G. Sixth Year Operations						
1	Watch and ward 12 months 1 watcher per 10.00 ha	36.50	12395.77	0.00	12395.77	Letter Dt. 07/03/2018 Model No. 1 Fencing & Irrigated Plantation Item No. 1
2	Counting of survival percentage Grid wise and Species wise and to Note the same on Register in May and October.	2.00	679.22	25.00	704.22	Item No. 2
3	Fire tracing	2.00	679.22	0.00	679.22	Item No. 3
Total		**40.50**	**13754.21**	**25.00**	**13779.21**	
Contingency 3%			0.00	413.38	413.38	
Labour Welfare 4%			0.00	551.17	551.17	
Grand Total		**40.50**	**13754.21**	**25.00**	**14743.75**	
H. Seventh Year Operations						
1	Watch and ward 12 months 1 watcher per 10.00 ha	36.50	12395.77	0.00	12395.77	Letter Dt. 07/03/2018 Model No. 1 Fencing & Irrigated Plantation Item No. 1
2	Counting of survival percentage Grid wise and Species wise and to Note the same on Register in May and October.	2.00	679.22	25.00	704.22	Item No. 2
3	Fire tracing	2.00	679.22	0.00	679.22	Item No. 3
Total		**40.50**	**13754.21**	**25.00**	**13779.21**	
Contingency 3%			0.00	413.38	413.38	
Labour Welfare 4%			0.00	551.17	551.17	
Grand Total		**40.50**	**13754.21**	**25.00**	**14743.75**	
I. Eighth Year Operations						
1	Watch and ward 12 months 1 watcher per 10.00 ha	36.50	12395.77	0.00	12395.77	Letter Dt. 07/03/2018 Model No. 1 Fencing & Irrigated Plantation

						Item No. 1
2	Counting of survival percentage Grid wise and Species wise and to Note the same on Register in May and October.	2.00	679.22	25.00	704.22	Item No. 2
3	Fire tracing	2.00	679.22	0.00	679.22	Item No. 3
Total		**40.50**	**13754.21**	**25.00**	**13779.21**	
Contingency 3%			0.00	413.38	413.38	
Labour Welfare 4%			0.00	551.17	551.17	
Grand Total		**40.50**	**13754.21**	**25.00**	**14743.75**	
J. Nineth Year Operations						
1	Watch and ward 12 months 1 watcher per 10.00 ha	36.50	12395.77	0.00	12395.77	Letter Dt. 07/03/2018 Model No. 1 Fencing & Irrigated Plantation Item No. 1
2	Counting of survival percentage Grid wise and Species wise and to Note the same on Register in May and October.	2.00	679.22	25.00	704.22	Item No. 2
3	Fire tracing	2.00	679.22	0.00	679.22	Item No. 3
Total		**40.50**	**13754.21**	**25.00**	**13779.21**	
Contingency 3%			0.00	413.38	413.38	
Labour Welfare 4%			0.00	551.17	551.17	
Grand Total		**40.50**	**13754.21**	**25.00**	**14743.75**	
K. Tenth Year Operations						
1	Watch and ward 12 months 1 watcher per 10.00 ha	36.50	12395.77	0.00	12395.77	Letter Dt. 07/03/2018 Model No. 1 Fencing & Irrigated Plantation Item No. 1
2	Counting of survival percentage Grid wise and Species wise and to Note the same on Register in May and October.	2.00	679.22	25.00	704.22	Item No. 2
3	Fire tracing	2.00	679.22	0.00	679.22	Item No. 3
Total		**40.50**	**13754.21**	**25.00**	**13779.21**	
Contingency 3%			0.00	413.38	413.38	
Labour Welfare 4%			0.00	551.17	551.17	
Grand Total		**40.50**	**13754.21**	**25.00**	**14743.75**	

Abstract for Model No.1

(Amount in Rupees)

Sr. No.	Year of operation	Man days	Wages	Material supply	Total	Other expenses	Total amount
1	Pre Monsoon works	321.04	109028.39	198127.44	307155.83	21550.91	**328656.74**
2	First Year Operations	246.51	83717.26	12002.96	95720.22	6700.42	**102420.64**
3	Second Year Operations	115.38	39184.20	3366.16	42550.37	2978.53	**45528.89**
4	Third Year Operations	78.00	26489.58	25.00	26514.58	1856.02	**28370.60**
5	Fourth Year Operations	40.50	13754.21	25.00	13779.21	964.54	**14743.75**
6	Fifth Year Operations	40.50	13754.21	25.00	13779.21	964.54	**14743.75**
7	Sixth Year Operations	40.50	13754.21	25.00	13779.21	964.54	**14743.75**
8	Seventh Year Operations	40.50	13754.21	25.00	13779.21	964.54	**14743.75**
9	Eighth Year Operations	40.50	13754.21	25.00	13779.21	964.54	**14743.75**
10	Ninth Year Operations	40.50	13754.21	25.00	13779.21	964.54	**14743.75**
11	Tenth Year Operations	40.50	13754.21	25.00	13779.21	964.54	**14743.75**
	Total	**1044.43**	**354698.87**	**213696.56**	**568395.43**	**39787.68**	**608183.11**

Cost per plant Rs.547.42

Note:-

1. Rates of chain linked fencing derived from SSR-2017-18 with addition for area difference and transportation lead.
2. Plantation M.D. and M.S. component derived from rate structure as approved by PCCF (HoFF) M.S. vide letter No.Desk-1/EGS/CR-10/2282/2017-18/Nagpur, Dated 07/03/2018.

Enclosure to Principal Chief Conservator of For (HoFF), M. S. Nagpur Letter No. Desk-17/ /Nodal Cell/CR-40/1127/2019-20, Date 04/10/2019

Model Rate Structure for Compensatory Afforestation

Model No.2

Model rate structure for plantation of mixed tree species in areas with rainfall 800 mm to 1200 mm and medium quality, medium drained soil with soil depth upto 30.00 cm.

Spacement - 2.50 m x 2.50 m

Size of Pits - 0.45 x 0.45 x 0.45m

No. of Seedlings - 1600 per ha

Wage Rate-

Rs.339.61 per day.

(Amount in Rs.)

Sr.No	Particulars of works	Man days	Wages	Material supply	Total (Rs. Per Ha.)	Sanction Letter Dt. / Model No. / Item No.
A. Pre Monsoon Works PPO/PYO						
1	(a) Survey and demarcation	1.00	339.61	91.00	430.61	Letter Dt. 07/03/2018 Model No. 3A Item No. 1a
	(b) Preparation of treatment map (100 m x 50 m grid)	1.00	339.61	91.00	430.61	Item No. 1b
	(c) Digging trial pits of size 0.30x0.30x0.60 in corner of Grid.	0.40	135.84	0.00	135.84	Item No. 2
	(d) Fixing 60cm x 0.05cm x12cm cement pillars upto 30cm deep in corner of Grid, painting with Grid No. etc complete (3 pillars, Rs.75/- for each pillrs)	0.00	0.00	225.00	225.00	Item No. 3
	(e) Clearing of bushes and preparation of site (As per requirement)	10.00	3396.10	0.00	3396.10	Item No. 1c
2	Soil and moisture conservation works including collection of rubbles from areas upto 30 m etc	31.00	10527.91	0.00	10527.91	Item No. 4
3	Providing and fixing chain link fencing, 102 Rmt per ha (With one gate + two wickets gates for one site) (Rs.1494/- per Rmt of basic rate + 20% for transportation of ave. leadplus 20% for tribal/remote area (by tender process.) (Rs.1494+149+149=1792/- per Rmt (1.60 Rmt height with G.I. Chain	0.00	0.00	182865.60	182865.60	As per SSR rates 201718 Item No. 1744

	link size 50mmx50m, 8 gauge thick and fixed 75mm above ground level complete as per SSR item No.1744 for 2017-18)					
4	Alignment of pits at 2.5m x 2.5m spacement. 1600 pits per Ha (0.25 per 100 pits and M&S @ Rs. 2.24 per 50 pits.	4.16	1412.78	71.68	1484.46	CAMPA rates model no. 2 item 5
5	Digging of pits of size 0.45 x 0.45 x 0.45 m (1600 pits per ha) 6.60 M.D per 100 pits. **Note :-** As per local conditions provision for mechanized digging can be made.	105.60	35862.82	0.00	35862.82	Item No. 6
6	Construction of 5.00 Rmt wide Inspection Path 1M.D. per 100 Rmt	1.00	339.61	0.00	339.61	Letter Dt. 07/03/2018 Irrigated & fencing Plantation Model no. 1 Item 6
7	Enumeration of all valuable plant species at plantation site and grid wise counting and providing color band and recording the same in Register (0.75 M.D.) per 100 plants	0.75	254.71	25.00	279.71	Item No. 7
8	Providing and fixing (4 feet x 3 feet) information board each per site	0.00	0.00	5000.00	5000.00	Item No. 8
9	Part Nursery cost of raising 1920 seedlings per ha (including 20% casualty replacement) in polygons of size 12.50 x 25.00 cm (Wages Rs.11.90 and M & S Rs.3.62 per plant)	67.20	22821.80	6950.40	29772.20	CAMPA Model No. 2 Item No. 7
Total		**222.11**	**75430.79**	**195319.68**	**270750.47**	
Contingency 3%			0.00	8122.51	8122.51	
Labour Welfare 4%			**0.00**	10830.02	10830.02	
Grand Total		**222.11**	**75430.79**	**195319.68**	**289703.00**	
B. First Year Operations						
1.	Part Nursery cost for maintenance of 1920 seedling per ha (Wages Rs.3.77, M & S Rs. 0.44)	21.31	7237.09	704.00	7941.09	CAMPA Model No. 2 Item No. 1
2	Refilling of pits by good quality soil including application of single super phosphate (1.66 MD per 100 pits)	26.56	9020.04	1067.00	10087.04	Item No. 2
3	Transportation of 1920 seedlings from Nursery to plantation site including loading & unloading (0.14 M.D. per 100 seedlings & M.S. Rs.1.82 Per seedlings)	2.69	913.65	3494.40	4407.95	Item No. 4

4	Planting of 1600 seedlings (1(M.D. per 100 seedlings)	16.00	5433.76	0.(	5433.76	Item No. 5
5	3 seedlings (1 Rmt circular) and 2 soil workings (4.00 M.D per 100 seedlings) fertilizer application Rs.0.82 per seedling	64.00	21735.04	1312.00	23047.04	Item No. 6
6	Casualty replacement (20% 320 Seedlings per ha.) (2 M.D. per 100 seedlings)	6.40	2173.50	0.00	2173.50	Item No. 7
7	Part Nursery cost for causality replacement in SYO (320 seedlings per ha.) (wages Rs. 11.90 and material supply Rs.1.76 total Rs.10.56 per seedling.)	11.21	3807.03	563.20	4370.23	Item No. 8
8	Watch and ward (10 months – 1 watcher per 10 ha)	30.00	10188.30	0.00	10188.30	Item No. 9
9	Soil working for naturally grower plants and singling (1.15 M.D. per 100 plants)	1.15	390.55	10.00	400.55	Letter Dt. 07/03/2018 Irrigated & fencing Plantation Model no. 1 Item 10
10	Fire tracing	2.00	679.22	0.00	679.22	Item No. 12
Total		**181.32**	**61578.09**	**7150.60**	**68728.69**	
Contingency 3%			0.00	2061.88	2061.88	
Labour Welfare 4%			0.00	2749.18	2749.18	
Grand Total		**181.32**	**61578.09**	**7150.60**	**73539.69**	
C. Second Year Operations						
1	Part nursery cost for seedlings for causality replacement (320 seedlings per ha) labour rate @ Rs.3.77 and M.S. Rs.1.82 per seedlings.	3.55	1205.62	140.80	1346.42	CAMPA Model No. 2 Item No. 1
2	Transportation of 320 seedlings for causality replacement from nursery to plantation site (including loading and unloading) wages 0.14 M.D Per 100 Seedling & M.S. Rs.1.82 per seedlings	0.45	152.15	582.40	734.55	Item No. 2
3	Planting for casualty replacement 320 seedlings (2.00 M.D. per 100 seedlings)	6.40	2173.50	0.00	2173.50	Item No. 3
4	2 weedings and 1 soil working, with fertilizer application 2.5 M.D. per 100 seedlings at M.S. Rs. 0.82 per seedling	40.00	13584.40	720.00	14304.40	Item No. 4
5	Watch and ward 12 months -1 watcher per 10.00 ha	36.50	12395.77	0.00	12395.77	Item No. 5
6	Fire tracing	2.00	679.22	0.00	679.22	Item No. 6

Total		**88.90**	**30190.66**	**1443.20**	**31633.86**	
Contingency 3%			0.00	949.02	949.02	
Labour Welfare 4%			0.00	1265.35	1265.35	
Grand Total		**88.90**	**30190.66**	**1443.20**	**33848.23**	
D. Third Year Operations						
1	1 weeding and 1 soil working (1.50 M.D per 100 seedlings) applying fertilizer @ Rs.0.82 per plant.	24.00	8150.64	0.00	8150.64	CAMPA Model No. 2 Item No. 1
2	Watch and ward 12 months 1 watcher per 10.00 ha	36.50	12395.77	0.00	12395.77	Item No. 3
3	Counting of survival percentage Grid wise and Species wise and to Note the same on Register in May and October.	2.00	679.22	25.00	704.22	Letter Dt. 07/03/2018 Irrigated & fencing Plantation Model no. 1 Item 5
4	Fire tracing	2.00	679.22	0.00	679.22	Item No. 6
Total		**64.50**	**21904.85**	**25.00**	**21929.85**	
Contingency 3%			0.00	657.90	657.90	
Labour Welfare 4%			0.00	877.19	877.19	
Grand Total		**64.50**	**21904.85**	**25.00**	**23464.93**	
E. Fourth Year Operations						
1	Watch and ward 12 months 1 watcher per 10.00 ha	36.50	12395.77	0.00	12395.77	CAMPA Model No. 2 Item No. 1
2	Counting of survival percentage Grid wise and Species wise and to Note the same on Register in May and October.	2.00	679.22	25.00	704.22	Letter Dt. 07/03/2018 Irrigated & fencing Plantation Model no. 1 Item 2
3	Fire tracing	2.00	679.22	0.00	679.22	Item No. 6
Total		**40.50**	**13754.21**	**25.00**	**13779.21**	
Contingency 3%			0.00	413.38	413.38	
Labour Welfare 4%			0.00	551.17	551.17	
Grand Total		**40.50**	**13754.21**	**25.00**	**14743.75**	
F. Fifth Year Operations						
1	Watch and ward 12 months 1 watcher per 10.00 ha	36.50	12395.77	0.00	12395.77	CAMPA Model No. 2 Item No. 1
2	Counting of survival percentage Grid wise and Species wise and to Note the same on Register in May and October.	2.00	679.22	25.00	704.22	Letter Dt. 07/03/2018 Irrigated & fencing Plantation Model no. 1 Item 2

3	Fire tracing	2.00	679.22	0.0	679.22	Item No. 3
Total		**40.50**	**13754.21**	**25.00**	**13779.21**	
Contingency 3%			0.00	413.38	413.38	
Labour Welfare 4%			0.00	551.17	551.17	
Grand Total		**40.50**	**13754.21**	**25.00**	**14743.75**	
G. Sixth Year Operations						
1	Watch and ward 12 months 1 watcher per 10.00 ha	36.50	12395.77	0.00	12395.77	CAMPA Model No. 2 Item No. 1
2	Counting of survival percentage Grid wise and Species wise and to Note the same on Register in May and October.	2.00	679.22	25.00	704.22	Letter Dt. 07/03/2018 Irrigated & fencing Plantation Model no. 1 Item 5
3	Fire tracing	2.00	679.22	0.00	679.22	Item No. 6
Total		**40.50**	**13754.21**	**25.00**	**13779.21**	
Contingency 3%			0.00	413.38	413.38	
Labour Welfare 4%			0.00	551.17	551.17	
Grand Total		**40.50**	**13754.21**	**25.00**	**14743.75**	
H. Seventh Year Operations						
1	Watch and ward 12 months 1 watcher per 10.00 ha	36.50	12395.77	0.00	12395.77	CAMPA Model No. 2 Item No. 2
2	Counting of survival percentage Grid wise and Species wise and to Note the same on Register in May and October.	2.00	679.22	25.00	704.22	Letter Dt. 07/03/2018 Irrigated & fencing Plantation Model no. 1 Item 5
3	Fire tracing	2.00	679.22	0.00	679.22	Item No. 6
Total		**40.50**	**13754.21**	**25.00**	**13779.21**	
Contingency 3%			0.00	413.38	413.38	
Labour Welfare 4%			0.00	551.17	551.17	
Grand Total		**40.50**	**13754.21**	**25.00**	**14743.75**	
I. Eighth Year Operations						
1	Watch and ward 12 months 1 watcher per 10.00 ha	36.50	12395.77	0.00	12395.77	CAMPA Model No. 2 Item No. 2
2	Counting of survival percentage Grid wise and Species wise and to Note the same on Register in May and October.	2.00	679.22	25.00	704.22	Letter Dt. 07/03/2018 Irrigated & fencing Plantation Model no. 1 Item 5
3	Fire tracing	2.00	679.22	0.00	679.22	Item No. 6
Total		**40.50**	**13754.21**	**25.00**	**13779.21**	

Contingency 3%			0.00	413.38	413.38	
Labour Welfare 4%			0.00	551.17	551.17	
Grand Total		**40.50**	**13754.21**	**25.00**	**14743.75**	
J. Ninth Year Operations						
1	Watch and ward 12 months 1 watcher per 10.00 ha	36.50	12395.77	0.00	12395.77	CAMPA Model No. 2 Item No. 2
2	Counting of survival percentage Grid wise and Species wise and to Note the same on Register in May and October.	2.00	679.22	25.00	704.22	Letter Dt. 07/03/2018 Irrigated & fencing Plantation Model no. 1 Item 5
3	Fire tracing	2.00	679.22	0.00	679.22	Item No. 6
Total		**40.50**	**13754.21**	**25.00**	**13779.21**	
Contingency 3%			0.00	413.38	413.38	
Labour Welfare 4%			0.00	551.17	551.17	
Grand Total		**40.50**	**13754.21**	**25.00**	**14743.75**	
K. Tenth Year Operations						
1	Watch and ward 12 months 1 watcher per 10.00 ha	36.50	12395.77	0.00	12395.77	CAMPA Model No. 2 Item No. 2
2	Counting of survival percentage Grid wise and Species wise and to Note the same on Register in May and October.	2.00	679.22	25.00	704.22	Letter Dt. 07/03/2018 Irrigated & fencing Plantation Model no. 1 Item 5
3	Fire tracing	2.00	679.22	0.00	679.22	Item No. 6
Total		**40.50**	**13754.21**	**25.00**	**13779.21**	
Contingency 3%			0.00	413.38	413.38	
Labour Welfare 4%			0.00	551.17	551.17	
Grand Total		**40.50**	**13754.21**	**25.00**	**14743.75**	

Abstract for Model No.2

(Amount in Rupees)

Sr. No.	Year of operation	Man days	Wages	Material supply	Total	Other expenses	Total amount
1	Pre Monsoon works	222.11	75430.79	195319.68	270750.46	18952.53	**289703.00**
2	First Year Operations	181.32	61578.09	7150.60	68728.69	4811.01	**73539.69**
3	Second Year Operations	88.90	30190.66	1443.20	31633.86	2214.37	**33848.23**
4	Third Year Operations	64.50	21904.85	25.00	21929.85	1535.09	**23464.93**
5	Fourth Year Operations	40.50	13754.21	25.00	13779.21	964.54	**14743.75**
6	Fifth Year Operations	40.50	13754.21	25.00	13779.21	964.54	**14743.75**
7	Sixth Year Operations	40.50	13754.21	25.00	13779.21	964.54	**14743.75**
8	Seventh Year Operations	40.50	13754.21	25.00	13779.21	964.54	**14743.75**
9	Eighth Year Operations	40.50	13754.21	25.00	13779.21	964.54	**14743.75**
10	Ninth Year Operations	40.50	13754.21	25.00	13779.21	964.54	**14743.75**
11	Tenth Year Operations	40.50	13754.21	25.00	13779.21	964.54	**14743.75**
Total		**840.33**	**285383.79**	**204113.48**	**489497.27**	**34264.81**	**523762.08**

Cost per plant Rs.471.43

Note:-

1. Rates of chain linked fencing derived from SSR-2017-18 with addition for area difference and transportation lead.
2. Plantation M.D. and M.S. component derived from rate structure as approved by PCCF (HoFF) M.S. vide letter No.Desk-1/EGS/CR-10/2282/2017-18/Nagpur, Dated 07/03/2018.

Enclosure to Principal Chief Conservator of Forest (HoFF), M. S. Nagpur Letter No. Desk-17/CA/Nodal Cell/CR-40/1127/2019-20, Date 04/10/2019

Model Rate Structure for Compensatory Afforestation

Model No.3

Trench plantation

Model rate structure for plantation of mixed tree species in areas with rainfall 800 m to 1200 m and medium quality, medium drained soil with depth above 30 cm.

Trench Size - 2.00 x 0.60 x 0.45 mtr

400 Staggered Trench - 2 seedlings per trench (800 seedlings)

400 Continuous Trench - distance between seedlings 1 m (800 seedlings)

Wage Rate-

Rs.339.61 per day. No. of Seedlings - 1600 per ha

(Amount in Rs.)

Sr.No	Particulars of works	Man days	Wages	Material supply	Total (Rs. Per Ha.)	Sanction Letter Dt. / Model No. / Item No.
A. Pre Monsoon Works PPO/PYO						
1	(a) Survey and demarcation	1.00	339.61	91.00	430.61	Letter Dt. 07/03/2018 Model No. 3 Item No. 1a
	(b) Preparation of treatment map (100 m x 50 m grid)	1.00	339.61	91.00	430.61	Item No. 1b
	(c) Digging trial pits of size 0.30x0.30x0.60 in corner of Grid.	0.40	135.84	0.00	135.84	Item No. 3
	(d) Fixing 60cm x 0.05cm x12cm cement pillars upto 30cm deep in corner of Grid, painting with Grid No. etc complete (3 pillars, Rs.75/- for each pillrs)	0.00	0.00	225.00	225.00	Item No. 2
	(e) Clearing of bushes and preparation of site (As per requirement)	10.00	3396.10	0.00	3396.10	Item No. 1c
2	Soil and moisture conservation works including collection of rubbles from areas upto 30 m etc	31.00	10527.91	0.00	10527.91	Item No. 6
3	Providing and fixing chain link fencing, 102 Rmt per ha (With one gate + two wickets gates for one site) (Rs.1494/- per Rmt of basic rate + 20% for transportation of ave. leadplus 20% for tribal/remote	0.00	0.00	182865.60	182865.60	As per SSR rates 201718 Item No. 1744

	area (by tender process.) (Rs.1494+149+149=1792/- per Rmt (1.60 Rmt height with G.I. Chain link size 50mmx50m, 8 gauge thick and fixed 75mm above ground level complete as per SSR item No.1744 for 2017-18)					
4	Alignment of trenches 2 x 0.60 x 0.45 400 continuous + 400 staggered total 800 trenches @1M.D. per trench and RS.14.60 per 100 trench M.S.	8.00	2716.88	116.80	2833.68	Item No. 8
5	Digging of trenches 2 x 0.60 x 0.45 400 continuous trenches + 400 staggered trenches 27 M.D. per 100 trench.	216.00	73355.76	0.00	73355.76	Item No. 9
6	Construction of 5.00 Rmt wide Inspection Path 1M.D. per 100 Rmt	1.00	339.61	0.00	339.61	Letter Dt. 07/03/2018 Irrigated & fencing Plantation Model no. 1 Item 6
7	Enumeration of all valuable plant species at plantation site and grid wise counting and providing color band and recording the same in Register (0.75 M.D.) per 100 plants	0.75	254.71	25.00	279.71	Letter Dt. 07/03/2018 Model No. 3 Item No. 4
8	Providing and fixing (4 feet x 3 feet) information board each per site	0.00	0.00	5000.00	5000.00	Item No. 11
9	Part Nursery cost of raising 1920 seedlings per ha (including 20% casualty replacement) in polygons of size 12.50 x 25.00 cm (Wages Rs.11.90 and M & S Rs.3.62 per plant)	67.28	22848.96	6950.40	29799.36	Item No. 10
Total		**336.43**	**114254.99**	**195364.80**	**309619.79**	
Contingency 3%			0.00	9288.59	9288.59	
Labour Welfare 4%			0.00	12384.79	12384.79	
Grand Total		**336.43**	**114254.99**	**195364.80**	**331293.18**	
B. First Year Operations						
1.	Part Nursery cost for maintenance of 1920 seedling per ha (Wages Rs.3.77, M & S Rs. 0.81)	21.31	7232.09	155.20	7387.29	Letter Dt. 07/03/2018 Model No. 3 Item No. 1
2	Refilling of trenches by good quality soil	120.00	40753.20	2800.00	43553.20	Item No. 2

	including application of single super and fertilizer @ 1.75 per seedling phosphate (15 M.D. for 100 trenchs)					
3	Transportation of 1920 seedlings from Nursery to plantation site including loading & unloading (0.14 M.D. per 100 seedlings & M.S. Rs.1.82 Per seedlings)	2.69	913.55	3494.40	4407.95	Item No. 3
4	Planting of 1600 seedlings (1.0 M.D. per 100 seedlings)	16.00	5433.76	0.00	5433.76	Item No. 4
5	3 seedlings (1 Rmt circular) and 2 soil workings (4.00 M.D per 100 seedlings) fertilizer application Rs.0.82 per seedling	64.00	21735.04	1312.00	23047.04	Item No. 7
6	Casualty replacement (20% 320 Seedlings per ha.) (2 M.D. per 100 seedlings)	6.40	2173.50	0.00	2173.50	Item No. 5
7	Part Nursery cost for causality replacement in SYO (320 seedlings per ha.) (wages Rs. 8.93 and material supply Rs.3.62 total Rs.12.55 per seedling.)	8.41	2856.12	1158.40	4014.52	Item No. 1b
8	Watch and ward (9 months – 1 watcher per 10 ha)	23.40	7946.87	0.00	7946.87	Item No. 8
9	Fire tracing	2.00	679.22	0.00	679.22	Item No. 7 second year
Total		**264.21**	**89728.36**	**8920.00**	**98648.36**	
Contingency 3%			0.00	2959.45	2959.45	
Labour Welfare 4%			0.00	3945.93	3945.93	
Grand Total		**264.21**	**89728.36**	**8920.00**	**105553.74**	
C. Second Year Operations						
1	Part nursery cost for seedlings for causality replacement (320 seedlings per ha) labour rate @ Rs.3.77 and M.S. Rs.1.82 per seedlings.	3.55	1205.62	582.40	1788.02	Letter Dt. 07/03/2018 Model No. 3 Item No. 1
2	Transportation of 320 seedlings for causality replacement from nursery to plantation site (including loading and unloading) wages 0.14 M.D Per 100 Seedling & M.S. Rs.1.82 per seedlings	0.45	152.15	582.40	734.55	Item No. 2
3	Planting for casualty replacement 320 seedlings (2.00 M.D. per 100 seedlings)	6.40	2173.50	0.00	2173.50	Item No. 3

4	2 weedings and 1 soil working, with fertilizer application at 2.5 M.D. per 100 seedlings M.S. Rs. 0.82 per seedling	40.00	13584.40	1312.00	14896.40	Item No. 5
5	Watch and ward 9 months -1 watcher per 10.00 ha	31.20	10595.83	0.00	10595.83	Item No. 6
6	Fire tracing	2.00	679.22	0.00	679.22	Item No. 7
Total		**83.60**	**28390.72**	**2476.80**	**30867.52**	
Contingency 3%			0.00	926.05	926.03	
Labour Welfare 4%			0.00	1234.73	1234.70	
Grand Total		**83.60**	**28390.72**	**2476.80**	**33028.24**	
D. Third Year Operations						
1	1 weeding and 1 soil working (1.50 M.D per 100 seedlings) applying fertilizer @ Rs.0.82 per plant.	24.00	8150.64	1312.00	9462.64	Letter Dt. 07/03/2018 Model No. 3 Item No. 1
2	Watch and ward 9 months 1 watcher per 10.00 ha	31.20	10595.83	0.00	10595.83	Item No. 3
3	Counting of survival percentage Grid wise and Species wise and to Note the same on Register in May and October.	0.5	169.81	0.00	169.81	4th year Item No. 1
4	Fire tracing	2.00	679.22	0.00	679.22	Item No. 4
Total		**57.70**	**19595.50**	**1312.00**	**20907.50**	
Contingency 3%			0.00	627.23	627.22	
Labour Welfare 4%			0.00	836.30	836.30	
Grand Total		**57.70**	**19595.50**	**1312.00**	**22371.02**	
E. Fourth Year Operations						
1	Watch and ward 9 months 1 watcher per 10.00 ha	31.20	10595.83	0.00	10595.83	Letter Dt. 07/03/2018 Model No. 3 Item No. 2
2	Counting of survival percentage Grid wise and Species wise and to Note the same on Register in May and October.	0.50	169.81	25.00	194.81	Item No. 1
3	Fire tracing	2.00	679.22	0.00	679.22	Item No. 3
Total		**33.70**	**11444.86**	**25.00**	**11469.86**	
Contingency 3%			0.00	344.10	344.10	
Labour Welfare 4%			0.00	458.79	458.79	
Grand Total		**33.70**	**11444.86**	**25.00**	**12272.75**	
F. Fifth Year Operations						
1	Watch and ward 9 months 1 watcher per 10.00 ha	31.20	10595.83	0.00	10595.83	Letter Dt. 07/03/2018 Model

						No. 3 Item No. 2
2	Counting of survival percentage Grid wise and Species wise and to Note the same on Register in May and October.	0.50	169.81	25.00	194.81	Item No. 1
3	Fire tracing	2.00	679.22	0.00	679.22	Item No. 3
Total		**33.70**	**11444.86**	**25.00**	**11469.86**	
Contingency 3%			0.00	344.10	344.10	
Labour Welfare 4%			0.00	458.79	458.79	
Grand Total		**33.70**	**11444.86**	**25.00**	**12272.75**	
G. Sixth Year Operations						
1	Watch and ward 9 months 1 watcher per 10.00 ha	31.20	10595.83	0.00	10595.83	Letter Dt. 07/03/2018 Model No. 3 Item No. 2
2	Counting of survival percentage Grid wise and Species wise and to Note the same on Register in May and October.	0.50	169.81	25.00	194.81	Item No. 1
3	Fire tracing	2.00	679.22	0.00	679.22	Item No. 3
Total		**33.70**	**11444.86**	**25.00**	**11469.86**	
Contingency 3%			0.00	344.10	344.10	
Labour Welfare 4%			0.00	458.79	458.79	
Grand Total		**33.70**	**11444.86**	**25.00**	**12272.75**	
H. Seventh Year Operations						
1	Watch and ward 9 months 1 watcher per 10.00 ha	31.20	10595.83	0.00	10595.83	Letter Dt. 07/03/2018 Model No. 3 Item No. 2
2	Counting of survival percentage Grid wise and Species wise and to Note the same on Register in May and October.	0.50	169.81	25.00	194.81	Item No. 1
3	Fire tracing	2.00	679.22	0.00	679.22	Item No. 3
Total		**33.70**	**11444.86**	**25.00**	**11469.86**	
Contingency 3%			0.00	344.10	344.10	
Labour Welfare 4%			0.00	458.79	458.79	
Grand Total		**33.70**	**11444.86**	**25.00**	**12272.75**	
I. Eighth Year Operations						
1	Watch and ward 9 months 1 watcher per 10.00 ha	31.20	10595.83	0.00	10595.83	Letter Dt. 07/03/2018 Model No. 3 Item No. 2
2	Counting of survival percentage Grid wise and Species wise and to Note the same on	0.50	169.81	25.00	194.81	Item No. 1

	Register in May and October.					
3	Fire tracing	2.00	679.22	0.00	679.22	Item No. 3
Total		**33.70**	**11444.86**	**25.00**	**11469.86**	
Contingency 3%			0.00	344.10	344.10	
Labour Welfare 4%			0.00	458.79	458.79	
Grand Total		**33.70**	**11444.86**	**25.00**	**12272.75**	
J. Ninth Year Operations						
1	Watch and ward 9 months 1 watcher per 10.00 ha	31.20	10595.83	0.00	10595.83	Letter Dt. 07/03/2018 Model No. 3 Item No. 2
2	Counting of survival percentage Grid wise and Species wise and to Note the same on Register in May and October.	0.50	169.81	25.00	194.81	Item No. 1
3	Fire tracing	2.00	679.22	0.00	679.22	Item No. 3
Total		**33.70**	**11444.86**	**25.00**	**11469.86**	
Contingency 3%			0.00	344.10	344.10	
Labour Welfare 4%			0.00	458.79	458.79	
Grand Total		**33.70**	**11444.86**	**25.00**	**12272.75**	
K. Tenth Year Operations						
1	Watch and ward 9 months 1 watcher per 10.00 ha	31.20	10595.83	0.00	10595.83	Letter Dt. 07/03/2018 Model No. 3 Item No. 2
2	Counting of survival percentage Grid wise and Species wise and to Note the same on Register in May and October.	0.50	169.81	25.00	194.81	Item No. 1
3	Fire tracing	2.00	679.22	0.00	679.22	Item No. 3
Total		**33.70**	**11444.86**	**25.00**	**11469.86**	
Contingency 3%			0.00	344.10	344.10	
Labour Welfare 4%			0.00	458.79	458.79	
Grand Total		**33.70**	**11444.86**	**25.00**	**12272.75**	

Abstract for Model No.3

(Amount in Rupees)

Sr. No.	Year of operation	Man days	Wages	Material supply	Total	Other expenses	Total amount
1	Pre Monsoon works	336.43	114254.99	195364.80	309619.79	21673.39	**331293.18**
2	First Year Operations	264.21	89728.36	8920.00	98648.36	6905.39	**105553.74**
3	Second Year Operations	83.60	28390.72	2476.80	30867.52	2160.73	**33028.24**
4	Third Year Operations	57.70	19595.50	1312.00	20907.50	1463.52	**22371.02**
5	Fourth Year Operations	33.70	11444.86	25.00	11469.86	802.89	**12272.75**
6	Fifth Year Operations	33.70	11444.86	25.00	11469.86	802.89	**12272.75**
7	Sixth Year Operations	33.70	11444.86	25.00	11469.86	802.89	**12272.75**
8	Seventh Year Operations	33.70	11444.86	25.00	11469.86	802.89	**12272.75**
9	Eighth Year Operations	33.70	11444.86	25.00	11469.86	802.89	**12272.75**
10	Ninth Year Operations	33.70	11444.86	25.00	11469.86	802.89	**12272.75**
11	Tenth Year Operations	33.70	11444.86	25.00	11469.86	802.89	**12272.75**
	Total	**977.84**	**332083.56**	**208248.60**	**540332.16**	**37823.25**	**578155.41**

Cost per plant Rs.520.39

Note:-

1. Rates of chain linked fencing derived from SSR-2017-18 with addition for area difference and transportation lead.
2. Plantation M.D. and M.S. component derived from rate structure as approved by PCCF (HoFF) M.S. vide letter No.Desk-1/EGS/CR-10/2282/2017-18/Nagpur, Dated 07/03/2018.

Model Rate Structure for Compensatory Afforestation
Model No.4.

Model rate structure for plantation of mixed tree species having rainfall upto 800 mm and medium quality, medium drained soil.

Spacement - 3m x 3m

Size of Pits - 0.45 x 0.45 x 0.45m

No. of Seedlings - 1111 per ha

Wage Rate-

Rs.339.61 per day.

(Amount in Rs.)

Sr.No	Particulars of works	Man days	Wages	Material supply	Total (Rs. Per Ha.)	Sanction Letter Dt. / Model No. / Item No.
A. Pre Monsoon Works PPO/PYO						
1	(a) Survey and demarcation	1.00	339.61	91.00	430.61	Letter Dt. 07/03/2018 Irrigated & fencing Plantation Model no. 1 Item No. 1a
	(b) Preparation of treatment map (100 m x 50 m grid)	1.00	339.61	91.00	430.61	Item No. 1b
	(c) Digging trial pits of size 0.30x0.30x0.60 in corner of Grid.	0.40	135.84	0.00	135.84	Item No. 1c
	(d) Fixing 60cm x 0.05cm x12cm cement pillars upto 30cm deep in corner of Grid, painting with Grid No. etc complete (3 pillars, Rs.75/- for each pillrs)	0.00	0.00	225.00	225.00	Item No. 3
	(e) Clearing of bushes and preparation of site (As per requirement)	10.00	3396.10	91.00	3487.10	Item No. 1e
2	Soil and moisture conservation works including collection of rubbles from areas upto 30 m etc	31.00	10527.91	0.00	10527.91	Item No. 2
3	Providing and fixing chain link fencing, 102 Rmt per ha (With one gate + two wickets gates for one site) (Rs.1494/- per Rmt of basic rate + 20% for transportation of ave. leadplus 20% for tribal/remote	0.00	0.00	182865.60	182865.60	As per SSR rates 201718 Item No. 1744

	area (by tender process.) (Rs.1494+149+149=1792/- per Rmt (1.60 Rmt height with G.I. Chain link size 50mmx50m, 8 gauge thick and fixed 75mm above ground level complete as per SSR item No.1744 for 2017-18)					
4	Alignment of pits at 3m x 3m spacement. 1111 pits per 100 pits 0.26 M.D, M/S 8.18 per 100 pits	2.89	981.47	91.00	1072.47	Item No. 4
5	Digging of pits of size 0.45 x 0.45 x 0.45 m (1111 pits per ha) 6.60 M.D per 100 pits. **Note :-** As per local conditions provision for mechanized digging can be made.	73.33	24903.60	0.00	24903.60	Item No. 5
6	Construction of 5.00 Rmt wide Inspection Path 1M.D. per 100 Rmt	1.00	339.61	0.00	339.61	Item No. 6
7	Enumeration of all valuable plant species at plantation site and grid wise counting and providing color band and recording the same in Register (0.75 M.D.) per 100 plants	0.75	254.71	25.00	279.71	Item No. 7
8	Providing and fixing (4 feet x 3 feet) information board each per site	0.00	0.00	5000.00	5000.00	Item No. 8
9	Part Nursery cost of raising 1333 seedlings per ha (including 20% casualty replacement) in polygons of size 12.50 x 25.00 cm (Wages Rs.11.90 and M & S Rs.3.62 per plant)	46.70	15859.79	4798.80	20658.59	Item No. 9 20% casualty instead of 10%
Total		**168.07**	**57078.45**	**193278.40**	**250356.65**	
Contingency 3%			0.00	7510.70	7510.70	
Labour Welfare 4%			0.00	10014.27	10014.27	
Grand Total		**168.07**	**57078.45**	**193278.40**	**267881.62**	
B. First Year Operations						
1	Part Nursery cost for maintenance of 1333 seedling per ha Rs. 2.64 per seedling (Wages Rs.2.69, M & S Rs. 0.81)	14.80	5026.23	1079.73	6105.96	Letter Dt. 07/03/2018 Irrigated & fencing Plantation Model no. 1 Item No. 1

						20% instead of 10%
2	Refilling of pits by good quality soil including application of single super phosphate (1.66 MD per 100 pits)	18.44	6262.41	1944.25	8206.66	Item No. 2
3	Transportation of 1333 seedlings from Nursery to plantation site including loading & unloading (0.14 M.D. per 100 seedlings & M.S. Rs.1.82 Per seedlings)	1.87	635.07	2426.00	3061.07	Item No. 3 1333 plants instead of 1222
4	Planting of 1111 seedlings (1.0 M.D per 100 seedlings)	11.11	3773.07	0.00	3773.07	Item No. 4
5	3 seedlings (1 Rmt circular) and 2 soil workings (4.00 M.D per 100 seedlings) fertilizer application Rs.0.82 per seedling	44.44	15092.27	911.02	16003.29	Item No. 5
6	Casualty replacement (20% 222 Seedlings per ha.) (2 M.D. per 100 seedlings)	4.44	1507.87	0.00	1507.87	Item No. 6 20% instead of 10%
7	Part Nursery cost for causality replacement in SYO (222 seedlings per ha.) (wages Rs. 11.90 and material supply Rs.3.62 total Rs.12.55 per seedling.)	7.78	2642.17	803.64	3445.81	Item No. 8 20% instead of 10%
8	Watch and ward (9 months – 1 watcher per 10 ha)	27.38	9298.52	0.00	9298.52	Item No. 9
9	Soil working for naturally grower plants and singling (1.15 M.D. per 100 plants)	1.15	390.55	10.00	400.55	Item No. 10
10	Fire tracing	2.00	679.22	0.00	679.22	Item No. 12
Total		**133.41**	**45307.37**	**7174.64**	**52482.01**	
Contingency 3%			0.00	1574.46	1574.46	
Labour Welfare 4%			0.00	2099.28	2099.28	
Grand Total		**133.41**	**45307.37**	**7174.64**	**56155.75**	
C. Second Year Operations						
1	Part nursery cost for seedlings for causality replacement (222 seedlings per ha) labour rate @ Rs.3.77 and M.S. Rs.1.82 per seedlings.	2.46	835.44	404.04	1239.48	Letter Dt. 07/03/2018 Irrigated & fencing Plantation Model no. 1 Item No. 1 20% instead of 10%
2	Transportation of 222 seedlings for	0.31	105.28	404.04	509.32	Item No. 2

	causality replacement from nursery to plantation site (including loading and unloading) wages 0.14 M.D Per 100 Seedling & M.S. Rs.1.82 per seedlings					20% instead of 10% casualty
3	Planting for casualty replacement 222 seedlings (2.00 M.D. per 100 seedlings)	4.44	1507.87	0.00	1507.87	Item No. 3 20% instead of 10%
4	2 weedings and 1 soil working, with fertilizer application 2.5 M.D. per 100 seedlings at M.S. Rs. 0.82 per seedling	27.77	9430.97	911.02	10341.99	Item No. 4
5	Watch and ward 12 months -1 watcher per 10.00 ha	36.50	12395.77	0.00	12395.77	Item No. 6
7	Fire tracing	2.00	679.22	0.00	679.22	Item No. 8
Total		**73.48**	**24954.54**	**1719.10**	**26673.64**	
Contingency 3%			0.00	800.21	800.21	
Labour Welfare 4%			0.00	1066.95	1066.95	
Grand Total		**73.48**	**24954.54**	**1719.10**	**28540.80**	
D. Third Year Operations						
1	1 weeding and 1 soil working (1.50 M.D per 100 seedlings) applying fertilizer @ Rs.0.82 per plant.	16.67	5661.30	911.02	6572.32	Letter Dt. 07/03/2018 Irrigated & fencing Plantation Model no. 1 Item No. 1
2	Watch and ward 12 months 1 watcher per 10.00 ha	36.50	12395.77	0.00	12395.77	Item No. 3
3	Counting of survival percentage Grid wise and Species wise and to Note the same on Register in May and October.	2.00	679.22	25.00	704.22	Item No. 5
4	Fire tracing	2.00	679.22	0.00	679.22	Item No. 6
Total		**57.17**	**19415.50**	**936.02**	**20351.52**	
Contingency 3%			0.00	610.55	610.55	
Labour Welfare 4%			0.00	814.06	814.06	
Grand Total		**57.17**	**19415.50**	**936.02**	**21776.13**	
E. Fourth Year Operations						
1	Watch and ward 12 months 1 watcher per 10.00 ha	36.50	12395.77	0.00	12395.77	Letter Dt. 07/03/2018 Irrigated & fencing Plantation Model no. 1 Item No. 1

2	Counting of survival percentag[illegible]rid wise and Species wise and to Note the same on Register in May and October.	2.00	679.22	25[illegible]	704.22	Item No. 2
3	Fire tracing	2.00	679.22	0.00	679.22	Item No. 3
Total		**40.50**	**13754.21**	**25.00**	**13779.21**	
Contingency 3%			0.00	413.38	413.38	
Labour Welfare 4%			0.00	551.17	551.17	
Grand Total		**40.50**	**13754.21**	**25.00**	**14743.75**	
F. Fifth Year Operations						
1	Watch and ward 12 months 1 watcher per 10.00 ha	36.50	12395.77	0.00	12395.77	Letter Dt. 07/03/2018 Irrigated & fencing Plantation Model no. 1 Item No. 1
2	Counting of survival percentage Grid wise and Species wise and to Note the same on Register in May and October.	2.00	679.22	25.00	704.22	Item No. 2
3	Fire tracing	2.00	679.22	0.00	679.22	Item No. 3
Total		**40.50**	**13754.21**	**25.00**	**13779.21**	
Contingency 3%			0.00	413.38	413.38	
Labour Welfare 4%			0.00	551.17	551.17	
Grand Total		**40.50**	**13754.21**	**25.00**	**14743.75**	
G. Sixth Year Operations						
1	Watch and ward 12 months 1 watcher per 10.00 ha	36.50	12395.77	0.00	12395.77	Letter Dt. 07/03/2018 Irrigated & fencing Plantation Model no. 1 Item No. 1
2	Counting of survival percentage Grid wise and Species wise and to Note the same on Register in May and October.	2.00	679.22	25.00	704.22	Item No. 2
3	Fire tracing	2.00	679.22	0.00	679.22	Item No. 3
Total		**40.50**	**13754.21**	**25.00**	**13779.21**	
Contingency 3%			0.00	413.38	413.38	
Labour Welfare 4%			0.00	551.17	551.17	
Grand Total		**40.50**	**13754.21**	**25.00**	**14743.75**	
H. Seventh Year Operations						

1	Watch and ward 12 months 1 watcher per 10.00 ha	36.50	12395.77	0.00	12395.77	Letter Dt. 07/03/2018 Irrigated & fencing Plantation Model no. 1 Item No. 1
2	Counting of survival percentage Grid wise and Species wise and to Note the same on Register in May and October.	2.00	679.22	25.00	704.22	Item No. 2
3	Fire tracing	2.00	679.22	0.00	679.22	Item No. 3
Total		**40.50**	**13754.21**	**25.00**	**13779.21**	
Contingency 3%			0.00	413.38	413.38	
Labour Welfare 4%			0.00	551.17	551.17	
Grand Total		**40.50**	**13754.21**	**25.00**	**14743.75**	
I. Eighth Year Operations						
1	Watch and ward 12 months 1 watcher per 10.00 ha	36.50	12395.77	0.00	12395.77	Letter Dt. 07/03/2018 Irrigated & fencing Plantation Model no. 1 Item No. 1
2	Counting of survival percentage Grid wise and Species wise and to Note the same on Register in May and October.	2.00	679.22	25.00	704.22	Item No. 2
3	Fire tracing	2.00	679.22	0.00	679.22	Item No. 3
Total		**40.50**	**13754.21**	**25.00**	**13779.21**	
Contingency 3%			0.00	413.38	413.38	
Labour Welfare 4%			0.00	551.17	551.17	
Grand Total		**40.50**	**13754.21**	**25.00**	**14743.75**	
J. Ninth Year Operations						
1	Watch and ward 12 months 1 watcher per 10.00 ha	36.50	12395.77	0.00	12395.77	Letter Dt. 07/03/2018 Irrigated & fencing Plantation Model no. 1 Item No. 1
2	Counting of survival percentage Grid wise and Species wise and to Note the same on Register in May and October.	2.00	679.22	25.00	704.22	Item No. 2
3	Fire tracing	2.00	679.22	0.00	679.22	Item No. 3
Total		**40.50**	**13754.21**	**25.00**	**13779.21**	
Contingency 3%			0.00	413.38	413.38	

	Labour Welfare 4%		0.00	55 7	551.17	
	Grand Total	**40.50**	**13754.21**	**25.00**	**14743.75**	
K. Tenth Year Operations						
1	Watch and ward 12 months 1 watcher per 10.00 ha	36.50	12395.77	0.00	12395.77	Letter Dt. 07/03/2018 Irrigated & fencing Plantation Model no. 1 Item No. 1
2	Counting of survival percentage Grid wise and Species wise and to Note the same on Register in May and October.	2.00	679.22	25.00	704.22	Item No. 2
3	Fire tracing	2.00	679.22	0.00	679.22	Item No. 3
	Total	**40.50**	**13754.21**	**25.00**	**13779.21**	
	Contingency 3%		0.00	413.38	413.38	
	Labour Welfare 4%		0.00	551.17	551.17	
	Grand Total	**40.50**	**13754.21**	**25.00**	**14743.75**	

Abstract for Model No.4

(Amount in Rupees)

Sr. No.	Year of operation	Man days	Wages	Material supply	Total	Other expenses	Total amount
1	Pre Monsoon works	168.07	57078.45	193278.40	250356.65	17524.97	**267881.62**
2	First Year Operations	133.41	45307.37	7174.64	52482.01	3673.74	**56155.75**
3	Second Year Operations	73.48	24954.54	1719.10	26673.64	1867.15	**28540.80**
4	Third Year Operations	57.17	19415.50	936.02	20351.52	1424.61	**21776.13**
5	Fourth Year Operations	40.50	13754.21	25.00	13779.21	964.54	**14743.75**
6	Fifth Year Operations	40.50	13754.21	25.00	13779.21	964.54	**14743.75**
7	Sixth Year Operations	40.50	13754.21	25.00	13779.21	964.54	**14743.75**
8	Seventh Year Operations	40.50	13754.21	25.00	13779.21	964.54	**14743.75**
9	EighthYear Operations	40.50	13754.21	25.00	13779.21	964.54	**14743.75**
10	Nineth Year Operations	40.50	13754.21	25.00	13779.21	964.54	**14743.75**
11	Tenth Year Operations	40.50	13754.21	25.00	13779.21	964.54	**14743.75**
Total		**715.63**	**243035.10**	**203283.16**	**446318.26**	**31242.18**	**477560.54**

Cost per plant Rs.429.85

Note:-

1. Rates of chain linked fencing derived from SSR-2017-18 with addition for area difference and transportation lead.
2. Plantation M.D. and M.S. component derived from rate structure as approved by PCCF (HoFF) M.S. vide letter No.Desk-1/EGS/CR-10/2282/2017-18/Nagpur, Dated 07/03/2018.

Model Rate Structure for Compensatory Afforestation
Model No.5.

Fencing and Irrigated Plantations

Model rate structure for plantation of mixed tree species having rainfall less than 800 mm and medium quality, medium drained soil.

Spacement - 3m x 3m

Size of Pits - 0.45 x 0.45 x 0.45m

No. of Seedlings - 1111 per ha

Wage Rate-

Rs.339.61 per day.

(Amount in Rs.)

Sr.No	Particulars of works	Man days	Wages	Material supply	Total (Rs. Per Ha.)	Sanction Letter Dt. / Model No. / Item No.
A. Pre Monsoon Works PPO/PYO						
1	(a) Survey and demarcation	1.00	339.61	91.00	430.61	Letter Dt. 07/03/2018 Irrigated & fencing Plantation Model no. 1 Item No. 1a
	(b) Preparation of treatment map (100 m x 50 m grid)	1.00	339.61	91.00	430.61	Item No. 1b
	(c) Digging trial pits of size 0.30x0.30x0.60 in corner of Grid.	0.40	135.84	0.00	135.84	Item No. 1c
	(d) Fixing 60cm x 0.05cm x12cm cement pillars upto 30cm deep in corner of Grid, painting with Grid No. etc complete (3 pillars, Rs.75/- for each pillrs)	0.00	0.00	225.00	225.00	Item No. 1d
	(e) Clearing of bushes and preparation of site (As per requirement)	10.00	3396.10	91.00	3487.10	Item No. 1e
2	Soil and moisture conservation works including collection of rubbles from areas upto 30 m etc	31.00	10527.91	0.00	10527.91	Item No. 2
3	Providing and fixing chain link fencing, 102 Rmt	0.00	0.00	182865.60	182865.60	As per SSR rates

	per ha (With one gate + two wickets gates for one site) (Rs.1494/- per Rmt of basic rate + 20% for transportation of ave. leadplus 20% for tribal/remote area (by tender process.) (Rs.1494+149+149=1792/- per Rmt (1.60 Rmt height with G.I. Chain link size 50mmx50m, 8 gauge thick and fixed 75mm above ground level complete as per SSR item No.1744 for 2017-18)					201718 Item No. 1744
4	Alignment of pits at 3m x 3m spacement. 1111 pits per Ha (0.25 per 100 pits and M&S @ Rs. 2.24 per 50 pits.	2.78	944.12	49.77	993.89	Item No. 4
5	Digging of pits of size 0.45 x 0.45 x 0.45 m (1111 pits per ha) 6.60 M.D per 100 pits. **Note :-** As per local conditions provision for mechanized digging can be made.	73.33	24903.60	0.00	24903.60	Item No. 5
6	Construction of 5.00 Rmt wide Inspection Path 1M.D. per 100 Rmt	1.00	339.61	0.00	339.61	Item No. 6
7	Enumeration of all valuable plant species at plantation site and grid wise counting and providing color band and recording the same in Register (0.75 M.D.) per 100 plants	0.75	254.71	25.00	279.71	Item No. 7
8	Providing and fixing (4 feet x 3 feet) information board each per site	0.00	0.00	5000.00	5000.00	Item No. 8
9	Part Nursery cost of raising 1333 seedlings per ha (including 20% casualty replacement) in polygons of size 12.50 x 25.00 cm (Wages Rs.11.90 and M & S Rs.3.62 per plant)	46.71	15863.18	4825.46	20688.84	Item No. 9 20% Casualty replacement in place of 10%
Total		**167.97**	**57044.29**	**193263.83**	**250308.12**	
Contingency 3%			0.00	7509.23	7509.24	
Labour Welfare 4%			0.00	10012.31	10012.32	
Grand Total		**167.97**	**57044.29**	**193263.83**	**267829.69**	
B. First Year Operations						
1.	Part Nursery cost for maintenance of 1333 seedling per ha Rs. 3.77 per seedling (Wages Rs.2.69, M & S Rs. 0.81)	14.80	5062.23	1079.73	6105.96	Letter Dt. 07/03/2018 Irrigated & fencing Plantation Model no. 1 Item No. 1

						casualty replacement 20%
2	Refilling of pits by good quality soil including application of single super phosphate (1.66 MD per 100 pits)	18.44	6262.41	1944.25	8206.66	Item No. 2
3	Transportation of 1333 seedlings from Nursery to plantation site including loading & unloading (0.14 M.D. per 100 seedlings & M.S. Rs.1.82 Per seedlings)	1.87	635.07	2426.00	3061.07	Item No. 3 10% Extra Plants to be transported
4	Planting of 1111 seedlings (1.0 M.D per 100 seedlings)	11.11	3773.07	0.00	3773.07	Item No. 4
5	3 seedlings (1 Rmt circular) and 2 soil workings (4.00 M.D per 100 seedlings) fertilizer application Rs.0.82 per seedling	44.44	15092.27	911.02	16003.29	Item No. 5
6	Watering 1111 seedlings November and December 1 time each, January to March 2 times each per seedlings 5 litre water, purchase of 1111 plastic can of 5 litre / matka @Rs.25/- each and 100 litre capacity 11 drums @Rs.400/- each for supplying water and water supply at @Rs.0.05 per litre and wages for watering 1 M.D. for 150 seedlings.	59.25	20121.89	54395.00	74516.89	Item No. 7
7	Casualty replacement (20% 222 Seedlings per ha.) (2 M.D. per 100 seedlings)	4.44	1507.87	0.00	1507.87	Item No. 6 20% instead of 10%
8	Part Nursery cost for causality replacement in SYO (222 seedlings per ha.) (wages Rs. 11.90 and material supply Rs.3.62 total Rs.12.55 per seedling.)	7.77	2638.77	803.64	3442.41	Item No. 8 20% instead of 10%
9	Watch and ward (10 months – 1 watcher per 10 ha)	27.38	9298.52	0.00	9298.52	Item No. 9
10	Soil working for naturally grower plants and singling (1.15 M.D. per 100 plants)	1.15	390.55	10.00	400.55	Item No. 10
11	Fire tracing	2.00	679.22	0.00	679.22	Item No. 12
Total		**192.65**	**65425.87**	**61569.64**	**126995.51**	
Contingency 3%			0.00	3809.87	3809.87	
Labour Welfare 4%			0.00	5079.82	5079.82	
Grand Total		**192.65**	**65425.87**	**61569.64**	**135885.19**	
C. Second Year Operations						
1	Part nursery cost for seedlings for causality replacement (222 seedlings per ha) labour rate @	2.46	835.44	404.00	1239.44	Letter Dt. 07/03/2018

	Rs.3.77 and M.S. Rs.1.82 per seedlings.					Irrigated & fencing Plantation Model no. 1 Item No. 1 casualty replacement 20%
2	Transportation of 222 seedlings for causality replacement from nursery to plantation site (including loading and unloading) wages 0.14 M.D Per 100 Seedling & M.S. Rs.1.82 per seedlings	0.31	105.28	404.04	509.32	Item No. 2 20% instead of 10%
3	Planting for casualty replacement 222 seedlings (2.00 M.D. per 100 seedlings)	4.44	1507.87	0.00	1507.87	Item No. 3 20% instead of 10%
4	2 weedings and 1 soil working, with fertilizer application 2.5 M.D. per 100 seedlings at M.S. Rs. 0.82 per seedling	27.77	9430.97	911.02	10341.99	Item No. 4
5	Watering 1111 seedlings in November, December, January and June 1 time each and in February to May 2 times each total 12 times 5 litre per seedlings, replacing 10% plastic can / matka @Rs.25/- each replacing 111 cans / matka, supplying water @Rs.0.50/- per litre and watering 150 seedlings per M.D.	88.88	30184.54	36105.00	66289.54	Item No. 5
6	Watch and ward 12 months -1 watcher per 10.00 ha	36.50	12395.77	0.00	12395.77	Item No. 6
7	Fire tracing	2.00	679.22	0.00	679.22	Item No. 8
	Total	**162.36**	**55139.08**	**37824.06**	**92963.14**	
	Contingency 3%		0.00	2788.89	2788.89	
	Labour Welfare 4%		0.00	3718.53	3718.53	
	Grand Total	**162.36**	**55139.08**	**37824.06**	**99470.56**	
D. Third Year Operations						
1	1 weeding and 1 soil working (1.50 M.D per 100 seedlings) applying fertilizer @ Rs.0.82 per plant.	16.67	5661.30	911.02	6572.32	Letter Dt. 07/03/2018 Irrigated & fencing Plantation Model no. 1 Item No. 1
2	Watering 556 seedlings in November, December, January and June 1 time each and February to May 2 times each total 12 times per seedlings 5 litre, water supply @Rs.0.50/- litre and watering 150 seedlings per M.D.	44.48	15105.85	16680.00	31785.85	Item No. 2

3	Watch and ward 12 month watcher per 10.00 ha	36.50	12395.77	0.00	12395.77	Item No. 3
4	Counting of survival percentage Grid wise and Species wise and to Note the same on Register in May and October.	2.00	679.22	25.00	704.22	Item No. 5
5	Fire tracing	2.00	679.22	0.00	679.22	Item No. 6
Total		**101.65**	**34521.36**	**17616.02**	**52137.38**	
Contingency 3%			0.00	1564.12	1564.12	
Labour Welfare 4%			0.00	2085.50	2085.50	
Grand Total		**101.65**	**34521.36**	**17616.02**	**55787.00**	
E. Fourth Year Operations						
1	Watch and ward 12 months 1 watcher per 10.00 ha	36.50	12395.77	0.00	12395.77	Letter Dt. 07/03/2018 Irrigated & fencing Plantation Model no. 1 Item No. 1
2	Counting of survival percentage Grid wise and Species wise and to Note the same on Register in May and October.	2.00	679.22	25.00	704.22	Item No. 2
3	Fire tracing	2.00	679.22	0.00	679.22	Item No. 3
Total		**40.50**	**13754.21**	**25.00**	**13779.21**	
Contingency 3%			0.00	413.38	413.38	
Labour Welfare 4%			0.00	551.17	551.17	
Grand Total		**40.50**	**13754.21**	**25.00**	**14743.75**	
F. Fifth Year Operations						
1	Watch and ward 12 months 1 watcher per 10.00 ha	36.50	12395.77	0.00	12395.77	Letter Dt. 07/03/2018 Irrigated & fencing Plantation Model no. 1 Item No. 1
2	Counting of survival percentage Grid wise and Species wise and to Note the same on Register in May and October.	2.00	679.22	25.00	704.22	Item No. 2
3	Fire tracing	2.00	679.22	0.00	679.22	Item No. 3
Total		**40.50**	**13754.21**	**25.00**	**13779.21**	
Contingency 3%			0.00	413.38	413.38	
Labour Welfare 4%			0.00	551.17	551.17	
Grand Total		**40.50**	**13754.21**	**25.00**	**14743.75**	

G. Sixth Year Operations						
1	Watch and ward 12 months 1 watcher per 10.00 ha	36.50	12395.77	0.00	12395.77	Letter Dt. 07/03/2018 Irrigated & fencing Plantation Model no. 1 Item No. 1
2	Counting of survival percentage Grid wise and Species wise and to Note the same on Register in May and October.	2.00	679.22	25.00	704.22	Item No. 2
3	Fire tracing	2.00	679.22	0.00	679.22	Item No. 3
Total		**40.50**	**13754.21**	**25.00**	**13779.21**	
Contingency 3%			0.00	413.38	413.38	
Labour Welfare 4%			0.00	551.17	551.17	
Grand Total		**40.50**	**13754.21**	**25.00**	**14743.75**	
H. Seventh Year Operations						
1	Watch and ward 12 months 1 watcher per 10.00 ha	36.50	12395.77	0.00	12395.77	Letter Dt. 07/03/2018 Irrigated & fencing Plantation Model no. 1 Item No. 1
2	Counting of survival percentage Grid wise and Species wise and to Note the same on Register in May and October.	2.00	679.22	25.00	704.22	Item No. 2
3	Fire tracing	2.00	679.22	0.00	679.22	Item No. 3
Total		**40.50**	**13754.21**	**25.00**	**13779.21**	
Contingency 3%			0.00	413.38	413.38	
Labour Welfare 4%			0.00	551.17	551.17	
Grand Total		**40.50**	**13754.21**	**25.00**	**14743.75**	
I. Eighth Year Operations						
1	Watch and ward 12 months 1 watcher per 10.00 ha	36.50	12395.77	0.00	12395.77	Letter Dt. 07/03/2018 Irrigated & fencing Plantation Model no. 1 Item No. 1
2	Counting of survival percentage Grid wise and Species wise and to Note the same on Register in May and October.	2.00	679.22	25.00	704.22	Item No. 2
3	Fire tracing	2.00	679.22	0.00	679.22	Item No. 3

Total		**40.50**	**13754.21**	**25.00**	**13779.21**	
Contingency 3%			0.00	413.38	413.38	
Labour Welfare 4%			0.00	551.17	551.17	
Grand Total		**40.50**	**13754.21**	**25.00**	**14743.75**	
J. Ninth Year Operations						
1	Watch and ward 12 months 1 watcher per 10.00 ha	36.50	12395.77	0.00	12395.77	Letter Dt. 07/03/2018 Irrigated & fencing Plantation Model no. 1 Item No. 1
2	Counting of survival percentage Grid wise and Species wise and to Note the same on Register in May and October.	2.00	679.22	25.00	704.22	Item No. 2
3	Fire tracing	2.00	679.22	0.00	679.22	Item No. 3
Total		**40.50**	**13754.21**	**25.00**	**13779.21**	
Contingency 3%			0.00	413.38	413.38	
Labour Welfare 4%			0.00	551.17	551.17	
Grand Total		**40.50**	**13754.21**	**25.00**	**14743.75**	
K. Tenth Year Operations						
1	Watch and ward 12 months 1 watcher per 10.00 ha	36.50	12395.77	0.00	12395.77	Letter Dt. 07/03/2018 Irrigated & fencing Plantation Model no. 1 Item No. 1
2	Counting of survival percentage Grid wise and Species wise and to Note the same on Register in May and October.	2.00	679.22	25.00	704.22	Item No. 2
3	Fire tracing	2.00	679.22	0.00	679.22	Item No. 3
Total		**40.50**	**13754.21**	**25.00**	**13779.21**	
Contingency 3%			0.00	413.38	413.38	
Labour Welfare 4%			0.00	551.17	551.17	
Grand Total		**40.50**	**13754.21**	**25.00**	**14743.75**	

Abstract for Model No.5

(Amount in Rupees)

Sr. No.	Year of operation	Man days	Wages	Material supply	Total	Other expenses	Total amount
1	Pre Monsoon works	167.97	57044.29	193263.83	250308.12	17521.57	**267829.69**
2	First Year Operations	192.65	65425.87	61569.64	126995.57	8889.69	**135885.19**
3	Second Year Operations	162.36	55139.08	37824.06	92963.14	6507.42	**99470.56**
4	Third Year Operations	101.65	34521.36	17616.02	52137.38	3649.62	**55787.00**
5	Fourth Year Operations	40.50	13754.21	25.00	13779.21	964.54	**14743.75**
6	Fifth Year Operations	40.50	13754.21	25.00	13779.21	964.54	**14743.75**
7	Sixth Year Operations	40.50	13754.21	25.00	13779.21	964.54	**14743.75**
8	Seventh Year Operations	40.50	13754.21	25.00	13779.21	964.54	**14743.75**
9	Eighth Year Operations	40.50	13754.21	25.00	13779.21	964.54	**14743.75**
10	Ninth Year Operations	40.50	13754.21	25.00	13779.21	964.54	**14743.75**
11	Tenth Year Operations	40.50	13754.21	25.00	13779.21	964.54	**14743.75**
	Total	**908.13**	**308410.03**	**310448.55**	**618858.58**	**43320.10**	**662178.68**

Cost per plant Rs.596.02

Note:-

1. Rates of chain linked fencing derived from SSR-2017-18 with addition for area difference and transportation lead.
2. Plantation M.D. and M.S. component derived from rate structure as approved by PCCF (HoFF) M.S. vide letter No.Desk-1/EGS/CR-10/2282/2017-18/Nagpur, Dated 07/03/2018.

Enclosure to Principal Chief Conservator of Forest (HoFF), M. S. Nagpur Letter No. Desk-17/CA/Nodal Cell/CR-40/1127/2019-20, Date 04/10/2019

Model Rate Structure for Compensatory Afforestation

Model No.6

Irrigated Plantation

Model rate structure for plantation of tree species in degraded areas having medium quality, medium drained soil.

Spacement - 2m x 2m

Size of Pits - 0.45 x 0.45 x 0.45m

No. of Seedlings - 2500 per ha

Wage Rate-

Rs.339.61 per day.

(Amount in Rs.)

Sr.No	Particulars of works	Man days	Wages	Material supply	Total (Rs. Per Ha.)	Sanction Letter Dt. / Model No. / Item No.
A. Pre Monsoon Works PPO/PYO						
1	(a) Survey and demarcation	1.00	339.61	91.00	430.61	Letter Dt. 07/03/2018 Irrigated & Fencing Model No. 1 Item No. 1a
	(b) Preparation of treatment map (100 m x 50 m grid)	1.00	339.61	91.00	430.61	Item No. 1b
	(c) Digging trial pits of size 0.30x0.30x0.60 in corner of Grid.	0.40	135.84	0.00	135.84	Item No. 1c
	(d) Fixing 60cm x 0.05cm x12cm cement pillars upto 30cm deep in corner of Grid, painting with Grid No. etc complete (3 pillars, Rs.75/- for each pillrs)	0.00	0.00	225.00	225.00	Item No. 1d
	(e) Clearing of bushes and preparation of site (As per requirement)	10.00	3396.10	91.00	3487.10	Item No. 1e
2	Soil and moisture conservation works including collection of rubbles from areas upto 30 m etc	31.00	10527.91	0.00	10527.91	Item No. 2
3	Providing and fixing chain link fencing, 102 Rmt per ha (With one gate + two wickets gates for one site) (Rs.1494/- per Rmt of basic rate + 20% for transportation of ave. leadplus 20% for tribal/remote area (by tender process.) (Rs.1494+149+149=1792/- per Rmt (1.60 Rmt height with G.I. Chain link size	0.00	0.00	182865.60	182865.60	As per SSR rates 201718 Item No. 1744

	50mmx50m, 8 gauge thick and fixed 75mm above ground level complete as per SSR item No.1744 for 2017-18)					
4	Alignment of pits at 2m x 2m spacement. 2500 pits per Ha (0.25 per 100 pits and M&S @ Rs. 2.24 per 50 pits.	6.25	2122.56	112.00	2234.56	Letter Dt. 07/03/2018 Model No. 3A Item No. 8
5	Digging of pits of size 0.45 x 0.45 x 0.45 m (2500 pits per ha) 6.60 M.D per 100 pits. **Note :-** As per local conditions provision for mechanized digging can be made.	165.00	56035.65	0.00	56035.65	Letter Dt. 07/03/2018 Irrigated & fencing Plantation Model No. 1 Item 5 2500 pits instead of 1111 pits.
6	Construction of 5.00 Rmt wide Inspection Path 1M.D. per 100 Rmt	1.00	339.61	0.00	339.61	Item No. 6
7	Providing and fixing (4 feet x 3 feet) information board each per site	0.00	0.00	5000.00	5000.00	Item No. 8
8	Part Nursery cost of raising 3000 seedlings per ha (including 20% casualty replacement) in polygons of size 12.50 x 25.00 cm (Wages Rs.11.90 and M & S Rs.3.62 per plant)	105.00	35659.05	10860.00	46519.05	Letter Dt. 07/03/2018 Model No. 3A Item No. 10
Total		**320.65**	**108895.95**	**199335.60**	**308231.55**	
Contingency 3%			0.00	9246.95	9246.95	
Labour Welfare 4%			0.00	12329.26	12329.26	
Grand Total		**320.65**	**108895.95**	**199335.60**	**329807.76**	
B. First Year Operations						
1.	Part Nursery cost for maintenance of 3000 seedling per ha (Wages Rs.2.69, M & S Rs. 0.81)	33.30	11309.01	2430.00	13739.01	Letter Dt. 07/03/2018 Model No. 3A Item No. 1
2	Refilling of pits by good quality soil including application of single super phosphate (1.66 MD per 100 pits) @ 1.75	41.50	14093.82	4375.00	18468.82	Letter Dt. 07/03/2018 Irrigated & fencing Plantation Model No. 1 Item 2 2500 pits instead of 1111 pits
3	Transportation of 3000 seedlings from Nursery to plantation site including loading & unloading (0.14 M.D. per 100 seedlings &	4.20	1426.36	5460.00	6886.36	Letter Dt. 07/03/2018 Model No. 3A Item No. 3

	M.S. Rs.1.82 Per seedlings)					
4	Planting of 2500 seedlings (1.0 M.D. per 100 seedlings)	25.00	8490.25	0.00	8490.25	Item No. 6
5	3 seedlings (1 Rmt circular) and 2 soil workings (4.00 M.D per 100 seedlings) fertilizer application Rs.0.82 per seedling	100.00	33961.00	2050.00	36011.00	Item No. 8
6	Watering 2500 seedlings November and December 1 time each, January to March 2 times each per seedlings 5 litre water, purchase of 2500 plastic can of 5 litre / matka @Rs.25/- each and 100 litre capacity 25 drums @Rs.400/- each for supplying water and water supply at @Rs.0.05 per litre and wages for watering 1 M.D. for 150 seedlings.	133.33	45280.20	122500.00	167780.20	Letter Dt. 07/03/2018 Irrigated & fencing Plantation Model No. 1 Item 5 2500 plants instead of 1111 plants
7	Casualty replacement (20% 500 Seedlings per ha.) (2 M.D. per 100 seedlings)	10.00	3396.10	0.00	3396.10	Item No. 3 2500 Plants instead of 1111 Plants
8	Part Nursery cost for causality replacement in SYO (500 seedlings per ha.) (wages Rs. 11.90 and material supply Rs.3.62 total Rs.12.55 per seedling.)	17.50	5943.18	1810.00	7753.18	Item No. 8 500 Plants instead of 111 Plants
9	Watch and ward (9 months – 1 watcher per 10 ha)	27.38	9298.52	0.00	9298.52	Item No. 9
11	Fire tracing	2.00	679.22	0.00	679.22	Item No. 12
Total		**394.21**	**133877.66**	**138625.00**	**272502.66**	
Contingency 3%			0.00	8175.08	8175.08	
Labour Welfare 4%			0.00	10900.11	10900.11	
Grand Total		**394.21**	**133877.66**	**138625.00**	**291577.83**	
C. Second Year Operations						
1	Part nursery cost for seedlings for causality replacement (500 seedlings per ha) labour rate @ Rs.3.77 and M.S. Rs.1.82 per seedlings.	5.55	1884.84	910.00	2794.84	Letter Dt. 07/03/2018 Irrigated & fencing Plantation Model No. 1 Item 1 500 plants instead of 111 plants
2	Transportation of 500 seedlings for causality replacement from nursery to plantation site (including loading and unloading) wages 0.14 M.D Per 100 Seedling & M.S. Rs.1.82	0.70	237.73	910.00	1147.73	Item No. 2 500 plants instead of 111 plants

	per seedlings					
3	Planting for casualty replacement 500 seedlings (2.00 M.D. per 100 seedlings)	10.00	3396.10	0.00	3396.10	Item No. 3 500 plants instead of 111 plants
4	2 weedings and 1 soil working, with fertilizer application at 2.5 M.D. per 100 seedlings M.S. Rs. 0.82 per seedling	62.50	21225.63	2050.00	23275.63	Item No. 4 2500 plants instead of 1111 plants
5	Watering 2500 seedlings in November, December, January and June 1 time each and in February to May 2 times each total 12 times 5 litre per seedlings, replacing 10% plastic can / matka @Rs.25/- each replacing 250 cans, supplying water @Rs.0.50/- per litre and watering 150 seedlings per M.D.	200.00	67922.00	81250.00	149172.00	Item No. 5 2500 plants instead of 1111 plants
6	Watch and ward 12 months -1 watcher per 10.00 ha	36.50	12395.77	0.00	12395.77	Item No. 6
7	Fire tracing	2.00	679.22	0.00	679.22	Item No. 8
Total		**317.25**	**107741.27**	**85120.00**	**192861.27**	
Contingency 3%			0.00	5785.84	5785.84	
Labour Welfare 4%			0.00	7714.45	7714.45	
Grand Total		**317.25**	**107741.27**	**85120.00**	**206361.56**	
D. Third Year Operations						
1	1 weeding and 1 soil working (1.50 M.D per 100 seedlings) applying fertilizer @ Rs.0.82 per plant.	37.50	12735.38	2050.00	14785.38	Letter Dt. 07/03/2018 Irrigated & fencing Plantation Model No. 1 Item 1 2500 plants instead of 1111 plants
2	Watering 1250 seedlings in November, December, January and June 1 time each and February to May 2 times each total 12 times per seedlings 5 litre, water supply @Rs.0.50/- litre and watering 150 seedlings per M.D.	100.00	33961.00	37500.00	71461.00	Item No. 2 2500 plants instead of 1111 plants
3	Watch and ward 12 months 1 watcher per 10.00 ha	36.50	12395.77	0.00	12395.77	Item No. 3
4	Counting of survival percentage Grid wise and Species wise and to Note the same on Register in May and October.	2.00	679.22	25.00	704.22	Item No. 5
5	Fire tracing	2.00	679.22	0.00	679.22	Item No. 6

Total		**178.00**	**60450.58**	**39[illegible].00**	**100025.58**	
Contingency 3%			0.00	3000.02	3000.77	
Labour Welfare 4%			0.00	4000.02	4001.02	
Grand Total		**178.00**	**60450.58**	**39575.00**	**107027.37**	
E. Fourth Year Operations						
1	Watch and ward 12 months 1 watcher per 10.00 ha	36.50	12395.77	0.00	12395.77	Letter Dt. 07/03/2018 Irrigated & fencing Plantation Model No. 1 Item 1
2	Counting of survival percentage Grid wise and Species wise and to Note the same on Register in May and October.	2.00	679.22	25.00	704.22	Item No. 2
3	Fire tracing	2.00	679.22	0.00	679.22	Item No. 3
Total		**40.50**	**13754.21**	**25.00**	**13779.21**	
Contingency 3%			0.00	413.38	413.38	
Labour Welfare 4%			0.00	551.17	551.17	
Grand Total		**40.50**	**13754.21**	**25.00**	**14743.75**	
F. Fifth Year Operations						
1	Watch and ward 12 months 1 watcher per 10.00 ha	36.50	12395.77	0.00	12395.77	Letter Dt. 07/03/2018 Irrigated & fencing Plantation Model No. 1 Item 1
2	Counting of survival percentage Grid wise and Species wise and to Note the same on Register in May and October.	2.00	679.22	25.00	704.22	Item No. 2
3	Fire tracing	2.00	679.22	0.00	679.22	Item No. 3
Total		**40.50**	**13754.21**	**25.00**	**13779.21**	
Contingency 3%			0.00	413.38	413.38	
Labour Welfare 4%			0.00	551.17	551.17	
Grand Total		**40.50**	**13754.21**	**25.00**	**14743.75**	
G. Sixth Year Operations						
1	Watch and ward 12 months 1 watcher per 10.00 ha	36.50	12395.77	0.00	12395.77	Letter Dt. 07/03/2018 Irrigated & fencing Plantation Model No. 1 Item 1
2	Counting of survival percentage Grid wise and Species wise and to Note the same on Register in May and October.	2.00	679.22	25.00	704.22	Item No. 2
3	Fire tracing	2.00	679.22	0.00	679.22	Item No. 3

Total		**40.50**	**13754.21**	**25.00**	**13779.21**	
Contingency 3%			0.00	413.38	413.38	
Labour Welfare 4%			0.00	551.17	551.17	
Grand Total		**40.50**	**13754.21**	**25.00**	**14743.75**	
H. Seventh Year Operations						
1	Watch and ward 12 months 1 watcher per 10.00 ha	36.50	12395.77	0.00	12395.77	Letter Dt. 07/03/2018 Irrigated & fencing Plantation Model No. 1 Item 1
2	Counting of survival percentage Grid wise and Species wise and to Note the same on Register in May and October.	2.00	679.22	25.00	704.22	Item No. 2
3	Fire tracing	2.00	679.22	0.00	679.22	Item No. 3
Total		**40.50**	**13754.21**	**25.00**	**13779.21**	
Contingency 3%			0.00	413.38	413.38	
Labour Welfare 4%			0.00	551.17	551.17	
Grand Total		**40.50**	**13754.21**	**25.00**	**14743.75**	
I. Eighth Year Operations						
1	Watch and ward 12 months 1 watcher per 10.00 ha	36.50	12395.77	0.00	12395.77	Letter Dt. 07/03/2018 Irrigated & fencing Plantation Model No. 1 Item 1
2	Counting of survival percentage Grid wise and Species wise and to Note the same on Register in May and October.	2.00	679.22	25.00	704.22	Item No. 2
3	Fire tracing	2.00	679.22	0.00	679.22	Item No. 3
Total		**40.50**	**13754.21**	**25.00**	**13779.21**	
Contingency 3%			0.00	413.38	413.38	
Labour Welfare 4%			0.00	551.17	551.17	
Grand Total		**40.50**	**13754.21**	**25.00**	**14743.75**	
J. Ninth Year Operations						
1	Watch and ward 12 months 1 watcher per 10.00 ha	36.50	12395.77	0.00	12395.77	Letter Dt. 07/03/2018 Irrigated & fencing Plantation Model No. 1 Item 1
2	Counting of survival percentage Grid wise and Species wise and to Note the same on Register in May and October.	2.00	679.22	25.00	704.22	Item No. 2

3	Fire tracing	2.00	679.22	[illegible]0	679.22	Item No. 3
Total		**40.50**	**13754.21**	**25.00**	**13779.21**	
Contingency 3%			0.00	413.38	413.38	
Labour Welfare 4%			0.00	551.17	551.17	
Grand Total		**40.50**	**13754.21**	**25.00**	**14743.75**	
K. Tenth Year Operations						
1	Watch and ward 12 months 1 watcher per 10.00 ha	36.50	12395.77	0.00	12395.77	Letter Dt. 07/03/2018 Irrigated & fencing Plantation Model No. 1 Item 1
2	Counting of survival percentage Grid wise and Species wise and to Note the same on Register in May and October.	2.00	679.22	25.00	704.22	Item No. 2
3	Fire tracing	2.00	679.22	0.00	679.22	Item No. 3
Total		**40.50**	**13754.21**	**25.00**	**13779.21**	
Contingency 3%			0.00	413.38	413.38	
Labour Welfare 4%			0.00	551.17	551.17	
Grand Total		**40.50**	**13754.21**	**25.00**	**14743.75**	

Abstract for Model No.6

(Amount in Rupees)

Sr. No.	Year of operation	Man days	Wages	Material supply	Total	Other expenses	Total amount
1	Pre Monsoon works	320.65	108895.95	199335.60	308231.55	21576.21	**329807.76**
2	First Year Operations	394.21	133877.66	138625.00	272502.66	19075.19	**291577.83**
3	Second Year Operations	317.25	107741.27	85120.00	192861.27	13500.29	**206361.56**
4	Third Year Operations	178.00	60450.58	39575.00	100025.58	7001.79	**107027.37**
5	Fourth Year Operations	40.50	13754.21	25.00	13779.21	964.54	**14743.75**
6	Fifth Year Operations	40.50	13754.21	25.00	13779.21	964.54	**14743.75**
7	Sixth Year Operations	40.50	13754.21	25.00	13779.21	964.54	**14743.75**
8	Seventh Year Operations	40.50	13754.21	25.00	13779.21	964.54	**14743.75**
9	Eighth Year Operations	40.50	13754.21	25.00	13779.21	964.54	**14743.75**
10	Ninth Year Operations	40.50	13754.21	25.00	13779.21	964.54	**14743.75**
11	Tenth Year Operations	40.50	13754.21	25.00	13779.21	964.54	**14743.75**
	Total	**1493.61**	**507244.89**	**462830.60**	**970075.49**	**67905.28**	**1037980.78**

Cost per plant Rs.934.28

Note:-

1. Rates of chain linked fencing derived from SSR-2017-18 with addition for area difference and transportation lead.
2. Plantation M.D. and M.S. component derived from rate structure as approved by PCCF (HoFF) M.S. vide letter No.Desk-1/EGS/CR-10/2282/2017-18/Nagpur, Dated 07/03/2018.

Annexure- 64

F.No. 8-80/99-FC
Government of India
Ministry of Environment and Forests
F.C. Division

Paryavaran Bhawan,
CGO Complex, Lodhi Road,
New Delhi - 110 003.
Dated: 07.11.2001

To

The Secretary (Forests)- (All States/UTs).

Sub: Compensatory afforestation scheme- Regarding.

Sir,

A detailed compensatory afforestation scheme is central to any proposal that is submitted to Government of India for seeking diversion of forest land for non-forestry purpose under the provisions of Forest (Conservation) Act, 1980. The comprehensive scheme includes the year-wise phased forestry operations, details of species to be planted, maps of areas to be taken up for compensatory afforestation and a suitability certificate from afforestation/management point of view alongwith the cost structure of various operations.

It has come to the notice of the Ministry that compensatory afforestation schemes are being submitted at such rates which do not seem to be rational. The compensatory afforestation schemes no doubt has to be site specific and thus per hectare rate will vary from site to site. But it has been observed that at times schemes are being submitted with a cost structure which is at variance with the State norms for the same area. In this regard, it has been decided that henceforth the compensatory afforestation schemes which are being submitted alongwith the proposals for forestry clearance, must have technical and administrative approvals from the competent authority.

Kindly acknowledge receipt.

Yours faithfully,

(R.K. GUPTA)
Asstt. Inspector General of Forests

Copy to:-
1. All PCCF/Nodal Officers (All States/UTs).
2. All Regional Offices.
3. DIG(FC), Director(FC), AIGs(FC).

(R.K. GUPTA)
Asstt. Inspector General of Forests

Model Rate Structure for Compen.. restation
Model No.5

Model rate structure of intensive irrigated plantation on degraded areas with 18 month old seedlings (Voluntarily accepted by user agency. Undertaking of the user agency is mandatory.)

Spacement - 4.00 m x 4.00 m

Size of Pits - 0.60 x 0.60 x 0.60 m

No of Seedlings - 1500 per ha

Wage Rate-

Rs.251.21 per day

(Amount in Rs.)

Sr.No	Particulars of works	Man days	Wages	Material supply	Total (Rs. Per Ha.)
A. Pre Monsoon Works (PPO/PYO)					
1	a. Survey and demarcation	1.00	251.21	50.00	301.21
	b. Preparation of treatment map (100 m x 50 m grid)	1.00	251.21	50.00	301.21
	c. Clearing of bushes and preparation of site (As per requirement)	10.00	2512.10	50.00	2562.10
2	Soil and moisture conservation works including collection of rubbles from areas upto 30 m etc	31.00	7787.51	0.00	7787.51
3	Providing chain link fencing around plantation area. 102 rmt per ha Rs.2100 /- per rmt.	170.00	42705.70	171496.00	214201.70
4	Alignment of pits at 5m x 5m spacement. 625 pits per Ha (0.13 M.D. per 50 pits) M&S @ Rs. 2.24 per 50 pits.	1.62	406.96	28.00	434.96
5	Digging of pits of size 0.60 x 0.60 x 0.66 m (625 pits per ha) 36.26 M.D per 100 pits	207.88	52221.53	0.00	52221.53
	Total	422.50	106136.23	171674.00	277810.23
	Contingency 3%			8334.31	8334.31
	Labour Welfare 4%			11112.41	11112.41
	Grand Total	**422.50**	**106136.23**	**191120.72**	**297256.94**
B. First Year Operations					
1.	Purchase of selected seedlings 687 seedlings per ha (50% fruit bearing species) Rs.50 per seedlings	0.00	0.00	34350.00	34350.00
2	Refiling of pits by good quality soil (2.5 M.D per 50 pits) a) 30% soil replacement 40.50 cum per ha Rs. 300/- per cum. b) Filling 10% farm yard manure 13.50 cum per ha Rs.700/- per cum.	31.25	7850.31	21600.00	29450.31
3	Transport of seedlings from nursery to plantation site (including loading & unloading)	12.49	3137.61	3747.00	6884.61

	Wages 1.00 md per 55 seedlings and M& S Rs.300/- per 55 seedlings				
4	Planting of seedings 625 seedlings (2.01 M.D per 50 seedlings)	25.13	6312.91	0.00	6312.91
5	Planting for 10% casuality replacement (2.00 M.D per 100 seedlings)	1.26	316.52	0.00	316.52
6	3 weedings and 2 soil workings (3.40 M.D per 50 seedlings) fertilizer application Rs.0.45 per seedling	42.50	10676.43	281.00	10957.43
7	Watering the plants 4 times form oct to march (20 litre per 100 plants (As per Govt. Resolution EGS 28 dt.9/11/2009)	30.88	7757.36	0.00	7757.36
8	Water supply to plantation site by tanker and material supply as tanks, pipes etc.	0.00	0.00	10000.00	10000.00
9	Watch and ward (10 months – 1 watcher per 10 ha)	30.00	7536.30	0.00	7536.30
10	Fire tracing	2.00	502.42	0.00	502.42
11	Special technical works				7091.00
	Total	175.51	44089.87	69987.00	121158.87
	Contingency 3%		0.00	3634.77	3634.77
	Labour Welfare 4%		0.00	4846.35	4846.35
	Grand Total	**175.51**	**44089.87**	**78459.12**	**129639.99**
C. Second Year Operations					
1	3 weedings and soil workings (3.40 M.D per 50 plants) fertilizer application Rs. 0.45 per plant.	42.50	10676.43	281.00	10957.43
2	Watering the plants 5 times (20 litre per 100 plants) As per Govt. Resolution EGS 28 dt. 9/11/2009	38.50	9671.59	0.00	9671.59
3	Water supply to plantation site by tanker and material supply as tanks, pipes etc			10000.00	10000.00
4	Fire tracing	2.00	502.42	0.00	502.42
5	Special technical works				7091.00
	Total	83.00	20850.43	10281.00	38222.43
	Contingency 3%		0.00	1146.67	1146.67
	Labour Welfare 4%		0.00	1528.90	1528.90
	Grand Total	**83.00**	**20850.43**	**12956.57**	**40898.00**
D. Third Year Operations					
1	3 weedings and soil working (3.40 M.D per 50 plants) fertilizer application Rs. 0.45 per plants	42.50	10676.43	281.00	10957.43
2	Watering the plants 5 times (20 litre per 100 plants) As per Govt. Resolution EGS 28 dt. 9/11/2009	15.38	3836.61	0.00	3868.61
3	Water supply to plantation site by tanker and material supply as			10000.00	10000.00

	tanks, pipes etc				
4	Watch and ward 12 months 1 watcher per 10.00 ha	36.50	9169.17	0.00	9169.17
5	Fire tracing	2.00	502.42	0.00	502.42
	Total	96.38	24211.62	10281.00	34492.62
	Contingency 3%		0.00	1034.78	1034.78
	Labour Welfare 4%		0.00	1379.70	1379.70
	Grand Total	**96.38**	**24211.62**	**12695.48**	**36907.10**
E. Fourth Year Operations					
1	Fire Tracing	2.00	502.42	0.00	502.42
2	Watch and ward 12 months- 1 watcher per 10.00 ha	36.50	9169.17	0.00	9169.17
	Total	38.50	9617.59	0.00	9671.59
	Contingency 3%		0.00	290.15	290.15
	Labour Welfare 4%		0.00	386.86	386.86
	Grand Total	38.50	**9671.59**	**677.01**	**10348.60**
F. Fifth Year Operations					
1	Fire Tracing	2.00	502.42	0.00	502.42
2	Watch and ward 12 months- 1 watcher per 10.00 ha	36.50	9169.17	0.00	9169.17
	Total	38.50	9617.59	0.00	9671.59
	Contingency 3%		0.00	290.15	290.15
	Labour Welfare 4%		0.00	386.86	386.86
	Grand Total	**38.50**	**9671.59**	**677.01**	**10348.60**
G. Sixth Year Operations					
1	Fire Tracing	2.00	502.42	0.00	502.42
2	Watch and ward 12 months- 1 watcher per 10.00 ha	36.50	9169.17	0.00	9169.17
	Total	38.50	9617.59	0.00	9671.59
	Contingency 3%		0.00	290.15	290.15
	Labour Welfare 4%		0.00	386.86	386.86
	Grand Total	**38.50**	**9671.59**	**677.01**	**10348.60**
H. Seventh Year Operations					
1	Fire Tracing	2.00	502.42	0.00	502.42
2	Watch and ward 12 months- 1 watcher per 10.00 ha	36.50	9169.17	0.00	9169.17
	Total	38.50	9617.59	0.00	9671.59
	Contingency 3%		0.00	290.15	290.15
	Labour Welfare 4%		0.00	386.86	386.86
	Grand Total	**38.50**	**9671.59**	**677.01**	**10348.60**

Abstract for Model No.5

(Amount in Rupees)

Sr. No.	Year of operation	Man days	Wages	Material supply	Total	Other expenses	Total	Total amount (rounded off)
1	Pre Monsoon works	422.50	106136.23	171674.00	277810.23	19446.72	297256.94	297257
2	First Year Operations	175.51	44089.87	69978.00	121158.87	8481.12	129639.99	129640
3	SecondYear Operations	83.00	20850.43	10281.00	38222.43	2675.57	40898.00	40898
4	Third Year Operations	96.38	24211.62	10281.00	34492.62	2414.48	36907.10	36907
5	Fourth Year Operations	38.50	9671.59	0.00	9671.59	677.01	10348.60	10349
6	Fifth Year Operations	38.50	9671.59	0.00	9671.59	677.01	10348.60	10349
7	Sixth Year Operations	38.50	9671.59	0.00	9671.59	677.01	10348.60	10349
8	Seventh Year Operations	38.50	9671.59	0.00	9671.59	677.01	10348.60	10349
Total		**931.39**	**233974.48**	**262214.00**	**510370.48**	**35725.93**	**546096.42**	**546096**

Cost per plant Rs.873.75

Note :- 1. The rates indicated are as per item No.3 of Government of Maharashtra resolution No. MREGS-2011/F.No. 85/ EGS-1, Planning department, EGS division dt.3/11/2011. The rates for item No. 4& 5 of premonsoon works and item No.2 of FYO are as per model No.7.

2. Special technical works includes application of improved technology in nursery & plantations, irrigation as per requirement and site condition, additional SMC works, creation of waterholes, Soil replacement in pits, application of biofertilizers, micro nutrients etc.

MODEL RATE STRUCTURE FOR COMPENSATORY AFFORESTATION

(1500 Plants/Ha.)

(10 Yrs. Plan) **Daily Wage Rate - Rs.71.38 Per Day**

Sr. No.	Particulars Works		Mandays	Wages (Rs.)	Material Supply	Total Cost/ ha.	Remarks
1	2		3	4	5	6	7
1)	(a)	Survey of area	10.00	714	500 (L.S.)	1214	It shall include the cost of Survey/ Demarcation.
	(b)	Laying of grids at 100 mt. x 50 mt. and fixing of grid pillars.					Preparation of Map (Grid, Treatment Maps etc.)
	(c)	Preparation of grid map					Laying of Gridlines
	(d)	Digging of trial pits (20 cm x 20 cm x 60cm					Fixing of Grid Markers.
	(e)	Preparation of treatment map					Cost of record - including plantation journal, Grid Registers and survey equipments, cost of paint etc.
	(f)	Cost of record					
	(g)	Cost of plantation journal					
2)		Soil and moisture conservation works	116.79	8336	-	8336	The structures like gully plugging, check-dam, vegetative structures, gabion structures, CCTs, may be taken up after preparation of site specific estimates to be approved by Deputy Conservator of Forests.
3)		Planting it two phases 1500 Plants/Ha. **Phase I** - 400 plants of local herbs, shrubs, trees, grass beds **Phase II** - 1100 plants per ha. after four years. - Main indigenous, trees, fruit species.	233.57	16672	1400	18072	i) According to the guidelines of Govt of India vide their letter No.11-9/98-FC, dated 23/4/2004 planting should be done in two phases. In first phase after closure of area, local shrubs, herbs, and indigenous species should be encouraged and after assessing the success of involvement of local people in protection and after

							assessing the success in curbing the local biotic interferences next phase should be initiated. Hence after four years of closure of area after provisions of SMC and planting of around 400 species (per ha.) of local trees, herbs, shrubs and grass beds, area become ready for Phase-II. In Phase-II tree species of forestry to the extent of 1100 plants per ha. should be taken. ii) The Mandays are derived from old wage structure after reducing the plant population from 2500 to 1500.
4)		Fencing	47.72	3406	100	3506	It can be the combination of TCM/Vegetative fencing. Local involvement has to be encouraged for protection works. It should be within the fixed amount.
5)		Protection	125.4	8951		8951	Lumpsum amount. It should preferably be through village communities under the modality of Joint Forest Management.
6)		Monitoring & Evaluation-3%	16.86	1203		1203	Lumpsum through Departmental or outside agency.
7)		Administration cost	4015	(Lump -sum)		4015	Being charged as per guidelines of Govt. of India vide No.F.No. 11-30/ 96-FC, Dated 10.12. 2001. The distribution of this component will be done by Principal Chief Conservator of Forests, M.S. separately on annual basis.
		Total	550.34	43297	2000	45297	

पाणी पुरवठा सुविधा असलेले रोपवन अंदाजपत्रक

नमुना अंदाजपत्रक - २

रोप संख्या : ६२५ प्रति हेक्टर + २०० रोपांची नैसर्गिक पुर्ननिर्मिती कामे			खडयाचे अंतर : ४ मी. X ४ मी.			
खडयांचा आकार : ०.४५ x ०.४५ x ०.४५ मी.			दैनंदिन मजुरी दर : रूपये ३०८/-			
अ.क्र.	कामाची बाब		१ हेक्टर साठी			
			मनुष्य दिवस	मजुरी	साहित्य	एकूण रक्कम
अ.	पुर्व पावसाळी कामे					
१	अ) मोजणी व सिमांकन करणे (चार लहान दगडांची रास उभारण्यासह)		१.००	३०८.००	९१.००	३९९.००
	ब) १०० x ५० मिटरवर ग्रिड टाकणे व उपचार नकाशा तयार करणे		१.००	३०८.००	९१.००	३९९.००
	क) ग्रिडच्या कोप-यात ०.३० X ०.३० X ०.६० मि. आकाराचे चाचणी खड्डे खोदणे		०.४०	१२३.२०	०.००	१२३.२०
	ड) ६० सेंमी X ५ सेंमी X १२ सेंमी आकाराचे सिमेंट पिलर ग्रिडच्या कोप-यात ३० सेंमी खोलीत लावणे, सिमेंट पिलरला रंग देणे व त्यावर ग्रिड क्रमांक लिहिणे (३ पिलर, रुपये ७५ प्रती पिलर प्रमाणे)		०.००	०.००	२२५.००	२२५.००
	इ) जागेवरील अनावश्यक झाडेझुडपे काढून जमिन तयार करणे.(आवश्यकतेनुसार)		१०.००	३०८०.००	९१.००	३१७१.००
२	रोपवन क्षेत्रामध्ये जास्तीत जास्त क्षेत्रावर मृद संधारणाची कामे आवश्यकतेनुसार करणे (उदा. अनगड दगडी बांध गलि प्लगिंग, तुटक चर इ.)		३१.००	९५४८.००	०.००	९५४८.००
३	चेन लिंक कुंपण तयार करणे, १०२ र.मी. प्रती हे. (एका रोपवन स्थळाकरीता एक गेटसह) (रु. १०००/- प्रती र.मी. प्रमाणे इ निविदाद्वारे)(उंची १.६५ मि., १० गेजची तार, जाळीचा आकार १० से.मी. X १० से.मी., २ पोल मधील अंतर २.५ मि.)		०.००	०.००	१०२०००.००	१०२०००.००
४	खड्डयांची आखणी करणे : प्रती हेक्टर ६२५ खड्डे, आकारमान ०.४५ मी. X ०.४५ मी. X ०.४५ मी. व ४ मी. X ४ मी. अंतरावर - सा.पु. रू. ८.१८ प्रती १०० खड्डयांसाठी व ०.२६ म.दि. प्रती १०० खड्डे याप्रमाणे		१.६३	५०२.०४	५१.२०	५५३.२४
५	खड्डे खोदणे : ०.४५ मी. X ०.४५ मी. X ०.४५ मी. आकाराचे ६२५ खड्डे खोदणे. प्रती १०० खड्डे ६.६० म.दि. प्रमाणे		४१.२५	१२७०५.००	०.००	१२७०५.००
६	रोपवनात ५ मि. रुद निरिक्षण पथ तयार करणे, १ मनुष्य दिवस प्रती १०० मि. प्रती. हे. प्रमाणे .		१	३०८.००	०.००	३०८.००
७	रोपवन क्षेत्रातील सर्व मौल्यवान नैसर्गिक रोपांना उपचार देण्यासाठी त्यांचे ग्रोड निहाय व प्रजातीनिहायमोजणी करणे व रोपना रंग पट्टी लावुन त्याची रजिस्टर मध्ये नोंद घेणे (०.७५ म दि. प्रती १०० रोपे)		१.५	४६२.००	५०.००	५१२.००
८	रोपवनाचा माहिती फलक उभारणे (४ X ३ फुट),१ नग		०	०.००	५०००.००	५०००.००
९	रोपवाटीकेचा अंशत: खर्च ६२५ रोपे लागवडीसाठी, अधिक १० टक्के रोपे मरअळी भरणेसाठी. एकूण ६८८ रोपे (१२.५० X २५ से.मी. आकाराच्या पिशवीत) तयार करणे, ऑक्टोबर ते मार्च प्रती रोप रूपये १२.५५ प्रमाणे (प्रती रोप मजुरी रू. ८.९३ व साहित्य पुरवठा रू. ३.६२ प्रती रोप)		१९.९४	६१४१.५२	२४९०.५६	८६३२.०८
	एकूण		१०८.७२	३३४८५.७६	११००८९.७६	१४३५७५.५२
	आकस्मिक खर्च ३.० टक्के				४३०७.२७	४३०७.२७
	मजुर कल्याण ४.० टक्के				५७४३.०२	५७४३.०२
	एकूण पुर्व पावसाळी कामे		१०८.७२	३३४८५.७६	१२०१४०.०५	१५३६२५.८१

अ.क्र.	कामाची बाब	१ हेक्टर साठी			
		मनुष्य दिवस	मजुरी	साहित्य	एकूण रक्कम
ब.	**प्रथम वर्ष कामे**				
१	रोपवाटीकेचा अंशत: खर्च १२.५० X २५ से.मी. पॉलिथीन पिशवीमध्ये ६८८ रोपांची एप्रिल ते जून या कालावधीत देखभाल रू. ३.५० प्रती रोप (मजुरी रू. २.६९ व साहित्य पुरवठा रू.०.८१ प्रती रोप)	६.००	१८४८.००	५५७.२८	२४०५.२८
२	खणलेल्या खड्यातून निघालेल्या मातीतुन दगड गोटे, कचरा वेचुन अलग करुन खड्डा चांगल्या मातीने भरणे व खड्डे भरताना त्यात खत मिसळणे. (१.६६ म.दिन प्रती १०० खड्डे) खत रु. १.७५ प्रती रोपे	१०.३८	३१९७.०४	१०९३.७५	४२९०.७९
३	रोपवाटीकेमधून रोपवनक्षेत्रापर्यंत रोपांची वाहतूक ६८८ रोपे, (भराई व उतराई खर्चासह) मजुरी ०.१४ म.दिन प्रति १०० रोपे व साहित्य रू. १.८२ प्रती रोप.	०.९६	२९५.६८	१२५२.१६	१५४७.८४
४	रोपवनात ६२५ रोपांची लागवड करणे १.५ म.दि. प्रति १०० रोपे	९.३८	२८८९.०४	०.००	२८८९.०४
५	१०% मरअळीच्या ठिकाणी नवीन रोपे लागवड करणे. (फळ देणा-या प्रजाती लावणे) १०० रोपांसाठी २ म.दि. प्रमाणे	१.२६	३८८.०८	०.००	३८८.०८
६	रोपवनात ३ वेळा निंदणी करणे (रोपासभोवती १ मी. व्यासातील वर्तुळाकार) व २ वेळा भरभांगलण करणे / रोपांची माती भुसभुशीत करुन भर देणे (१ निंदणी १०० रोपांकरीता १ म.दि. व १ मातीचा भर देणे १०० रोपांकरीता ०.५० म.दि. प्रमाणे) निंदणीचे वेळी खत देणे. खत किंमत रू. ०.८२ प्रति रोप प्रमाणे	२५.००	७७००.००	५१२.५०	८२१२.५०
७	आवश्यकतेनुसार ६२५ रोपांना माहे नोव्हेबर, डिसेंबर मध्ये १ वेळा जानेवारी ते मार्च महिण्यात २ वेळा प्रती रोप ५ लिटर या प्रमाणे पाणी देणे, पाच लिटरचे ६२५ प्लास्टिक कॅन / मातीचे मडके @ २५ रु. प्रमाणे, १०० लिटरचे ७ ड्रम @ ४०० रुपये व पाणी ५० पैसे प्रती लिटर प्रमाणे आणि पाणी देणे @ १५० रोपे प्रती मनुष्य दिन याप्रमाणे	३३.३३	१०२६५.६४	३०९२५.००	४११९०.६४
८	द्वितीय वर्षात मरळीचे जागी पुनर्लागवडीसाठी रोपवाटिका अंशत: खर्च ६२५ रोपांचे - १० टक्के रोपे तयार करणे ६३ रोपे तयार करणे रू. १२.५५प्रति रोप (मजुरी रू. ८.९३ + साहित्य रू. ३.६२ प्रति रोप) ऑक्टोबर ते मार्च	१.८३	५६३.६४	२२८.०६	७९१.७०
९	रोपवन संरक्षण - ९ महिने - जुलै ते मार्च. १० हेक्टर साठी १ मजूर. (रोपवन संरक्षण, खोदलेले चर व उंचवटयाची आवश्यकतेनुसार देखभाल व दुरुस्ती, नैसर्गिक रोपांचे संवर्धन करणे,	२७.३८	८४३३.०४	०.००	८४३३.०४
१०	निवडलेल्या नैसर्गिक पुनर्निर्मिती रोपांची निंदणी, भरभांगलन करणे, फुटव्याचे एकेरीकरण करणे (प्रती १०० रोपे १.१५ म. दि.)	२.३०	७०८.४०	१०.००	७१८.४०
११	ऑक्टोबर महिण्यात जिवंत रोपांची टक्केवारी काढण्यासाठी ग्रीड निहाय व प्रजाती प्रमाणे रोपांची मोजणी करणे व रोपवन पुस्तीकेत नोंद घेणे	०.५०	१५४.००	५.००	१५९.००
१२	अग्निप्रतिबंधक कामे (जाळ रेषा) इ. कामे करणे)	२.००	६१६.००	०.००	६१६.००
	एकूण	**१२०.३२**	**३७०५८.५६**	**३४५८३.७५**	**७१६४२.३१**
	आकस्मिक खर्च ३.० टक्के			२१४९.२७	२१४९.२७
	मजुर कल्याण ४.० टक्के			२८६५.६९	२८६५.६९
	एकूण प्रथम वर्ष कामे	**१२०.३२**	**३७०५८.५६**	**३९५९८.७१**	**७६६५७.२७**

अ.क्र.	कामाची बाब	१ हेक्टर साठी			
		मनुष्य दिवस	मजुरी	साहित्य	एकूण रक्कम
क.	द्वितीय वर्ष कामे				
१	रोपवाटीकेचा अंशत: खर्च १२.५० X २५ से.मी. पॉलिथीन पिशवीतील ६३ रोपांची द्वितीय वर्षात मरळीच्याजागी पुर्नलागवडसाठी एप्रिल ते जून कालावधीसाठी देखभाल, रू. ३.५० प्रती रोप (मजुरी रू.२.६९ + साहित्य रू.०.८१ प्रती रोप)	०.५५	१६९.४०	५१.०३	२२०.४३
२	रोपवाटिकेमधून ६३ रोपे वाहतूक करणे. (भराई व उतराई खर्चासह) मजुरी ०.१४ म.दि. + साहित्य रू. १.८२ प्रती रोप.	०.०९	२७.७२	११४.६६	१४२.३८
३	६३ रोपांची मरअळी लागवड. १०० रोपांना २ म.दि. प्रमाणे	१.२६	३८८.०८	०.००	३८८.०८
४	रोपवनात २ वेळा निंदणी करणे (रोपासभोवती १ मी. व्यासातील वर्तुळाकार)व १ वेळा भरभांगलण करणे / रोपांची माती भुसभुशीत करुन भर देणे (१ निंदणी १०० रोपांकरीता १ म.दि. व १ मातीचा भर देणे १०० रोपांकरीता ०.५० म.दि. प्रमाणे) निंदणीचे वेळी खत देणे. खत किंमत रू. ०.८२ प्रति रोप प्रमाणे	१५.६२	४८१०.९६	५१२.५०	५३२३.४६
५	आवश्यकतेनुसार ६२५ रोपांना माहे नोव्हेंबर, डिसेंबर, जानेवारी व जुन मध्ये १ वेळा . आणि फेब्रुवारी ते मे महिण्यात २ वेळा प्रती रोप ५ लिटर या प्रमाणे पाणी देणे, पाच लिटरचे ६३ प्लास्टिक कॅन / मातीचे मडके @ २५ रु. प्रमाणे (१० टक्के तूटफुट बदलणे), व पाणी ५० पैसे प्रती लिटर प्रमाणे आणि पाणी देणे @ १५० रोपे प्रती मनुष्य दिन याप्रमाणे	५०.००	१५४००.००	२०३२५.००	३५७२५.००
६	रोपवन संरक्षण - १२ महिने - १० हेक्टर साठी १ मजूर. (रोपवन संरक्षण, खोदलेले चर व उंचवटयाची आवश्यकतेनुसार देखभाल व दुरुस्ती, नैसर्गिक रोपाचे संवर्धन करणे,	३६.५०	११२४२.००	०.००	११२४२.००
७	मे व ऑक्टोबर महिण्यात जिवंत रोपांची टक्केवारी काढण्यासाठी ग्रीड निहाय व प्रजातीनिहाय प्रमाणे रोपांची मोजणी करणे व रोपवन पुस्तीकेत नोंद घेणे	१.००	३०८.००	०.००	३०८.००
८	अग्निप्रतिबंधक कामे (जाळ रेषा) इ. कामे करणे)	२.००	६१६.००	०.००	६१६.००
	एकूण	१०७.०२	३२९६२.१६	२१००३.१९	५३९६५.३५
	आकस्मिक खर्च ३.० टक्के			१६१८.९६	१६१८.९६
	मजुर कल्याण ४.० टक्के			२१५८.६१	२१५८.६१
	एकूण द्वितीय वर्ष कामे	१०७.०२	३२९६२.१६	२४७८०.७६	५७७४२.९२
ड.	तृतीय वर्ष कामे				
१	रोपवनात १ वेळा निंदणी करणे व रोपांची माती भुसभुशीत करुन भर देणे, (रोपासभोवती १ मी. व्यासातील वर्तुळाकार) (१ निंदणी १०० रोपांकरीता १ म.दि. प्रमाणे) रोपे निंदणीचे वेळी खत देणे. प्रति रोप रू. ०.८२/- प्रमाणे	९.३८	२८८९.०४	५१२.५०	३४०१.५४
२	आवश्यकतेनुसार ३१३ रोपांना माहे नोव्हेंबर, डिसेंबर, जानेवारी व जुन मध्ये १ वेळा आणि फेब्रुवारी ते मे महिण्यात २ वेळा प्रती रोप ५ लिटर या प्रमाणे पाणी देणे, पाणी ५० पैसे प्रती लिटर प्रमाणे आणि पाणी देणे @ १५० रोपे प्रती मनुष्य दिन याप्रमाणे	२५.०४	७७१२.३२	१०१७२.००	१७८८४.३२
३	रोपवन संरक्षण - १२ महिने - १० हेक्टर साठी १ मजूर. (रोपवन संरक्षण, खोदलेले चर व उंचवटयाची आवश्यकतेनुसार देखभाल व दुरुस्ती, नैसर्गिक रोपाचे संवर्धन करणे,	३६.५०	११२४२.००	०.००	११२४२.००
४	नैसर्गिक पुनर्निर्मिती रोपांची निंदणी, भरभांगलन करणे, फुटव्याचे एकेरीकरण करणे, रोपांची उंची व तळाचे वेडी मोजणे व नोंदी घेणे (प्रती १०० रोपे २.३५ म. दि.)	४.७०	१४४७.६०	०.००	१४४७.६०
५	मे व ऑक्टोबर महिण्यात जिवंत रोपांची टक्केवारी काढण्यासाठी ग्रीड व प्रजाती निहाय रोपांची मोजणी करणे, उंची व वेढी, रोपवन पुस्तीकेत नोंद घेणे	२.००	६१६.००	२५.००	६४१.००
६	अग्निप्रतिबंधक कामे (जाळ रेषा) इ. कामे करणे)	२.००	६१६.००		६१६.००
	एकूण	७९.६२	२४५२२.९६	१०७०९.५०	३५२३२.४६
	आकस्मिक खर्च ३.० टक्के	०.००	०.००	१०५६.९७	१०५६.९७
	मजुर कल्याण ४.० टक्के	०.००	०.००	१४०९.३०	१४०९.३०
	एकूण तृतीय वर्ष कामे	७९.६२	२४५२२.९६	१३१७५.७७	३७६९८.७३

अ.क्र.	कामाची बाब	१ हेक्टर साठी			
		मनुष्य दिवस	मजुरी	साहित्य	एकूण रक्कम
इ.	चतुर्थ वर्ष कामे				
१	रोपवन संरक्षण - १२ महिने - १० हेक्टर साठी १ मजूर. (रोपवन संरक्षण, खोदलेले चर व उंचवटयाची आवश्यकतेनुसार देखभाल व दुरुस्ती, नैसर्गिक रोपांचे संवर्धन करणे,	३६.५०	११२४२.००	०.००	११२४२.००
२	मे व ऑक्टोबर महिण्यात जिवंत रोपांची टक्केवारी काढण्यासाठी ग्रीड व प्रजाती निहाय रोपांची मोजणी करणे, उंची व वेढी, रोपवन पुस्तीकेत नोंद घेणे	२.००	६१६.००	२५.००	६४१.००
३	अग्निप्रतिबंधक कामे (जाळ रेषा) इ. कामे करणे)	२.००	६१६.००		६१६.००
	एकूण	४०.५०	१२४७४.००	२५.००	१२४९९.००
	आकस्मिक खर्च ३.० टक्के			३७४.९७	३७४.९७
	मजुर कल्याण ४.० टक्के			४९९.९६	४९९.९६
	एकूण चतुर्थ वर्ष कामे	४०.५०	१२४७४.००	८९९.९३	१३३७३.९३
फ.	पंचम वर्ष कामे				
१	रोपवन संरक्षण - १२ महिने - १० हेक्टर साठी १ मजूर. (रोपवन संरक्षण, खोदलेले चर व उंचवटयाची आवश्यकतेनुसार देखभाल व दुरुस्ती, नैसर्गिक रोपांचे संवर्धन करणे,	३६.५०	११२४२.००	०.००	११२४२.००
२	मे व ऑक्टोबर महिण्यात जिवंत रोपांची टक्केवारी काढण्यासाठी ग्रीड व प्रजाती निहाय रोपांची मोजणी करणे, उंची व वेढी, रोपवन पुस्तीकेत नोंद घेणे	२.००	६१६.००	२५.००	६४१.००
३	अग्निप्रतिबंधक कामे (जाळ रेषा) इ. कामे करणे)	२.००	६१६.००	०.००	६१६.००
	एकूण	४०.५०	१२४७४.००	२५.००	१२४९९.००
	आकस्मिक खर्च ३.० टक्के			३७४.९७	३७४.९७
	मजुर कल्याण ४.० टक्के			४९९.९६	४९९.९६
	एकूण पंचम वर्ष कामे	४०.५०	१२४७४.००	८९९.९३	१३३७३.९३
	एकूण एकंदर	४९६.६८	१५२९७७.४४	१९९४९५.१५	३५२४७२.५९

गोषवारा

अ.क्र	वर्ष	मनुष्य दिवस	मजुरी	साहित्य	एकूण	प्रति रोप खर्च
१	लागवड पूर्व कामे	१०८.७२	३३४८५.७६	१२०१४०.०५	१५३६२५.८१	१८६.२१
२	प्रथम वर्ष कामे	१२०.३२	३७०५८.५६	३९५९८.७१	७६६५७.२७	९२.९२
३	द्वितीय वर्ष कामे	१०७.०२	३२९६२.१६	२४७८०.७६	५७७४२.९२	६९.९९
४	तृतीय वर्ष कामे	७९.६२	२४५२२.९६	१३१७५.७७	३७६९८.७३	४५.७०
५	चतुर्थ वर्ष कामे	४०.५०	१२४७४.००	८९९.९३	१३३७३.९३	१६.२१
६	पंचम वर्ष कामे	४०.५०	१२४७४.००	८९९.९३	१३३७३.९३	१६.२१
	एकूण	४९६.६८	१५२९७७.४४	१९९४९५.१५	३५२४७२.५९	४२७.२४
				प्रति रोप खर्च रुपये	=	४२७.२४

वे.व.अ.
(रो.ह.यो.)

मु.व.स.
(अ.नि.व वि.)

मू.व.सं. (प्रा.)
नागपूर

मू.व.सं.
(मूल्यांकन)

अ.प्र.मु.व.सं.
(अ.नि.व वि.)

प्र.मु.व.सं.
(वन बल प्रमुख)

प्रधान मुख्य वनसंरक्षक (वनबल प्रमुख) महाराष्ट्र राज्य, नागपूर यांचे पत्र
क्रमांक कक्ष-१/रोहयो/प्र.क्र.१०/२२८२/२०१७-१८ नागपूर, दिनांक ७/३/२०१८ अन्वये मंजुर

नमुना क्रमांक -५ अ

३ मी. X ३ मी. अंतरावर ०.४५ X ०.४५ X ०.४५ मी. आकारमानाचे १११९ खड्ड
(१२०० Rmt- जल शोषक चरा सह) रोप संख्या १११९ प्रति हेक्टर

दैनंदिन मजुरी दर रूपये ३०८/-

अ. क्र	कामाची बाब	१ हेक्टर साठी			
		मनुष्य दिवस	मजुरी	साहित्य	एकुन रक्कम
अ	पुर्व पावसाळी कामे				
१	अ) मोजणी व सिमांकन करणे. (चार लहान दगडांची रास उभारण्यासह)	१.००	३०८.००	९१.००	३९९.००
	ब) उपचार नकाशा तयार करणे (१०० X ५० मिटरवर) ग्रिड टाकणे.	१.००	३०८.००	९१.००	३९९.००
	क) जागेवरील अनावश्यक झाडेझुडपे काढून जमिन तयार करणे.	१०.००	३०८०.००	९१.००	३१७१.००
२	ग्रीडच्या कोपऱ्यात ०.३० X ०.३० X ०.६० मी. आकाराचे चाचणी खड्डे खोदणे.	०.४	१२३.२०	०	१२३.२०
३	६० सेंमी X ५ से.मी. X १२ से.मी. आकाराचे सिमेंट पिल्लर ग्रीडच्या कोपऱ्यात ३० सेंमी खोलीत लावणे, सिमेंट पिल्लरला पेंट देणे व ग्रिड क्रमांक लिहीणे. (३ पिल्लर, रु. ७५ प्रति पिल्लर)	०	०.००	२२५	२२५.००
४	मृदसंधारणाची कामे-दगडधोंडे पसरलेल्या क्षेत्रातून दगड गोळा करणे व ३० मी. अंतरापर्यंत वाहतूक करून दिलेल्या आदेशाप्रमाणे बांधबंदिस्ती करणे.	३१.००	९५४८.००	०.००	९५४८.००
५	रोपवन क्षेत्रातील सर्व मौल्यवान नैसर्गिक रोपांना उपचार देण्यासाठी त्यांची ग्रीड निहाय व प्रजातीवार मोजणी करणे व रोपांना रंग पट्टा लाऊन त्याची रजिस्टर मध्ये नोंद घेणे. (०.७५ म. दि. प्रति १०० रोपे)	०.७५	२३१.००	२५.००	२५६.००
६	निरीक्षण पथ तयार करणे. (०.५ मनुष्य दिवस प्रति १०० मी.)	०.५०	१५४.००	०.००	१५४.००
७	समपातळी चराची आखणी करणे. दोन चरातील अंतर ८ मीटर १२०० र.मी. प्रती हे. साधनसामुग्री रू. ७३.१४/- प्रती १००० र.मी. प्रमाणे, ०.२५ म.दि. प्रती. प्रती १०० र.मी. साठी सा.पु.रू.१४.६२/- प्रती १०० र.मी.	३.००	९२४.००	१७६.००	११००.००
८	समपातळी चर खोदणे ०.६० मी. रूंद व ०.४५ मी. खोल आकाराच्या चरातून निघालेली माती उताराचे बाजूला लावणे प्रती हे १२०० र.मी. चर खोदणे. (०.१५ म.दि.प्रती र.मी.)	१८३.६०	५६५४८.८०	०.००	५६५४८.८०
९	गुरे प्रतीबंधक चर खोदणे - चराचा पाया व रूंदी ०.६० मीटर, खोली १ मीटर, माथा १.९० मी. व प्रती हेक्टरी चराची लांबी १०२ मीटर (प्रती मीटर १५५.४२ रू.) प्रत्यक्ष लागवड क्षेत्राची परिमीती घेऊन त्यानुसार चराची लांबी निश्चित करावी.	८२.५७	२५४३१.५६	९१.००	२५५२२.५६
	(स्थानिक परिस्थितीनुसार आवश्यकतेप्रमाणे यंत्राचा वापर करुन गुरेप्रतिबंधक चर खोदणे व खोदुन निघालेली माती व मुरुम निदेशांप्रमाणे लावणे.)	महाराष्ट्र शासन जल संपदाविभाग सामाईक दर सुची २०१३-१४ बाब क्रमांक १, २ व ३ प्रमाणे मंजुर दर			
१०	खोदलेल्या गुरे प्रतीबंधक चरावर घायपात रोपे ३ ओळीत लावणे, एका हेक्टरवर ३०६ रोपे, ५.४८ रूपये प्रती रोपे याप्रमाणे.	१.००	३०८.००	१६७९.००	१९८७.००
११	खोदलेल्या १२०० र.मी. प्रती हेक्टर सलग समपातळी चरावर गवताचे ५ किलो बी पेरणे, गवत बी ९१.४२ रूपये प्रती किलो.	१२.००	३६९६.००	४५७.००	४१५३.००

अ. क्र	कामाची बाब	१ हेक्टर साठी			
		मनुष्य दिवस	मजुरी	साहित्य	एकुन रक्कम
१२	१२०० मी. सीसीटी वरील अनावश्यक गवत काढणे. १०० र.मी.ला १.२० म. दि. प्रमाणे	१४.४०	४४३५.२०	०.००	४४३५.२०
१३	खड्ड्यांची आखणी करणे : ३ मी. X ३ मी. अंतरावर ०.४५ मी. X ०.४५ मी. X ०.४५ मी. आकारमानाचे १११९ खड्डे आखणी करणे (प्रती ५० खड्डे ०.१३ म.दि.) सा.पु. रु. ४.०९ प्रती ५० खड्डे	२.८९	८९०.१२	९१.००	९८१.१२
१४	खड्डे खोदणे : ३ मी. X ३ मी. अंतरावर ०.४५ मी. X ०.४५ मी. X ०.४५ मी. आकारमानाचे खड्डे खोदणे ६.४३ म.दि. प्रती १०० खड्डे एकूण खड्डे १११९ (प्रति ६.६० म.दि. प्रति १०० खड्डे)	७३.३३	२२५८५.६४	०.००	२२५८५.६४
	(स्थानिक परिस्थितीनुसार आवश्यकतेप्रमाणे यंत्राचा वापर करुन खड्डे खोदणे व खोदुन निघालेली माती व मुरुम निदेशांप्रमाणे लावणे.)	महाराष्ट्र शासन जल संपदाविभाग सामाईक दर सुची २०१३-१४ बाब क्रमांक १, २ व ३ प्रमाणे मंजुर दर			
१५	रोपवाटिकेचा अंशत: खर्च १२.५ X २५ से.मी. पॉलिथीन पिशवीमध्ये १३३३ रोपे (२० टक्के मरळीसह) रोपांची एप्रिल ते जून या कालावधित देखभाल रू.८.७७ (प्रति रोप मजुरी रू.५.५६ व सा.पु. रू.३.२१ प्रति रोप)	३८.६३	११८९८.०४	४२८८.६३	१६१८६.६७
१६	रोपवनाचा माहिती फलक उभारणे. (४ X ३ फुट) १ नग	०.००	०.००	५०००.००	५०००.००
	एकूण	**४५६.०७**	**१४०४६९.५६**	**१२३०५.६३**	**१५२७७५.१९**
	आकस्मित खर्च ३.० टक्के	०.००	०.००	४५८३.२६	४५८३.२६
	मजुर कल्याण ४.० टक्के	०.००	०.००	६१११.०१	६१११.०१
	एकूण	**४५६.०७**	**१४०४६९.५६**	**२२९९९.८९**	**१६३४६९.४५**
ब.	प्रथम वर्ष कामे				
१	रोपवाटीकेत रोपे तयार करणे अंशत: खर्च (एप्रिल ते सप्टेंबर) २० टक्के रोपे मरअळीसह १२.५० X २५ से.मी. आकाराच्या पिशवीमध्ये रोपे तयार करणे यासाठी मजुरी रू.६.७३ व साहित्य पुरवठा रू.३.२१ प्रती रोप प्रमाणे एकूण रू. प्रति रोप प्रमाणे १३३३ रोपे तयार करणे.	११.६८	३५९७.४४	१०७२.१५	४६६९.५९
२	खड्डा चांगल्या मातीने भरणे १.६६ म.दिन प्रती १०० खड्डे भरताना त्यात सिंगल सुपर फॉस्फेट खत मिसळणे.	१८.४४	५६७९.५२	१९५०.००	७६२९.५२
३	रोपवाटीकेतमधून रोपवनक्षेत्रापर्यंत रोपांची वाहतूक १३३३ रोपे (भराई उतराई खर्चासह) मजुरी ०.१४ म.दि.प्रति १०० रोपे व सा.पु. रू. १.८२ प्रति रोप	१.५५	४७७.४०	२४३६.७२	२९१४.१२
४	गुरे प्रतिबंधक चर उंचवटा किंवा जैविक कुंपनावर लागवड केलेल्या घायपात, काटेरी प्रजातीं प्रोसोपिस /बोर इ. रोपांची २०% मरअळी भरणे. (६२ रोपे प्रति रोपे रु. ३)	०.२५	७७.००	१८६	२६३.००
५	रोपवनात रोपांची लागवड करणे १ म.दिन प्रति १०० रोपे	११.११	३४२१.८८	०.००	३४२१.८८
६	रोपवनात ३ वेळा निंदणी करणे व २ वेळा भरभांगलण करणे, निंदणीचे वेळी खत देणे. खत किंमत रू. ०.८२ प्रति रोप प्रमाणे	३८.८८	११९७५.०४	९१४.००	१२८८९.०४
७	नैसर्गिक पुर्नत्पादन रोपांची निंदणी, भर भांगलन करणे, फुटव्यांचे एकेरीकरण करणे. (प्रति १०० रोपे)	१.१५	३५४.२०	०	३५४.२०
८	२० टक्के मरअळीच्या ठिकाणी नवीन रोपे लागवड करणे. २ म.दि. १०० रोपे प्रमाणे २२२ रोपे.	४.४४	१३६७.५२	०.००	१३६७.५२

अ.क्र.	कामाची बाब	१ हेक्टर साठी			
		मनुष्य दिवस	मजुरी	साहित्य	एकुन रक्कम
५	रोपवाटिकेचा अंशत: खर्च द्वितीय वर्षात मरळीच्याजागी पुर्नलागवडसाठी, १३३३ रोपांचे २० टक्के रोपे तयार करणे. ५०० रोपे. प्रति रोप रू. प्रमाणे, (मजुरी रू.५.५६ + सा.पु. रू.३.२१ प्रति रोप प्रमाणे)	७.७८	२३९६.२४	७१४.२३	३११०.४७
१०	रोपवन संरक्षण - ९ महिने - जुलै ते मार्च. १० हेक्टर साठी १ मजूर.	३०.००	९२४०.००	०.००	९२४०.००
११	अग्निप्रतिबंधक कामे (जाळ रेषा)	२.००	६१६.००	०.००	६१६.००
	एकूण	१२७.२८	३९२०२.२४	७२७३.१०	४६४७५.३४
	आकस्मित खर्च ३.० टक्के	०.००	०.००	१३९४.२६	१३९४.२६
	मजुर कल्याण ४.० टक्के	०.००	०.००	१८५९.०१	३३५०.४५
	एकूण	१२७.२८	३९२०२.२४	१०५२६.३७	५१२२०.०५
ब.	द्वितीय वर्ष कामे				
१	रोपवाटिकेचा अंशत: खर्च द्वितीय वर्षात मरळीच्याजागी पुर्नलागवडसाठी, १११९ रोपांचे २० टक्के रोपे तयार करणे. २२२ रोपे. मजुरी रू.१.६९ व सा.पु. रू. ०.८० प्रति रोप प्रमाणे एकूण प्रति रोप रू. २.४९ प्रमाणे,	१.९५	६००.६०	१७८.५६	७७९.१६
२	मरळी साठी रोपवाटिकेमधून २२२ रोपे वाहतूक करणे. (भराई उतराई खर्चासह) मजूरी ०.१४ म.दि व सा. पु.रू. १.८२ प्रति रोप १०० रोपांसाठी	०.३१	९५.४८	४०५.८१	५०१.२९
३	मेलेल्या रोपांचे ठिकाणी २० टक्के रोपांची पुर्नलागवड करणे. २२२ रोपे, १०० रोपांना २.०० म.दि.	४.४४	१३६७.५२	०.००	१३६७.५२
४	रोपवनात २ वेळा निंदणी करणे व १ वेळा भरभांगलण करणे. रोपांची माती भुसभुशित करून थर देणे, रोपे निंदणीचे वेळी खत देणे. खत किंमत रु.०.८२ प्रती रोप या प्रमाणे	२७.७७	८५५३.१६	९१४.००	९४६७.१६
५	गुरे प्रतिबंधक चर उंचवटा किंवा जैविक कुंपनावर लागवड केलेल्या घायपात, काटेरी प्रजातीं प्रोसोपिस / बोर इ. रोपांची २०% मरअळी भरणे. (६२ रोपे प्रति रोपे रु. ३)	०.२५	७७.००	१८६	२६३.००
६	रोपवनाचा संरक्षण - १२ महिने - १० हेक्टरसाठी १ मजुर	३६.५०	११२४२.००	०.००	११२४२.००
७	अग्निप्रतिबंधक कामे (जाळ रेषा)	२.००	६१६.००	०.००	६१६.००
	एकूण	७३.२२	२२५५१.७६	१६८४.३७	२४२३६.१३
	आकस्मित खर्च ३.० टक्के	०.००	०.००	७२७.०८	७२७.०८
	मजुर कल्याण ४.० टक्के	०.००	०.००	९६९.४५	९६९.४५
	एकूण	७३.२२	२२५५१.७६	३३८०.९०	२५९३२.६६
क.	तृतीय वर्ष कामे				
१	नैसर्गिक पुर्नत्पादन रोपांची निंदणी, भर भांगलन करणे, फुटव्यांचे एकेरीकरण करणे. रोपांची उंची व तळाची वेढी मोजणे व नोंदी घेणे. (प्रति १०० रोपे)	२.३५	७२३.८०	०	७२३.८०
२	रोपवनात १ वेळा निंदणी करणे व १ वेळा भरभांगलण करणे.	१६.६७	५१३४.३६	०.००	५१३४.३६
३	रोपवनाचा संरक्षण - १२ महिने - १० हेक्टरसाठी १ मजुर	३६.५०	११२४२.००	०.००	११२४२.००

अ. क्र	कामाची बाब	१ हेक्टर साठी			
		मनुष्य दिवस	मजुरी	साहित्य	एकुण [illegible]
४	अग्निप्रतिबंधक कामे (जाळ रेषा)	२.००	६१६.००	०.००	६१६.००
	एकूण	५७.५२	१७७१६.१६	०.००	१७७१६.१६
	आकस्मित खर्च ३.० टक्के	०.००	०.००	५३१.४८	५३१.४८
	मजुर कल्याण ४.० टक्के	०.००	०.००	७०८.६५	७०८.६५
	एकूण	५७.५२	१७७१६.१६	१२४०.१३	१८९५६.२५
इ.	चतुर्थ वर्ष कामे				
१	मे व ऑक्टोबर महिण्यात जिवंत रोपांची टक्केवारी काढण्यासाठी ग्रिड निहाय व प्रजाती प्रमाणे रोपांची मोजणी करणे व उंची व वेढी घेणे.	०.५	१५४.००	०	१५४.००
२	रोपवनाचा संरक्षण -१२ महिने -१० हेक्टरसाठी १ मजुर	३६.५०	११२४२.००	०.००	११२४२.००
३	अग्निप्रतिबंधक कामे (जाळ रेषा)	२.००	६१६.००	०.००	६१६.००
	एकूण	३९.००	१२०१२.००	०.००	१२०१२.००
	आकस्मित खर्च ३.० टक्के	०.००	०.००	३६०.३६	३६०.३६
	मजुर कल्याण ४.० टक्के	०.००	०.००	४८०.४८	४८०.४८
	एकूण	३९.००	१२०१२.००	८४०.८४	१२८५२.८४
फ.	पंचम वर्ष कामे				
१	मे व ऑक्टोबर महिण्यात जिवंत रोपांची टक्केवारी काढण्यासाठी ग्रिड निहाय व प्रजाती प्रमाणे रोपांची मोजणी करणे व उंची व वेढी घेणे.	०.५	१५४.००	०	१५४.००
२	रोपवनाचा संरक्षण - १२ महिने - १० हेक्टरसाठी १ मजुर	३६.५०	११२४२.००	०.००	११२४२.००
३	अग्निप्रतिबंधक कामे (जाळ रेषा)	२.००	६१६.००	०.००	६१६.००
	एकूण	३९.००	१२०१२.००	०.००	१२०१२.००
	आकस्मित खर्च ३.० टक्के	०.००	०.००	३६०.३६	३६०.३६
	मजुर कल्याण ४.० टक्के	०.००	०.००	४८०.४८	४८०.४८
	एकूण	३९.००	१२०१२.००	८४०.८४	१२८५२.८४

१	लागवड पूर्व कामे	४५६.०७	१४०४७०	१२३०६	१५२७७५	१०६९४	१६३४६५
२	प्रथम वर्ष कामे	१२७.२८	३९२०२	७२७३	४६४७५	३२५३	४९७२५
३	द्वितीय वर्ष कामे	७३.२२	२२५५२	१६८४	२४२३६	१६९७	२५९३३
४	तृतीय वर्ष कामे	५७.५२	१७७१६	०	१७७१६	१२४०	१८९५६
५	चतुर्थ वर्ष कामे	३९.००	१२०१२	०	१२०१२	८४१	१२८५३
६	पंचम वर्ष कामे	३९.००	१२०१२	०	१२०१२	८४१	१२८५३
	एकूण	७९२.०९	२४३९६४	२१२६३	२६५२२७	१८५६६	२८३७५३

टिप :- सदर अंदाजपत्रक वापरताना सद्याच्या मजुरीच्या प्रचलित दराने वापरण्यात यावे.

प्रती रोप खर्च रुपये २५३.१५

प्रधान मुख्य वनसंरक्षक (वन बल प्रमुख) महाराष्ट्र राज्य, नागपूर यांचे कार्यालय
"वनभवन" रामगिरी रोड, सिव्हील लाईन्स, नागपूर
E-mail: apccfbpd@gmail.com; Phone: 0712-2556785; Fax: 0712-2550675

==========

क्रमांक कक्ष-१/रोहयो/प्र.क्र.३५/८५८/ १९-२०
नागपूर ४४० ००१, दिनांक **२१/०८/२०१९**

प्रति,

१) प्रधान मुख्य वनसंरक्षक,(उत्पादन व व्यवस्थापन) नागपूर
२) अपर प्रधान मुख्य वनसंरक्षक,(संशोधन, शिक्षण व प्रशिक्षण),पुणे
३) अपर प्रधान मुख्य वनसंरक्षक, (वन्यजीव-पूर्व) नागपूर
४) अपर प्रधान मुख्य वनसंरक्षक, (वन्यजीव-पश्चिम) मुंबई
५) अपर प्रधान मुख्य वनसंरक्षक(कार्य आयोजना-पश्चिम) पुणे
६) मुख्य वनसंरक्षक (प्रादेशिक), सर्व/ वनसंरक्षक (प्रा.) यवतमाळ
७) मुख्य वनसंरक्षक (कार्य आयोजना-पूर्व) नागपूर

विषय:- गवत रोपवाटीका व कुरण विकास कामाचे नमुना अंदाजपत्रका बाबत.

संदर्भ- या कार्यालयाचे पत्र क्र.कक्ष-१/रोहयो/प्र.क्र.३५(१७-१८)/७८३/ २०१९-२० , दि.०६/०८/२०१९

विषयांकीत प्रकरणी मागील वर्षात कुंडल येथिल कार्यशाळेत कुरण विकासावर तयार केलेले व श्री माधव गोगटे, प्रधान मुख्य वनसंरक्षक (सेवानिवृत्त) यांचेकडुन प्राप्त झालेले गवत रोपवाटीका व कुरण विकास कामाचे नमुना अंदाजपत्रकास मान्यता प्रदान करणेबाबत विनंती करण्यात आलेली होती.

त्याअनुषंगाने प्रधान मुख्य वनसंरक्षक, (वनबलप्रमुख) म.रा. नागपूर यांचे दालनात दि. ०३/८/२०१९ रोजी झालेल्या चर्चेनुसार उपरोक्त संदर्भिय पत्रान्वये दि.०७/०८/२०१९ रोजी समितीची बैठक आयोजीत करण्यात आलेली होती. सदर बैठकीमध्ये समितीचे सर्व सदस्यांचे झालेल्या चर्चेनुसार व संमितीसह सुधारीत अंदाजपत्रक तयार करण्यात आलेले असून सदर अंदाजपत्रकास सक्षम अधिका-यांनी मान्यता प्रदान करण्यात आलेली आहे.

करीता सदर मान्यताप्राप्त अंदाजपत्रक माहिती व पुढील आवश्यक कार्यवाहीकरीता यासोबत पाठविण्यात येत आहे.

सहपत्र:-वरीलप्रमाणे

(जी.साईप्रकाश)
प्रधान मुख्य वनसंरक्षक
(अर्थसंकल्प, नियोजन व विकास)
महाराष्ट्र राज्य

प्रतिलिपी:- स्वीय सहाय्यक, प्रधान मुख्य वनसंरक्षक, (वनबलप्रमुख) म.रा.नागपूर यांना माहितीकरीता.
प्रतिलिपी:- मुख्य वनसंरक्षक (मुल्यांकन), नागपूर यांना माहितीकरीता अग्रेषित.
प्रतिलिपी:- विभागीय वन अधिकारी, कक्ष-१(पी) यांना माहिती व आवश्यक कार्यवाहीकरीता अग्रेषित.

गवत रोपवाटीका कामाचे नमुना अंदाजपत्रक

(कालावधी ६ महिने १५ जानेवारी ते १५ जून)

१००० रोपांचा एक घटक प्रमाणे

दैनंदिनी मजुरीचा दर रुपये ३३९.६२

आधार:-महाराष्ट्र शासन नियोजन विभाग- शासन निर्णय क्र.मग्रारो-2016/प्र.क्र.103/मग्रारो-1, मंत्रालय, मुंबई , दि. 29 सप्टेंबर, 2016

अ.क्र.	कामाचा तपशील	प्रति १००० रोपांसाठी			
		मनुष्य दिवस	मजुरी	साहीत्य व पुरवठा	एकूण रक्कम
१	२	३	४	५	६
१	रोपवाटीकेसाठी भाडयाने जागा घेणे	०.००	०.००	५४९.००	५४९.०००
२	पॉलिथिन पिशवीची किंमत १२.५ x १५ से.मी. काळी फोल्डींगची २०० गेज घडीची पॉलिथिन पिशवी दर रू.१३९/- प्रति किलो दराने रोपवाटीके पर्यंत वाहतूक खर्चासह (प्रति किलो ३५० पिशव्या) १००० पिशव्यांसाठी ३.०० किलो प्रमाणे	०.००	०.००	४१७.००	४१७.०००
३	रोपवाटीकेच्या जागेची सफाई करून जागेची मोजणी करणे. निरीक्षण पथ व ओटे आकार (१२x१.२x०.१५) मी. व काटेरी कुंपन तयार करणे. (साहित्याच्या किंमती सह)	३.६०	१२२२.६३	१८३.००	१४०५.६३२
४	गाळाची माती, शेणखत, वाळू (२:१:१) पुरवठा व रोपवाटीके पर्यंत वाहतूक करणे, माती ०.२४ घ.मी., शेणखत ०.१२ वाळू ०.११ घ.मी. मिळून ०.४७ घ.मी. प्रति १००० पिशव्या प्रमाणे) वाळु व शेणखत रू. १२८०/- प्रती घ.मी. व माती रू. ५४८/- प्रति घ.मी. प्रमाणे	०.००	०.००	४३६.८६	४३६.८६०
५	गाळाचो माती, शेणखत, वाळू यांची छाननी करून २:१:१ प्रमाणात मिश्रण करून, पिशव्यामध्ये भरुन बेडमध्ये लावणे	३.००	१०१८.८६	०.००	१०१८.८६०
६	गवताचे बी गोळा करणे /उपलब्ध करणे ३०० ग्रॅम प्रती १००० रोपे सर्व खर्चासह IGFRI कडून खरेदी /अथवा स्वत: बी गोळा कररणे, योग्य पध्दतीने साठवणुक करणे (हंगाम- नोव्हेंबर)	०.००	०.००	५००.००	५००.०००
७	पॉलिथिन पिशवीमध्ये बी पेरणे/ ठोंब लावणे	०.५०	१६९.८१	०.००	१६९.८१०
८	पिशवीतील रोपांना झारीने पाणी देणे फेब्रुवारी ते जून (१.७५ म.दि.) झारी व पाईप खर्चासह	८.७५	२९७१.६८	७३१.००	३७०२.६७५
९	पॉलिथीन पिशव्या १ वेळा हलविणे	२.००	६७९.२४	०.००	६७९.२४०
१०	पॉलिथिन पिशव्यातील रोपांची २ वेळा निंदणी करणे.	०.०२	६.७९२	०.००	६.७९२
११	रोपांचे संगोपण व देखभाल	८.१०	२७५०.९२	०.००	२७५०.९२२
	एकूण	२५.९७	८८१९.९३	२८१६.८६	११६३६.७९
	आकस्मिक खर्च ३%		०.००	८०९.१७	३४९.१०४
	मजुर कल्याण ४%		०.००	८९९.०८	४६५.४७२
	एकूण एकंदर	२५.९७	८८१९.९३	४५२५.१०	१२४५१.३६७
	प्रति रोप खर्च रू.				१२.४५१
	मजूरी व साहीत्य पुरवठा यांची टक्केवारी		७०.८४%	३६.३४%	१००%

वि.व.अ
(रोहयो)

मुवसं (प्रा)
(नागपूर)

मुवसं
(मुल्यांकन)

मुवसं
(अ.नि.व.वि)

प्रमुवसं
(अ.नि.व.वि)

गवत लागवड-कुरण विकास

वन व वनेत्तर पडीत जमीनीवर वैरणी करीता गवत रोपांची लागवड

दैनंदिनी मजुरीचा दर रुपये ३३९.६२

आधार:- डब्ल्यू.ए.१-म.वा.प्र.		\ आकाराची खाच-५००० र.मि.				
अ.क्र.	कामाचा तपशील	प्रति १००० रोपांसाठी				
		मनुष्य दिवस	मजुरी	साहीत्य व पुरवठा	एकूण रक्कम	शेरा
	पूर्व पावसाळी कामे					
१	२	३	४	५	६	७
१	सर्वेक्षण व सिमांकन करणे	०.५०	१६९.८१	०.००	१६९.८१	
२	उपचार नकाशा तयार करणे	०.४०	१३५.८५	०.००	१३५.८५	
३	मर्यादेत आगीने अनावश्यक गवत व काटेरी झुडपे याचा नाश करणे (FW-१ बाब क्र.५)	२.००	६७९.२४	०.००	६७९.२४	
४	क्षेत्राच्या हददीवर बांध तयार करणे (१६० र.मि.) दगड,गोटयांचे बांध तयार करुन त्यात बी पेरणी/ गुरे प्रतिबंधक काटेरी वनस्पतीची लागवड करणे. $\frac{(१.२० + ०.४०) \times ०.५० \text{ मी.} \times ०.५० \text{ मी.}}{२}$	४८.००	१६३०१.७६	०.००	१६३०१.७६	
५	मृद जलसंधारण कामे दगडधोंडे ३० मी.परिसरातून गोळा करुन आदेशाप्रमाणे बांध बंदीस्ती करणे ४ घ.मि.प्र.हेक्टर (क्षेत्राच्या आवश्यकतेनुसार ACF च्या तपासणी अन्वये)	३.५०	११८८.६७	०.००	११८८.६७	
६	०.३० मी. रुंदी आणि ०.२० मी. खोली V आकाराच्या खाचेची २ मी. अंतरावर आखणी करुन ५००० र.मी. खोदकाम करणे	८०.००	२७१६१.६०	५००.००	२७६६९.६०	
	एकूण	**१३४.४०**	**४५६४४.९३**	**५००.००**	**४६१४४.९३**	
	आकस्मिक खर्च ३%		**०.००**	**१३८४.३५**	**१३८४.३५**	
	मजुर कल्याण ४%		**०.००**	**१८४५.८०**	**१८४५.८०**	
	एकूण एकंदर	**१३४.४०**	**४५६४४.९३**	**३७३०.१४**	**४९३७५.०७**	

बाब क्र. 6- "व्हि"शेप फरो यंत्राच्या सहाय्याने केल्यास उपरोक्त दर्शविलेल्या मजुरीच्या 10% मजुरीच्या पैशात यंत्राने काम होईल, वेळ वाचेल.

अ.क्र.	कामाचा तपशील	प्रति १००० रोपांसाठी				
		मनुष्य दिवस	मजुरी	साहीत्य व पुरवठा	एकूण रक्कम	शेरा
	प्रथम वर्ष कामे					
१	६००० गवत रोपे वाहतूक लागवड क्षेत्र पर्यंत करणे (चढाई- उतराईसह)	८.४०	२८५२.८१	२०००.००	४८५२.८१	
२	५००० गवत रोपे लागवड करणे (V आकाराच्या खाचीवर १.०० मी. अंतराने)	५०.००	१६९८१.००	०.००	१६९८१.००	
३	खोदलेल्या हद्दी बांधावर घायपात/ स्थानीक काटेरी प्रजातीचे रोपे ३ ओळीत लावणे,एक हेक्टरवर ३०६ रोपे लावणे, ३ रु.प्र. कि.	१.००	३३९.६२	०.००	३३९.६२	
४	५००० गवत रोपांची निदणी २ वेळा, भर भांगलन १ वेळा करणे (१०० रोपास १ निदणी १ म. दी.) (१०० रोपास १ मातीचा भर ०.५० म. दि.)	१२५.००	४२४५२.५०	२२५०.००	४४७०२.५०	
५	रोपांना रासायनिक खताची एक मात्रा देणे SSP/ २०:२०:२० ग्रॅम प्रतिरोप देणे \P जुलै किंवा ऑगष्ट मध्ये जमिन ओली असतांना देणे	२.००	६७९.२४	७००.००	१३७९.२४	बाजार भावा प्रमाणे
६	अग्निप्रतिबंधक कामे / जाळरेषा	२.००	६७९.२४	०.००	६७९.२४	
७	रोपावन संरक्षण ९ महिने (जुलै ते मार्च) २५ हे. साठी १ मजुर क्षेत्रातील अनावश्यक गवत कुदळीने/ पावड्याने मुळासह खोदुन काढून नष्ट करणे १ म.दि. (WAI -बाब १६)	३०.००	१०१८८.६०	०.००	१०१८८.६०	
	एकुण	**२१८.४०**	**७४१७३.०१**	**४९५०.००**	**७९१२३.०१**	
	आकस्मिक खर्च ३%	०.००	०.००	२३७३.६९	२३७३.६९	
	मजूर कल्याण ४%	०.००	०.००	३१६४.९२	३१६४.९२	
	हत्यार भाडे + हत्यार धारणे रु. ४ प्रति दिन	०.००	०.००		०.००	
	एकूण एकंदर	२१८.४०	७४१७३.०१	१०४८८.६१	८४६६१.६२	

अ.क्र.	कामाचा तपशील	प्रति १००० रोपांसाठी				
		मनुष्य दिवस	मजुरी	साहीत्य व पुरवठा	एकूण रक्कम	शेरा
	द्वितीय वर्षकामे					
१	गवत रोपे १००० मरआळी भरण्यासाठी वाहतूक करणे रोपवाटीका ते लागवड क्षेत्र	१.१४	३८७.१७	१०००.००	१३८७.१७	
२	१००० रोपे लागवड करणे, मरआळीचे ठीकाणी	२०.००	६७९२.४०	०.००	६७९२.४०	
३	५००० गवत रोपांची निंदणी १ वेळा , भर भांगलन १ वेळा करणे (१०० रोपांना १.२५ म.दि.)	७५.००	२५४७१.५०	२२५०.००	२७७२१.५०	
४	अग्निप्रतिबंधक कामे / जाळरेषासाठी	२.००	६७९.२४	०.००	६७९.२४	
५	रोपावन संरक्षण १२ महिने २५ हे. १ मजूर	३६.५०	१२३९६.१३	०.००	१२३९६.१३	मग्रारोहयो नमुना ५ बाब क्र. ५ प्रमाणे
	एकुण	१४६.६४	४९८०१.८८	३९५०.००	५३७५१.८८	
	आकस्मिक खर्च ३%	०.००	०.००	१६१२.५६	१६१२.५६	
	मजूर कल्याण ४%	०.००	०.००	२१५०.०८	२१५०.०८	
	हत्यार भाडे + हत्यार पाजवणे रु. ४ प्रति दिन	०.००	०.००	०.००	०.००	
	एकूण एकंदर	१४६.६	४९८०१.८८	७७१२.६	५७५१४.५१	

अ.क्र	वर्ष	मनुष्य दिवस	मजूरी	साहित्य	एकुण	इतर खर्च	एकुण एकंदर
१	पुर्व पावसाळी कामे	१३४.४०	४५६४४.९३	३७३०.१४	४९३७५.०७	३२३०.१४	५२६०५.२२
२	प्रथम वर्ष कामे	२१८.४०	७४१७३.०१	४९५०.००	७९१२३.०१	५५३८.६१	८४६६१.६२
३	द्वितीय वर्ष कामे	१४६.६४	४९८०१.८८	३९५०.००	५३७५१.८८	३७६२.६३	५७५१४.५१
	एकुण एकंदर	४९९.४४	१६९६१९.८१	१२६३०.१४	१८२२४९.९६	१२५३१.३९	१९४७८१.३४
	प्रति रोप खर्च रू.						३८.९५६२६८९३

वि.व.अ.
(रोहयो)

मुवसं (ग्रा.)
(नागपूर)

मुवस
(मुल्याकन)

मुवसं
(अ.नं.व.वि)

प्रमुवस
(अ.नं.व.वि)

15/8

महाराष्ट्र शासन
वन विभाग

प्रधान मुख्य वनसंरक्षक (वनबलप्रमुख), महाराष्ट्र राज्य यांचे कार्यालय.

O/o Principal Chief Conservator of Forests (HoFF), Maharashtra State

Phone - 0712-2552557
E-mail – femsngp61@rediffmail.com
Website - www.mahaforest.gov.in

वनअभियंता, महाराष्ट्र राज्य
Forest Engineer, Maharashtra State
"Van Bhavan" 1st Floor, B Wing, Ramgiri Road, Civil Lines, Nagpur 440 001

कार्यालयीन टिप्पणी

क्रमांक:- पत्र क्र.कक्ष-२४/वअ/प्रशा-४/(२०२१-२२)/ १४९ दिनांक :- २३ /०७/२०२१

विषय: इमारत व इतर बांधकामांची अंदाजपत्रकीय रक्कम मिळणेबाबत.

संदर्भ : आपले कार्यालयाकडील कार्यालयीन टिपणी क्र. कक्ष-कॅम्पा/प्र.क्र .११/२०२०-२१ /१३२ **दि.०२/०७ /२०२१**

संदर्भिय **कार्यालयीन टिप्पणी** अन्वये मागविलेले माहिती यासमवेत जोडून सादर करण्यात येत आहे.

सहपत्र:- **वरीलप्रमाणे**

(प्र.भू .चौगुले)
वनअभियंता (अ.का.)
महाराष्ट्र राज्य, नागपूर

विभागीय वन **अधिकारी**
(महा कॅम्पा)

Sr. No.	Particular Of Work	Build Up Area in Sqmt	Avarage Estimated Cost
5(3(e)	Construction Work	Name	
1	Construction of Type-I Quarters (Forest Guard Quarters)	Single Unit	2157078.00
		Double Unit	4660950.00
2	Construction of Type-II Quarters (Forester Quarters)	Single Unit	2620436.00
		Double Unit	4853506.00
3	Construction of Type-III Quarters (RFO Quarters)	Single Unit	3553195.00
		Double Unit	7201530.00
4	Construction of Range Office		4470550.00
5	Amenities for Woman Front line staff (Ladies Toilet with Changing Room)		402500.00
6	Construction of Protection camps /Prolestion Huts		5491710.00
7	Consturction of Forest Custody		2317434.00
8	Consturction of Labour Shed(RCC/Febricated)		552552.00
9	Consturction of Watch Towers		966000.00
10	Consturction of Check Posts		846538.00

टिप:-

१) वरील नमुद कामाकरीता **सा.बां. विभाग नागपूर** यांचे परीपत्रक क्र.१३८ नुसार सन २०१९-२० याआर्थिक वर्षाकरीता नमुद असलेल्या दरामध्ये सन **२०२०-२१ या आर्थिक वर्षाकरीत** १०% जोडून येणार दर घेण्यात आलाअसुन या दरामध्ये १२.०० % जी.एस.टी., ४.००% आक**स्मीक खर्च ,1% मजुर** विमा विद्युतिकरणचा समावेश करण्यात आला आहे.

२) सा.बां.विभाग, महाराष्ट्र **राज्य, राज्य दरसुची सन** २०२०-२१ मध्ये पृष्ठ क्र.१ वरील Section (A) General Notes मधील बाबत क्र. (ii) मध्ये नमुद **प्रमाणे ज्या क्षेत्रात काम करावयाचे** आहे त्या प्रमाणे दिलेला तरतूदी नुसार कामाच्या रक्कमेत वाढ करण्यात यावी. (यादी **जोडण्यात येत आहे.)**

(प्र.भू .चौगुले)
वनअभियंता
महाराष्ट्र राज्य, नागपूर

सत्यमेव जयते

Govt. of Maharashtra

Public Works Department

State Schedule of Rate

2020-21

For State of Maharashtra
(w.e.f. 01/10/2020)

1 Important issues for State Schedule of Rates

Section A - General Notes

i) Schedule of Rates prepared for the year 2020-21 is operative from 01 October, 2020 and is applicable for all the Districts of Maharashtra. Schedule of Rates are worked out considering the rates of materials prevailing in all districts. If the basic rates of murum, sand, metal and bricks for a particular district deviates from the rates considered in the SSR, then the Superintending Engineer, PWD of that particular district may change rate/s for that particular item/s. While doing so concerned Superintending Engineer, PWD shall keep the reasons in writing on record.

ii) For the rates in Corporation area, Municipal Council Areas, Notified Tribal area, Hilly inaccessible areas & Central Jail premises, Sugarcane factory area, Tiger Project areas, Coal / Manganese /Lime Mining area, Naxalite affected area and Mental Hospital premises & Pandamic Special Centers, an increase of percentages over the normal schedule of rates (Basic completed item Rates) prescribed for the year 2020-21 are as follows:-

	Specific Areas	Percentage in Rates
a)	Corporation Areas	5%
b)	Municipal Council Areas	4%
c)	Sugarcane factory area (within 10 km. radius)	5%
d)	Notified Tribal Areas / Hilly Area / Inaccessible areas	10%
e)	Inside Premises of Central Jail, Mental Hospital, Raj Bhavan, Yerawada Printing press.	15%
f)	Tiger project area in Amaravati, Yavatmal, Wardha, Nagpur, Bhandara, Gondia & Chandrapur Distt.	20%
g)	Coal / Lime / Manganese Mining area	5%
h)	Naxalite affected area	20%
i)	Metropolitan areas notified by UDD excluding Municipal Corporation and Council areas	2%

In addition to this, for items involving construction and repair of sewer lines/ storm water drains, concerned Superintending Engineer, PWD shall increase the rate accordingly

Issue rates of Schedule 'A' materials for above notified area shall be increased by respective percentage. The above percentage shall be applied on the cost of items after deducting the cost of Specified materials, if issued on Schedule 'A'.

The Superintending Engineers (PWD) shall Specify the Sugar factory areas/ Coal mine areas/ Notified Tribal areas under their circles.

The Notified Hilly / Inaccessible areas shall be considered as per Government Resolution, Planning Department No. DVK-2009/CR-6/D-1483 Dated 18.01.2010 & 31.01.2018, No. DVK-2015/CR-42/D-1481A Dated 15.06.2018 & 20.11.2018 and DVK-2015/CR-35/D-1483 Dated 31.07.2015 and applicable GRs of Planning Department.

The Superintending Engineer, PWD shall decide necessary increase in ii(a) above if required for traffic restriction hours and Labour rates for night working.

1) For all district excluding Gadchiroli, following instructions are applicable:-
The works which are pertaining to inside premises of central jail, Mental Hospital, Raj Bhavan, Yerawada Printing press as well as in Corporation area, an increase of percentage over normal scheduled rates shall be considered both simultaneously e. g. If central jail is situated in corporation area an increase of 5% for corporation area and 15% for jail premises total 20% shall be considered.

सत्यमेव जयते

GOVERNMENT OF MAHARASHTRA
FOREST DEPARTMENT

महाराष्ट्र वन विभाग

…….. DIVISION

…… RANGE

DETAIL ESTIMATE

GPS READING

N

E

Name Of Work :- Construction of Women's Rest Room (For Ladies Staff) at …….. in Forest Comp. No……. in ……. Beat in ……Round in …….. Range of ……Forest Division.

Work Portion Amount Rs. 1291200.00

Gross Total Amount Rs. 1386600.00

FACE SHEET

Division	**:- …….. Division.**
Sanction Estimate	:-
Fund Head	:-
Major Head	:-
Minor Head	:-
Service Head	:-
Departmantal Head	:-

Estimate framed in the office of the Forest Enginee Office,Nagpur and the probeble expenses that will incurred in the Construction of Womens Rest Room (For Ladies Staff)

Name Of Work :- Construction of Women's Rest Room (For Ladies Staff) at …….. in Forest Comp. No……. in ……. Beat in …….Round in …….. Range of …….Forest Division.

Work Portion Amount Rs. 1291200.00

Estimated Gross Amount Rs. 1386600.00

Administrative approved under No. Dated

Technically sanctioned under No. Dated

Estimate prepared by Shri

Estimate Checked by Shri

Call of Authority **Dy. Conservator of Forest, …….. Division.**

General Description as per separate sheet attached

Note:- 1 As per the Govt. of Maharashtra Revenue and forest Department's notification Royalty charges Rs 600/Brass,i.e.Rs 211.95/Cum.agency will have to produce documentary evidences to the concerned executive engineer or concern authority.as regards payment made by agency to revenue department toward royalty charges. If such documentary evidence is not produced to the to the concerned executive engineer or concern authority the componant of royalty charges as contemplated in the item shall not be paid to the agency.as per the note in DSR royalty charges are included in the respective all item and supply of natural minarals i.e.Rubble,Metal,Sand,Murrum etc.Hence deduction for the same is made from the agency.

Note:- 2 While executing the work the reinforcement detail i.e. Diameter of bar,Length of individual bar,No of Bar,etc.should be actualy recorded in the M.B.(Measurement Book)as laid on site for respective RCC Items.the Quantity shall be calculated on the basis of weight per meter lengthof respective diameter of the bar.and the payment should be made on this actually used steel for respective works.do not copy the quantity which is considered as on adhoc basis in the estimate.

RFO ACF

Dy. Conservator of Forest
…….. Division,……..

GENERAL REPORT

Name Of Work :- Construction of Women's Rest Room (For Ladies Staff) at …….. in Forest Comp. No……. in ……. Beat in …….Round in …….. Range of …….Forest Division.

Work Portion Amount Rs. 1291200.00

Grand Total Amount Rs. 1386600.00

Authority	**Dy. Conservator of Forest, …….. Division.**
Necessity	
Provision	**Following provision are made in this Estimate.**
Foundation	It is Frame structure.depth of excavation 1.50 M. below ground level as hard strata is available at this depth. P.C.C - 1:4:8 bed 15cm.Thick. Plinth level 1.00 m. above G.L.,Coping in C.C.1:2:4 ,10 cm. Thick. Column C1 Footing size 1.20 x.1.50 & Column size 0.23 x 0.30 m.in M20 R.C.C. Beam at G.L.,Plinth Level & Slab Level in M20 Beam at G.L. 0.15m Below G.L. & Size 0.23 x 0.45m. Beam at Slab Level. Size 0.23 x 0.30m. Lintel Beam Size 0.23 x 0.15m. R.C.C. Slab,Roof Level in M20, 0.12m.Thick R.C.C. Slab, over W.C.& Bath in M20, 0.10m.Thick R.C.C. Chajja & Lintel in M20
Super structure	B.B.Masonary in CM 1:6 with plaster finishing to out side sand faced plaster & in side plaster surface of wall.also washable oil bound distemper in side, water proof cement paint for out side
Door & Window	D1&D2 - In Room single leaf panelled door Shutter door frame. D3 - In WC & Bath FRP single leaf door shutter & frames of C.C. M40. D1&D2 - Door Frames of C.C. M40. W - Aluminium Sliding Window.
Flooring	Vetrified tiles flooring for Hall, Bed Room,Kitchen,Bath,WC Ceramic Tiles with Dado.W.C. Pan,Nahani Trap,Inspection Chambers,SepticTank & Other provisions are also included in this estimate.
Rates	**Rates adopted in the Estimate are as per SSR 2021-22 w.e.f 06-08- 2021**
Specification	**The work will be carried out as per standard specification of Public Work Department, and as directed by Engineer-incharge from time to time**
Lead Statement	**Lead for Material Considered in Estimate is Given as per RFO…….**

Important issues for State Schedule of Rates

Section A - General Notes.

iv) Taxes and Govt. Circulars.

a) Material Rates are exclusive of GST (Goods & Service Tax). Rates for completed items are also exclusive of GST. While preparing the estimates, separate provision for GST shall be made in recapitulation sheet

b) As per Govt. Circular No.SSR - 1090/CR-6453/PLN-3 Dt. 14.07.1993 and as per GR of Industries and power Department No. BCA–2009/CR-108/Labour 7-A dated 17.06.2010, Labour Cess at 1% has been considered separately in Rate Abstracts

v) The Government of Maharashtra, Revenue and Forest Departments Gazette No.67 Dt.15 May 2015, States that the Royalty charges of Rs. 600/- Per Brass (i.e. Rs.211.95 /cum.) are to be considered.The surcharge levied on Royalty shall also be payable to the contractor in following manner . Royalty charges on all minor minerals do not form part of Rate Abstract and shall be reimbursed separately on production
of proof to that effect. The Superintending Engineer, Shall be modify and circulate Royalty charges in case of any modification are made by Govt. of Maharashtra. Royalty charges against estimated quantity
shall be included in Recapitulation sheet.

vi) For crusher metal separate royalty charges shall not be considered as it is a finished product.

In SSR for Items of Comlpeted Ite Rates which are inclusive of Material i.e. Rubble, murum,Soil,60mm/40mm Metal(Hand Brocken) Royalty Charges are not Includedin the rates.Prevalent Royalty Charges Including Surcharge shall be Separetely Considerd while prepairing the Estimate and shall be part of Shedule -B of Tender.Any revision in Royalty Charges and Surchage shall be included in the rate analysis of the respective item. If there is veriation in these rates the differance shall be paid extra over the items to the contractor and shall be recovered if these rates are reduced by Govt. i.e. Revenue Department.

Section B - Instructions for preparing estimate.

1A) As per revised circular issued by Dy . Directorate of Insurance Maharashtra State vide letter No . क्र. प्रविनी - 2314/ देय□ □□ात रक्□म/ संं□ार्/ ण अभि-3,ददनां□ 31/03/2015, Insurance towards labour is not considered in rate abstract of SSR items. Provision for the same shall be made in the recapitulation sheet as follows .

a) Work value upto :- 25.00 Lakhs - 1.00%

b) Work value above :- 25.00 Lakhs- 0.50%

1B) As per revised circular issued by Dy . Directorate of Insurance Maharashtra State vide letter No . क्र. प्रविनी - 2314/ देय□ □□ात रक्□म/ संं□ार्/ ण अभि-3,ददनां□ 31/03/2015, Insurance towards labour is not considered in rate abstract of SSR items. Provision for the same shall be made in the recapitulation sheet as follows .

xvii) While preparing Estimate, actual and practical distance of worksite from quarries shall be taken and adequate quantity of good quality material shall be ascertained by concerned Executive Engineer. Extra care shall be taken in case of lead of murum and sand.

xviii) Provision shall be made for taking Photographs, Video Shooting, load testing etc. separately in detail estimate and shall form part of Schedule B .

Section C - Testing of Materials

i) Laboratory testing charges are not considered in the Rate Abstracts. Wherever required separate item shall be taken in the estimate for material testing charges, on the basis of testing frequency and charges fixed by Vigilance & Quality Control Circle, for the current year and shall form part of Schedule B of tender

ii) For Specific tests like span load tests, plate/ pile load test etc. which are not included in the rate analysis of item, the rates for these tests shall be prepared on the basis of rates approved by M.E.R.I./ any competent Institute of Govt. of Maharashtra or Govt. of India.

Section D - Instructions for tender Clause

i) The contractor shall produce the work insurance policy, the same will be reimbursed to the contractor. If contractor fails to produce the work insurance policy, Concerned Executive Engineer shall draw the policy ,the expenditure incurred for drawing the policy shall be recovered from the 1st R.A. bill of the contractor as penalty to the Contractor.

ii) If completion period of work is Extended, then period of work Insurance must be renewed/ extended as per requirement

General Note for Execution of Work

For all items of Maintanance for Road, Buildings and Bridges - Photograps showing initial conditions and Photograps showing conditions after execution if that perticular item should be attached with Measurement book.Provision of Such items expenditure shall be made in estimate itself or through contigencies.

CERTIFICATE- the Estimate is 100% arithmatically checked by me and found to be correct.

RFO ACF

Dy. Conservator of Forest

…….. Division,……..

Name Of Work :- Construction of Women's Rest Room (For Ladies Staff) at …….. in Forest Comp. No……. in ……. Beat in ……Round in …….. Range of ……Forest Division.

RECAPITULATION SHEET

Sr. No.	ITEM OF WORK	AMOUNT (Rs.)
A	Estimated Work Portion Amount	Rs. 1073526.00
B	Add For Royalty Charges Amount	Rs. 9809.00
C	Add for Quality Control & Testing Charges	Rs. 24050.00
D	Total Amount (A + B + C) = D	Rs. 1107385.00
E	Add 12% For GST On (A)	Rs. 128823.00
F	Add 1.00% for Labour Insurance On (A)	Rs. 10735.00
G	Add 4% Contigensis On (D) = G	Rs. 44295.00
H	Total Amount Rs (D+E +F+G) = H	Rs. 1291238.00
		Say Rs. 1291200.00
I	Add 5 % for Eletricfication on (D)	Rs. 55369.00
J	Add For Furniture and Other Items (LS)	Rs. 40000.00
K	Gross Total Amount Rs (H+I+J)	Rs. 1386607.00
		Say Rs. 1386600.00

RFO

ACF

Dy. Conservator of Forest
…….. Division,……..

Name Of Work :- Construction of Women's Rest Room (For Ladies Staff) at …….. in Forest Comp. No……. in ……. Beat in ……Round in ……. Range of ……Forest Division.

ABSTRACT SHEET

Item Nos.	ITEM OF WORK	Unit	Qty.	Rate	AMOUNT (in Rs)
1	Removing grass, gazer grass and disposing off out of building premises including making clean the ground by shovel and phavaras etc. complete.	Sqmt	100.00	6.00	600.00
2	Excavation for foundation in earth, soil of all types, sand gravel and soft murum including removing the excavated material up to distance of 50m beyond the building area and all lifts,stacking and /or spreading as directed, dewatering manually ,preparing the bed for the foundation and necessary back filling,ramming, watering including shoring and strutting etc. complete .(Lift upto 1.5 m.)	Cum	12.75	193.00	2461.00
3	Excavation for foundation in Hard Murum, including removing the excavated ,material upto distance of 50 m. beyond the building area, stacking and/or spreading as directed, dewatering manually, preparing the bed for the foundation and necessary back filling,ramming watering including shoring and strutting etc. complete (Lift upto 1.50 m)	Cum	15.45	212.00	3275.00
4	Providing and laying Cast in situ/Ready Mix cement concrete in M-10 of trap/ granite/ quartzite/gneiss metal for foundation and bedding including bailing out water, formwork, laying/pumping, compacting, roughening them if special finish is to be provided, finishing if required and curing complete, with fully automatic micro processor based PLC with SCADA enabled reversible Drum Type mixer /concrete Batch mix plant (Pan mixer) etc. complete. With natural sand/V.S.I. quality Artificial Sand	Cum	3.32	5774.50	19171.00
5	Providing and laying Cast in situ/Ready Mix cement concrete M-20 of trap / granite /quartzite/ gneiss metal for R.C.C. work in foundations like raft, strip foundations, grillage and footings of R.C.C. columns and steel stanchions etc. columns as per detailed designs and drawing or as directed including centering, formwork, cover blocks, laying / pumping, compac tion finishing the formed surfaces with cement mortar 1:3 of sufficient minimum thickness to give a smooth and even surface or roughening if special finish is to be provided and curing etc. complete,(Excluding reinforcement and structural steel).with fully automatic micro processor based PLC with SCADA enabled reversible Drum Type mixer/ concrete Batch mix plant (Pan mixer) etc. complete. With natural sand/V.S.I. quality Artificial Sand	Cum	3.71	6890.85	25565.00
6	Providing second class Burnt Brick masonry with conventional/ I.S. type bricks in cement mortar 1:6 in foundations and plinth of inner walls/ in plinth external walls including bailing out water manually , striking joints on unexposed faces, raking out joints on exposed faces and watering etc. Complete.	Cum	5.11	7656.25	39123.00
7	Filling in plinth and floors with contractors material/brought from outside and approved by Engineer incharge in layers of 15 cm to 20 cm including watering and compaction etc. complete.	Cum	7.74	803.05	6216.00
8	Providing soling using 80 mm size trap metal in 15 cm. layer including filling voids with Crushed sand/grit, ramming, watering etc. complete.	Cum	4.81	1678.70	8075.00

Name Of Work :- Construction of Women's Rest Room (For Ladies Staff) at …….. in Forest Comp. No……. in ……. Beat in ……Round in ……. Range of ……Forest Division.

ABSTRACT SHEET

Item Nos.	ITEM OF WORK	Unit	Qty.	Rate	AMOUNT (in Rs)
9	Providing and laying Cast in situ/Ready Mix cement concrete M-20 of trap / granite /quartzite/ gneiss metal for R.C.C. beams and lintels as per detailed designs and drawings or as directed including centering, formwork,cover blocks, laying /pumping, compactionand roughening the surface if special finish is to be provided and curing etc. complete. (Excluding reinforcement and structural steel). with fully automatic micro processor based PLC with SCADA enabled reversible Drum Type mixer/ concrete Batch mix plant (Pan mixer) etc. complete. With natural sand/V.S.I. quality Artificial Sand	**Cum**	**5.46**	**11707.85**	**63886.00**
10	Providing and laying Cast in situ/Ready Mix cement concrete in M-20 of trap/ granite/ quartzite/ gneiss metal for R.C.C. pardi of required thickness including centering, formwork, cover blocks, laying/pumping, compacting and roughening them if special finish is to be provided and curing complete.(Excluding reinforcement and structural steel).with fully automatic micro processor based PLC with SCADA enabled reversible Drum Type mixer/ concrete Batch mix plant (Pan mixer) etc. complete. With natural sand/V.S.I. quality Artificial Sand	**Cum**	**2.77**	**14916.85**	**41320.00**
11	Providing and laying Cast in situ/Ready Mix cement concrete M-20 of trap/ granite / quartzite/ gneiss metal for R.C.C. slabs and landings as per detailed designs and drawings including centering, formwork, cover blocks, laying/pumping, compaction finishing the formed surfaces with cement mortar 1:3 of sufficient minimum thickness to give a smooth and even surface or roughening if special finish is to be provid ed and curing etc. complete, (Excluding reinforcement and structural steel).with fully automatic micro processor based PLC with SCADA enabled reversible Drum Type mixer/ concrete Batch mix plant (Pan mixer) etc. complete. With natural sand/V.S.I. quality Artificial Sand	**Cum**	**9.16**	**14167.85**	**129792.00**
12	Providing and laying Cast in situ/Ready Mix cement concrete M-20 of trap / granite /quartzite/ gneiss metal for R.C.C. columns as per detailed designs and drawing or as directed including centering, formwork, cover blocks, laying/pumping, compaction finishing the formed surfaces with cement mortar 1:3 of sufficient minimum thickness to give a smooth and even surface or roughening if special finish is to be provided and curing etc. complete,(Excluding reinforcement and structural steel).with fully automatic micro processor based PLC with SCADA enabled reversible Drum Type mixer/ concrete Batch mix plant (Pan mixer) etc. complete. With natural sand/V.S.I. quality Artificial Sand	**Cum**	**2.09**	**13211.85**	**27613.00**
13	Providing and fixing in position Reinforcement of various diameters for R.C.C. pile caps, footings, foundations, slabs, beams and columns, canopies, staircases, newels, chajjas, lintels, pardies, coping, fins, arches etc. as per detailed design and drawings and schedules including cutting, bending, hooking the bars, binding with wires or tack welding and supporting as required completed.	**MT**	**2.07**	**71926.80**	**148531.00**

Name Of Work :- Construction of Women's Rest Room (For Ladies Staff) at …….. in Forest Comp. No……. in ……. Beat in ……Round in ……. Range of ……Forest Division.

ABSTRACT SHEET

Item Nos.	ITEM OF WORK	Unit	Qty.	Rate	AMOUNT (in Rs)
14	Providing second class Burnt Brick masonry with conventional/ I.S. type bricks in cement mortar 1:6 in superstructure including striking joints, raking out joints, watering and scaffolding etc. Complete	Cum	11.64	7883.25	91797.00
15	Providing second class Burnt Brick masonry with conventional / I.S. type bricks in cement mortar 1:4 in half brick thick wall including mild steel longitudinal reinforcement of 2 bars of 6 mm. diameter/2 hoop iron strips 25 mm x 1.6 mm placed at every third course, properly bent and bounded at ends scaffolding, racking out joints and watering complete.	Sqmt	27.27	1059.85	28902.00
16	Providing and Laying Ceramic tiles of approved quality required size and thickness for flooring in required position laid on a bed of 1:4 cement mortor including cement float,filling joint with white/colour cement slurry cleaning curing etc. complete.	Sqmt	3.72	1162.40	4324.00
17	Providing and laying ceramic tiles of having size 30 cm. x 30 cm. and confirming to corresponding I.S. for Dado and skirting in required position with readymade adhesive mortar of approved quality on plaster of 1:2 cement mortar including joint filling with white/ colour cement slurry cleaning curing etc. complete.	Sqmt	14.81	1231.40	18237.00
18	Providing and laying vitrified rustic matt stone finish tiles For Flooring having size 590 mm to 605 mm x 590 mm to 605 mm of 8 to 10mm thickness and confirming to IS. 15622-2006 (Group Bla) of approved make, shade and pattern for flooring in required position laid ?on a bed of 1:4 cement mortar including neat cement float, filling joints, curing and cleaning etc. complete.	Sqmt	19.91	1749.10	34825.00
19	Providing and laying vitrified rustic matt stone finish tiles For Skirting having size 590 mm to 605 mm x 590 mm to 605 mm to 8 to 10mm thickness and confirming to IS. 15622-2006 (Group Bla) of approved make, shade and pattern for flooring in required position laid ?on a bed of 1:4 cement mortar including neat cement float, filling joints, curing and cleaning. etc. complete.	Sqmt	3.19	1820.10	5806.00
20	Providing and laying machine cut machine polished machine cut Kota stone slabs 20 to 25 mm thick for treads and risers of steps and staircases, with rounded nosing for the treads on a bed of 1:4 cement mortar including cement float, filling joints with neat cement slurry, curing, polishing and cleaning etc. complete.	Sqmt	7.03	1499.45	10541.00

Name Of Work :- Construction of Women's Rest Room (For Ladies Staff) at …….. in Forest Comp. No……. in ……. Beat in ……Round in ……. Range of ……Forest Division.

ABSTRACT SHEET

Item Nos.	ITEM OF WORK	Unit	Qty.	Rate	AMOUNT (in Rs)
21	Providing and fixing in position. (as per I.S.1868 / 1982) Aluminium sliding window of two tracks with rectangular pipe having overall dimension 63.50 x 38.10 x 1.02 mm at weight 0.547 kg/Rmt. and window frame bottom track section 61.85 x 31.75 x 1.20 mm at weight 0.695 kg/Rmt. Top and side track section 61.85 x 31.75 x 1.30 mm at weight 0.659 kg/Rmt. The shutter should be of bearing bottom 40 x 18 x 1.25 mm at weight 0.417 kg/Rmt. Inter locking section 40 x 18 x 1.10 mm at weight 0.469 kg/Rmt. And handle section 40 x 18 x 1.25 mm at weight 0.417 kg/Rmt. and top section 40 x 18 x 1.25 mm at weight 0.417 kg/Rmt. As per detailed drawings and as directed by Engineer in charge with all necessary Aluminium sections fixtures and fastenings such as roller bearing in nylon casting and self locking catch fitted in vertical section of shutter including 5 mm thick plain glass with all required screws and nuts etc, complete. With powder coating without box	**Sqmt**	**2.88**	**4769.00**	**13735.00**
22	Providing and fixing in position powder coated aluminium louvered windows / ventilator of various sizes with powder coating as per detailed drawing and specifications including aluminium frames 80 x 38 mm x 1.22 mm box type, 5 mm thick sheet glass louvers, of approved quality etc. complete.	**Sqmt**	**0.54**	**3107.00**	**1678.00**
23	Providing and fixing M40 grade thick vibrated pull cast or similar type concrete frame with chamfer conforming to I.S. 65241983 having 6 mm dia. bars 3 Nos. And stirrups @250 mm c/c and fixing in wall with 6 Nos of hold fast of 12 mm dia bars 500 mm long including primer and oil painting etc, complete) frame size 60 mm x 100 mm.	**Rmt**	**19.95**	**899.00**	**17935.00**
24	Providing and fixing single or double leaf panelled door shutter excluding frame with glazed openable fanlight shutter 35 mm thick as per detailed drawing consistingpanelled vertical styles 100 mm x 35 mm and lock and bottom rail 200 mm x 35 mm and panels 12 mm thick both side commercial ply faced particle board including stainless steel fixtures and fastening and T.W. beading at junctions of panel inserts and as instructed by the Engineer in charge including 3 coats of oil painting etc. complete.	**Sqmt**	**1.89**	**6723.00**	**12706.00**
25	Providing and fixing fiber glass reinforced polyster door shutter 30 mm thick as per IS 14856 (2000) (Reaffirmed 2006) without ventilator including chromium plated fixtures and fastening with chromium plated handles on both sides, etc complete	**Sqmt**	**4.73**	**2990.00**	**14143.00**
26	Providing sand faced plaster externally in cement mortar using approved screened sand, in all positions including base coat of 15 mm thick in cement mortar 1:4 using waterproofing compound at 1 kg per cement bag curing the same for not less than 2 days and keeping the surface of the base coat rough to receive the sand faced treatment 6 to 8 mm thick in cement mortar 1:4 finishing the surface by taking out grains and curing for fourteen days scaffolding etc.complete.	**Sqmt**	**81.17**	**608.45**	**49388.00**

Name Of Work :- Construction of Women's Rest Room (For Ladies Staff) at ……. in Forest Comp. No……. in ……. Beat in …….Round in ……. Range of …….Forest Division.

ABSTRACT SHEET

Item Nos.	ITEM OF WORK	Unit	Qty.	Rate	AMOUNT (in Rs)
27	Providing internal cement plaster 12mm. thick in single coat in cement mortar 1:4 with out Neeru Finish to concrete or brick surfaces,in all positions including scaffolding & curing etc. complete.	Sqmt	119.39	268.25	32026.00
28	Providing internal cement plaster 12mm. thick in single coat in cement mortar 1:4 with out Neeru Finish to concrete or brick surfaces,in all positions including scaffolding & curing etc. complete.	Sqmt	7.41	268.25	1988.00
29	Providing internal cement plaster 6mm. thick in a single coat in cement mortar 1:4 with out Neeru finish to concrete surface in all positions, including scaff ing and curing etc. complete.	Sqmt	79.85	199.15	15902.00
30	Providing and fixing European type wall-hung white water closet of approved make with push valve concealed type with cover plate 32mm size of approved make including soil pipe,vent pipe up to out side face of wall,100mm dia.G.I. plug bend in let pipe all fittings, cutting and making good walls,floors etc. complete.	Nos	1.00	12391.00	12391.00
31	Providing and fixing 10 cm PVC nahani trap with grating etc. complete.	Nos	1.00	496.00	496.00
32	Providing and fixing H.D.P container Syntex or alike one piece moulded water tank made out of high density polythyler and built corrugated inclusive of delivery up to destination hoisting and fixing of accessories such as inlet,outlet overflow pipe inclusive of all tanks capacity between 200 to 1000 liters	Ltr	1000.00	13.00	13000.00
33	Providing & Constructing Brick masonry base for bolding P.V.C. Water Storage tank in Position.	LS	1.00	1500.00	1500.00
34	Providing and constructing Brick Masonry Inspection Chamber 60cm x 45cm x 90cm including 1:4:8 cement concrete foundation 1:2:4 cement concrete channels half round G.S.W. pipes, Brick Masonry, plastering from inside and with frame fixed in cement concrete with R.C.C. Cover medium duty 140 kg with frame etc complete.	Nos	3.00	7818.00	23454.00
35	Providing and fixing on walls/ ceiling/ floor Required dia. CPVC pipe with necessary fittings, remaking good the demolished portion etc. complete. Including removing existing pipe line if necessary and conveying and stacking the same in PWD chowky or as directed etc. complete.				
	15 mm dia Internal connection	Rmt	10.00	246.00	2460.00
	20 mm dia Internal connection	Rmt	10.00	285.00	2850.00
	25mm dia External connection	Rmt	10.00	336.00	3360.00
36	Providing and fixing screw down required Dia. wheeled stop tap of brass including necessary sockets /union nut testing etc. complete. (prior approvd of sample & brand by Ex. Engineer before use)				
	15 mm dia	Nos	1.00	468.00	468.00
	20 mm dia	Nos	1.00	605.00	605.00
	25 mm dia	Nos	1.00	785.00	785.00
37	Providing and fixing 15 mm dia. screw down bib/ stop tap of brass including necessary socket union nut complete.	Nos	2.00	637.00	1274.00
38	Providing soak pit of size 120cm x 120cm x 120cm including excav ating and filling with brick-bats.	Nos	1.00	2683.00	2683.00

Name Of Work :- Construction of Women's Rest Room (For Ladies Staff) at …….. in Forest Comp. No……. in ……. Beat in ……Round in ……. Range of ……Forest Division.

ABSTRACT SHEET

Item Nos.	ITEM OF WORK	Unit	Qty.	Rate	AMOUNT (in Rs)
39	Providing and fixing fittings and accessories such as ball cock, over flow pipe with mosquito proof coupling, scour pipe with plug, manhole with cover and locking arrangement, connecting pipes and embedding intake and outflow pipes into the R.C.C. water reservoir.	LS	1.00	1500.00	1500.00
40	Providing and applying two coats of exterior weather shield paint of approved manufacture and of approved colour to the plastered surfaces including cleaning ,preparing the plaster surface ,applying primer coat ,scaffolding if necessary, and watering the surface for two days etc complete. NOTE: For Item No. 15 to 18 prior approval of Superintending Engineer will be necessary	Sqmt	88.58	238.00	21082.00
41	Providing and applying putty to new plastered surfaces in two coats to receive approved paint in all positions including all materials ,labour scaffolding and curing etc. complete.	Sqmt	199.24	87.00	17334.00
42	Providing and applying plastic emulsion paint of approved quality, colour and shade to old and new surfaces in two coats including scaffolding, preparing the surface. (excluding the primer coat)etc. complete.	Sqmt	199.24	70.00	13947.00
43	Providing and fixing mild steel grill work for windows, ventilators etc. 20 kg/sqm as per drawing including fixtures, necessary welding and painting with one coats of anticorrosive paint and two coats of oil painting complete.	Sqmt	4.50	1845.00	8303.00
44	Providing and laying cement concrete flooring 50 mm thick with M15 cement concrete laid to proper level and slope in alternate bays including compaction filling joints, marking lines to give the appearance of tiles of 30cm x 30cm or other size laid diagonally/ square etc finishing smooth (with extra cement) in any colour as directed and curing etc. complete. With Natural Sand	Sqmt	1.37	564.20	773.00
45	Providing and fixing U.P.V.C.Soil /Vent/ Waste SWR Pipe of required diameter conforming to I.S.13592 & IS.4985 with stand continous internal hydrooulic pressure of 4kg./cm.sq.including fixtures and fittings such as bend,tees,single junction,double junction joining with rubber ringes & lubricants on wall by means of clipes or in ground including excavation laying refilling the trench testing etc.complete. (prior approvd of sample&brand by Ex. Engineer before use)				0.00
	a) 75 mm Dia	Rmt	3.00	390.00	1170.00
	b) 110 mm Dia	Rmt	10.00	535.00	5350.00
46	Providing and fixing reinforced cement concrete cover of size 60 cm x 45 cm with frame over inspection chamber etc. complete. Heavy duty (160 kg)	Nos	2.00	5024.00	10048.00
47	Providing and fixing coloured glazed earthenware Wash Hand Basin of 45 cm x 30 cm size including cold water pillar tap/cold and hot water pillar tap brackets, rubber plugs and brass chain, stop tap and necessary pipe connection including P.V.C. waste pipe and trap up to the outside face of the wall. Making good the damaged surface, testing etc. complete.	Nos	1.00	5161.00	5161.00

Name Of Work :- Construction of Women's Rest Room (For Ladies Staff) at …….. in Forest Comp. No……. in ……. Beat in …….Round in ……. Range of ……Forest Division.

ABSTRACT SHEET

Item Nos.	ITEM OF WORK	Unit	Qty.	Rate	AMOUNT (in Rs)
48	Providing and fixing 15cm x 10cm salt glazed stoneware gully trap in cement concrete 1:4:8 outside the building including cast iron grating in the sink, connecting glazed stoneware pipe, brick masonry chamber with cast iron lid and cast iron grating for the gully trap.	Nos	2.00	1374.00	2748.00
49	Providing and applying water proofing treatment using acrylic polymer modified cement based water proofing coating with fibre glass mesh mixing at the rate of powder to liquid (2:1) by weight covering 9 to 10 sqm /kg with two coat using Dr. Fixit or alike of chemicals for masonry and concrete surface by brush covering 07 years guarantee on Stamp Papers etc. complete.	Sqmt	44.44	610.10	27112.00
50	Providing water proofing in W.C. and bath including Brick Bat Coba in all position consisting of specialised approved waterproofing compound and materials as per manufacturers specifications and covering 10 years guarantee on court fee stamp paper of Rs.100/- including all lead, lift and ponding test etc. complete.	Sqmt	0.93	407.45	379.00
51	Providing and fixing mild steel grill railing 20 kg/sq.m with teak wood hand rail of size 75mm x 60 mm.and sill of 75mm.x 25 mm.and newel posts for staircases, including fabricating, fixtures, erecting, painting the grill work with one coat of anti-corrosive paint and two coats of oil painting with approved colour and polishing the sill, hand rail and the newel post with french polish.	Sqmt	5.62	2890.00	16242.00
52	Providing and fabricating structural steel work in rolled sections like joists, channels, angles, tees etc. as per detailed design and drawings or as directed including cutting, fabricating, hoisting, erecting, fixing in position making riveted / bolted / welded connections without connecting plates, braces etc. and including one coat of anticorrosive paint and over it two coats of oil painting of approved quality and shade complete.	MT	0.09	85585.00	7490.00
				Total Work Portion Amount	**1073526.00**

Name Of Work :- Construction of Women's Rest Room (For Ladies Staff) at …….. in Forest Comp. No……. in …… Beat in ……Round in …….. Range of ……Forest Division.

MEASUREMENT SHEET

ITEM OF WORK	Unit	NO	L	B	D/H	QTY.
ITEM NO.1						
Removing grass, gazer grass and disposing off out of building premises including making clean the ground by shovel and phavaras etc. complete.						
As directed by Engineer in charge.						
S.S.R. Item No.21.34/Page No.134						
Total Area For Womens Rest Room	Sqmt	1.00	10.00	10.00		100.00
					Net Qty.	**100.00**
ITEM NO.2						
Excavation for foundation in earth, soil of all types, sand gravel and soft murum including removing the excavated material up to distance of 50m beyond the building area and all lifts,stacking and /or spreading as directed, dewatering manually ,preparing the bed for the foundation and necessary back filling,ramming, watering including shoring and strutting etc. complete .**(Lift upto 1.5 m.)**						
Spec.No. : Bd.A.1 Page No. 259						
S.S.R. Item No.21.02/Page No.131						
Excavation for Footing F1	Cum	6.00	1.40	1.70	0.60	8.57
Septic Tank	Cum	1.00	2.37	1.46	0.60	2.08
For Vertical Direction PB1 & PB2	Cum	2.00	1.40	0.30	0.40	0.33
For Vertical Direction PB3 & PB4	Cum	2.00	0.97	0.30	0.40	0.23
For Vertical Direction PB5 & PB6	Cum	2.00	1.52	0.30	0.40	0.36
For Horizantal Direction PB7,PB8,PB9	Cum	3.00	3.25	0.30	0.40	1.17
					Net Qty.	**12.75**
ITEM NO.3						
Excavation for foundation in Hard Murum, including removing the excavated ,material upto distance of 50 m. beyond the building area, stacking and/or spreading as directed, dewatering manually, preparing the bed for the foundation and necessary back filling,ramming watering including shoring and strutting etc. complete **(Lift upto 1.50 m)**						
[Spec.No. :Bd.A.2 Page No.259						
S.S.R. Item No.21.06/Page No.131						
Excavation for Footing F1	Cum	6.00	1.40	1.70	0.90	12.85
Septic Tank	Cum	1.00	2.37	1.46	0.75	2.60
					Net Qty.	**15.45**

Name Of Work :- Construction of Women's Rest Room (For Ladies Staff) at …….. in Forest Comp. No……. in …… Beat in ……Round in …….. Range of ……Forest Division.

MEASUREMENT SHEET

ITEM OF WORK	Unit	NO	L	B	D/H	QTY.
ITEM NO 4						
Providing and laying Cast in situ/Ready Mix cement concrete in M-10 of trap/ granite/ quartzite/gneiss metal for foundation and bedding including bailing out water, formwork, laying/pumping, compacting, roughening them if special finish is to be provided, finishing if required and curing complete, with fully automatic micro processor based PLC with SCADA enabled reversible Drum Type mixer /concrete Batch mix plant (Pan mixer) etc. complete. With natural sand/V.S.I. quality Artificial Sand						
[Spec.No.:Bd.E.1 Page No. 287						
S.S.R. Item No.24.01/Page No.131						
PCC Below Footing F1	Cum	6.00	1.40	1.70	0.15	2.14
For Steps Front	Cum	1.00	3.00	1.05	0.10	0.32
	Cum	1.00	1.20	1.05	0.10	0.13
					Qty.(A)	**2.59**
Septic Tank						
Below Wall	Cum	1.00	2.37	1.46	0.20	0.69
For Floor bedding	Cum	1.00	1.71	0.80	0.03	0.04
					Qty.(B)	**0.73**
				Total Qty.	**(A+B)**	**3.32**
ITEM NO.5						
Providing and laying Cast in situ/Ready Mix cement concrete M-20 of trap / granite /quartzite/ gneiss metal **for R.C.C. work in foundations like raft,** strip foundations, grillage and footings of R.C.C. columns and steel stanchions etc. columns as per detailed designs and drawing or as directed including centering, formwork, cover blocks, laying / pumping, compac tion finishing the formed surfaces with cement mortar 1:3 of sufficient minimum thickness to give a smooth and even surface or roughening if special finish is to be provided and curing etc. complete,(Excluding reinforcement and structural steel).with fully automatic micro processor based PLC with SCADA enabled reversible Drum Type						
Bd.F.3 Page No. 298 & B.7,page No.38						
S.S.R. Item No.25.11/Page No.133						
RCC for Footing						
Rect. Poration Qty for Footing F1	Cum	6.00	1.20	1.50	0.15	1.62
					Qty.(A)	**1.62**

Name Of Work :- Construction of Women's Rest Room (For Ladies Staff) at …….. in Forest Comp. No……. in …… Beat in ……Round in …….. Range of ……Forest Division.

MEASUREMENT SHEET

ITEM OF WORK	Unit	NO	L	B	D/H	QTY.
Qty. For Trapezedoal Poration of F1 Footing h/3 x {(A1+A2) +√A1A2)}						
0.45/3 x (1.80+0.098)+{√1.80+0.098)} =0.348	Cum	6.00		0.348		2.09
					Qty.(B)	**2.09**
				Net Qty.	**(A+B)**	**3.71**
ITEM NO 6						
Providing second class Burnt Brick masonry with conventional/ I.S. type bricks in cement mortar 1:6 in **foundations and plinth** of inner walls/ in plinth external walls including bailing out water manually , striking joints on unexposed faces, raking out joints on exposed faces and watering etc. Complete.						
Bd.G.1 Page No. 313						
S.S.R. Item No.27.01/Page No.144						
Burnt Brick Masonry For Plinth						
B/W Betw. Coln to Coln Vertical Direction	Cum	2.00	2.80	0.23	0.45	0.58
B/W Betw. Coln to Coln Vertical Direction	Cum	2.00	2.37	0.23	0.45	0.49
B/W Betw. Coln to Coln Horizantall Direction	Cum	3.00	4.42	0.23	0.45	1.37
Step 1	Cum	1.00	3.00	0.90	0.15	0.41
	Cum	1.00	1.20	0.90	0.15	0.16
Step 2	Cum	1.00	2.40	0.60	0.15	0.22
	Cum	1.00	1.20	0.60	0.15	0.11
Step 3	Cum	1.00	2.10	0.30	0.15	0.10
	Cum	1.00	1.20	0.30	0.15	0.05
					Qty.(A)	**3.48**
Septic Tank						
Long Wall	Cum	2.00	2.17	0.23	1.15	1.15
Cross Wall	Cum	2.00	0.80	0.23	1.15	0.42
Pillar for Vent Pipe	Cum	1.00	0.35	0.35	0.45	0.06
					Qty.(B)	**1.63**
				Net Qty.	**(A+B)**	**5.11**
ITEM NO 7						
Filling in plinth and floors with contractors material/brought from outside and approved by Engineer incharge in layers of 15 cm to 20 cm including watering and compaction etc. complete.						
Bd.A.11 Page No. 263						
S.S.R. Item No.21.37/Page No.117						
For Main Hall	Cum	1.00	3.05	4.42	0.37	4.99
For Wash Area	Cum	1.00	3.05	2.44	0.37	2.75
					Net Qty.	**7.74**

Name Of Work :- Construction of Women's Rest Room (For Ladies Staff) at …….. in Forest Comp. No……. in …… Beat in ……Round in …….. Range of ……Forest Division.

MEASUREMENT SHEET

ITEM OF WORK	Unit	NO	L	B	D/H	QTY.
ITEM NO 8						
Providing soling using 80 mm size trap metal in 15 cm. layer including filling voids with Crushed sand/grit, ramming, watering etc. complete.						
Spec.:As directed by Engineer-in-charge.						
S.S.R. Item No.21.40/Page No.117						
For Main Hall	Cum	1.00	3.05	4.42	0.23	3.10
For Wash Area	Cum	1.00	3.05	2.44	0.23	1.71
					Net Qty.	**4.81**
ITEM NO.9						
Providing and laying Cast in situ/Ready Mix cement concrete M-20 of trap / granite /quartzite/ gneiss metal **for R.C.C. beams and lintels** as per detailed designs and drawings or as directed including centering, formwork,cover blocks, laying /pumping, compactionand roughening the surface if special finish is to be provided and curing etc. complete. (Excluding reinforcement and structural steel). with fully automatic micro processor based PLC with SCADA enabled reversible Drum Type mixer/ concrete Batch mix plant (Pan mixer) etc. complete. With natural sand/V.S.I. quality Artificial Sand						
Bd.F.6 Page No. 300 & B.7,page No.38						
S.S.R. Item No.25.50/Page No.135						
A) Plinth Beam						
B/W Betw. Coln to Coln Vertical Direction	Cum	2.00	2.80	0.23	0.45	0.58
B/W Betw. Coln to Coln Vertical Direction	Cum	2.00	2.37	0.23	0.45	0.49
B/W Betw. Coln to Coln Horizantall Direction	Cum	3.00	4.42	0.23	0.45	1.37
PB for Changing Room Cross wall	Cum	2.00	2.44	0.23	0.30	0.34
					Total (A)	**2.78**
(B) Slab Level Beams (Excluding Slab Thickness)						
B/W Betw. Coln to Coln Vertical Direction	Cum	2.00	2.80	0.23	0.35	0.45
B/W Betw. Coln to Coln Vertical Direction	Cum	2.00	2.37	0.23	0.35	0.38
B/W Betw. Coln to Coln Horizantall Direction	Cum	3.00	4.42	0.23	0.35	1.07
PB for Changing Room Cross wall	Cum	1.00	2.44	0.23	0.35	0.20
					Total (B)	**2.10**
(C) Lintel Beams :-						
Lintel Over Door- D	Cum	1.00	1.13	0.230	0.23	0.060
Lintel Over Door- D2	Cum	3.00	1.10	0.115	0.23	0.087
Lintel Over Window- W	Cum	2.00	1.66	0.230	0.23	0.176
Lintel Over Ventilator- V1	Cum	1.00	0.83	0.230	0.23	0.044
Lintel Over Ventilator- V2	Cum	1.00	1.48	0.230	0.23	0.078
Lintel Over OP	Cum	1.00	1.66	0.115	0.23	0.044
					Total (C)	**0.489**

Name Of Work :- Construction of Women's Rest Room (For Ladies Staff) at …….. in Forest Comp. No……. in …… Beat in ……Round in …….. Range of ……Forest Division.

MEASUREMENT SHEET

ITEM OF WORK	Unit	NO	L	B	D/H	QTY.
(D) Coping at Sill Level :-						
Sill for Window W	Cum	2.00	1.20	0.28	0.075	0.050
Sill for Window W1	Cum	1.00	0.90	0.28	0.075	0.019
Sill for Ventilator V	Cum	2.00	0.60	0.28	0.075	0.025
					Total (D)	**0.094**
			Total	**(A+B+C+D)**		**5.457**
ITEM NO.10						
Providing and laying Cast in situ/Ready Mix cement concrete in M-20 of trap/ granite/ quartzite/ gneiss metal **for R.C.C. pardi** of required thickness including centering, formwork, cover blocks, laying/pumping, compacting and roughening them if special finish is to be provided and curing complete.(Excluding reinforcement and structural steel).with fully automatic micro processor based PLC with SCADA enabled reversible Drum Type mixer/ concrete Batch mix						
Spec.No.:Bd.F.11/Page No.304						
S.S.R. Item No.26.17/Page No.137						
a) At Plint Level						
For Fornt Side Balcony	Cum	1.00	4.00	0.60	0.10	0.24
	Cum	1.00	1.20	0.60	0.10	0.07
For Right Side Balcony	Cum	1.00	7.285	0.60	0.10	0.44
	Cum	1.00	1.20	0.60	0.10	0.07
a) At Terrace Level						
For Fornt Side & Back Side	Cum	2.00	6.10	0.70	0.10	0.85
For Right & Left Side	Cum	2.00	7.825	0.70	0.10	1.10
					Net Qty.	**2.77**
ITEM NO. 11						
Providing and laying Cast in situ/Ready Mix cement concrete M-20 of trap/ granite / quartzite/ gneiss metal **for R.C.C. slabs and landings** as per detailed designs and drawings including centering, formwork, cover blocks, laying/pumping, compaction finishing the formed surfaces with cement mortar 1:3 of sufficient minimum thickness to give a smooth and even surface or roughening if special finish is to be provid ed and curing etc. complete, (Excluding reinforcement and structural steel).with fully automatic micro processor based PLC with						
Bd.F.8 Page No. 302 and B.7, Page No.38						
S.S.R. Item No.25.70/Page No.156						
R.C.C.Slab (M-20)						
Over Main Building at Plinth Level	Cum	1.00	6.10	7.285	0.10	4.44
Over Main Building at Terrace Slab Level	Cum	1.00	6.10	7.285	0.10	4.44
Septic tank slab	Cum	1.00	2.17	1.26	0.10	0.27
				Net Qty.	**(A)**	**9.16**

Name Of Work :- Construction of Women's Rest Room (For Ladies Staff) at …….. in Forest Comp. No……. in …… Beat in ……Round in …….. Range of ……Forest Division.

MEASUREMENT SHEET

ITEM OF WORK	Unit	NO	L	B	D/H	QTY.
ITEM NO.12						
Providing and laying Cast in situ/Ready Mix cement concrete M-20 of trap / granite /quartzite/ gneiss metal **for R.C.C. columns** as per detailed designs and drawing or as directed including centering, formwork, cover blocks, laying/pumping, compaction finishing the formed surfaces with cement mortar 1:3 of sufficient minimum thickness to give a smooth and even surface or roughening if special finish is to be provided and curing etc. complete,(Excluding reinforcement and structural steel).with fully automatic micro processor based PLC with SCADA enabled reversible Drum Type mixer/ concrete Batch mix plant (Pan mixer) etc. complete. With natural sand/V.S.I. quality Artificial Sand						
Bd.F.5 Page No.300 & B.7,page No.38						
S.S.R. Item No.25.31/Page No.154						
a) For C.C. M-20						
Column from footing top to Floor Level						
C1(230 x 300mm)	Cum	6.00	0.23	0.30	1.65	0.68
Column from Plint Floor Level to Slab						
C1(230 x 300mm)	Cum	6.00	0.23	0.30	3.40	1.41
					Net Qty.	**2.09**
ITEM NO.13						
Providing and fixing in position **Reinforcement of various diameters f**or R.C.C. pile caps, footings, foundations, slabs, beams and columns, canopies, staircases, newels, chajjas, lintels, pardies, coping, fins, arches etc. as per detailed design and drawings and schedules including cutting, bending, hooking the bars, binding with wires or tack welding and supporting as required completed.						
Spec.No.: Bd.F.17, Page No. 306						
S.S.R. Item No.26.33/Page No.161						
A) For Footing as per Item No. 5	Kg	3.710	Cum	67.00	kg/cum	248.57
B) For Lintel & Beam as per I. No. 9	Kg	5.457	Cum	130.00	kg/cum	709.37
C) For R.C.C.for canopy as per I. No. 10	Kg	2.770	Cum	80.00	kg/cum	221.60
D) For R.C.C. Slab & Landing as per I. No. 11	Kg	9.161	Cum	67.00	kg/cum	613.79
E) For R.C.C. Column as per I. No. 12	Kg	2.090	Cum	130.00	kg/cum	271.70
				Net Qty. in Kg		**2065.03**
				Net Qty. in MT		**2.065**

Name Of Work :- Construction of Women's Rest Room (For Ladies Staff) at ……. in Forest Comp. No……. in …… Beat in ……Round in ……. Range of ……Forest Division.

MEASUREMENT SHEET

ITEM OF WORK	Unit	NO	L	B	D/H	QTY.
ITEM NO. 14						
Providing second class Burnt Brick masonry with conventional/ I.S. type bricks in cement mortar 1:6 **in superstructure** including striking joints, raking out joints, watering and scaffolding etc. Complete						
Spec.No. :Bd.G.5 Page No. 315						
S.S.R. Item No.27.05/Page No.167						
B/W Betw. Coln to Coln Vertical Direction	Cum	2.00	2.80	0.23	3.05	3.92
B/W Betw. Coln to Coln Vertical Direction	Cum	2.00	2.37	0.23	3.05	3.33
B/W Betw. Coln to Coln Horizantall Direction	Cum	2.00	4.42	0.23	3.05	6.20
					Total (A)	**13.45**
B) Deduction:-						
Door D1	Cum	1.00	0.90	0.23	2.15	0.45
Window W	Cum	2.00	1.20	0.23	1.20	0.66
Ventilator V1	Cum	1.00	0.60	0.23	0.90	0.12
Ventilator V2	Cum	2.00	0.45	0.23	0.60	0.12
Deduction for Lintel Beams :-						
Lintel Over Door- D	Cum	1.00	1.13	0.230	0.23	0.06
Lintel Over Window- W	Cum	2.00	1.66	0.230	0.23	0.18
Lintel Over Ventilator- V1	Cum	1.00	0.83	0.230	0.23	0.044
Lintel Over Ventilator- V2	Cum	1.00	1.48	0.230	0.23	0.078
Deduction for Beams at sill Level :-						
Sill for Window W	Cum	2.00	1.20	0.28	0.075	0.05
Lintel Over Ventilator- V1	Cum	1.00	0.83	0.230	0.08	0.014
Lintel Over Ventilator- V2	Cum	1.00	1.48	0.230	0.08	0.025
				Total Deduction	**Total(B)**	**1.80**
				Net Qty.	**(A - B)**	**11.64**
ITEM NO. 15						
Providing **second class Burnt Brick masonry** with conventional / I.S. type bricks in cement mortar 1:4 in **half brick thick wall** including mild steel longitudinal reinforcement of 2 bars of 6 mm. diameter/2 hoop iron strips 25 mm x 1.6 mm placed at every third course, properly bent and bounded at ends scaffolding, racking out joints and watering complete.						
Spec.No. :Bd.G.7 Page No. 316						
S.S.R. Item No.27.06/Page No.167						
B/W Common Wall for Hall and Wash Area	Sqmt	1.00	4.42		3.40	15.03
B/W for Wash Area	Sqmt	1.00	2.44		3.40	8.30
B/W for Wash Area	Sqmt	1.00	1.57		2.70	4.24
	Sqmt	1.00	2.92		2.70	7.88
					Total (A)	**35.45**

Name Of Work :- Construction of Women's Rest Room (For Ladies Staff) at …….. in Forest Comp. No……. in …… Beat in ……Round in …….. Range of ……Forest Division.

MEASUREMENT SHEET

ITEM OF WORK	Unit	NO	L	B	D/H	QTY.
B) Deduction:-						
Door D2	Sqmt	3.00	0.75		2.10	4.73
Door OP	Sqmt	1.00	1.20		2.10	2.52
Deduction for Lintel Beams :-						
Lintel Over Door- D2	Cum	3.00	0.98		0.23	0.68
Lintel Over Door- OP	Cum	1.00	1.66		0.15	0.25
				Total Deduction	**Total(B)**	**8.18**
				Net Qty.	**(A - B)**	**27.27**
ITEM NO. 16						
Providing and Laying Ceramic tiles of approved quality required size and thickness **for flooring** in required position laid on a bed of 1:4 cement mortor including cement float,filling joint with white/colour cement slurry cleaning curing etc. complete.						
Sp.No. Bd.M.12 Page No. 385.						
S.S.R. Item No.33.24/Page No.182						
a) Size of Tile - 300 x 300 mm						
For Wash Room	Sqm	1.00	2.44		1.525	3.72
				Net Qty.	**(A)**	**3.72**
ITEM NO. 17						
Providing and laying ceramic tiles of having size 30 cm. x 30 cm. and confirming to corresponding I.S. **for Dado and skirting** in required position with readymade adhesive mortar of approved quality on plaster of 1:2 cement mortar including joint filling with white/ colour cement slurry cleaning curing etc. complete.						
Bd.M.13 Page No. 386.						
S.S.R. Item No.33.25/Page No.182						
For Wash Room L/W	Sqm	2.00	2.44		2.10	10.25
Cross Wall	Sqm	2.00	1.525		2.10	6.41
					Total (A)	**16.66**
Deduction - D2	Sqm	1.00	0.75		2.10	1.58
V2	Sqm	1.00	0.45		0.60	0.27
				Deduction	**Total (B)**	**1.85**
				Net Qty.	**(A-B)**	**14.81**

Name Of Work :- Construction of Women's Rest Room (For Ladies Staff) at …….. in Forest Comp. No……. in …… Beat in ……Round in …….. Range of ……Forest Division.

MEASUREMENT SHEET

ITEM OF WORK		Unit	NO	L	B	D/H	QTY.
ITEM NO. 18							
Providing and laying vitrified rustic matt stone finish tiles For Flooring having size 590 mm to 605 mm x 590 mm to 605 mm of 8 to 10mm thickness and confirming to IS. 15622-2006 (Group Bla) of approved make, shade and pattern for flooring in required position laid ?on a bed of 1:4 cement mortar including neat cement float, filling joints, curing and cleaning etc. complete.							
Spec.No.: Bd.M.12 Page No. 385							
S.S.R. Item No.33.44/Page No.184							
a) 600 mm x 600 mm. size							
Entrance Hall /Waiting Room		Sqm	1.00	4.42		3.05	13.48
Change Room		Sqm	1.00	1.37		1.57	2.15
Change Room		Sqm	1.00	1.32		1.57	2.07
Passage		Sqm	1.00	2.95		0.75	2.21
					Net Qty.	**(A)**	**19.91**
ITEM NO. 19							
Providing and laying vitrified rustic matt stone finish tiles For Skirting having size 590 mm to 605 mm x 590 mm to 605 mm to 8 to 10mm thickness and confirming to IS. 15622-2006 (Group Bla) of approved make, shade and pattern for flooring in required position laid ?on a bed of 1:4 cement mortar including neat cement float, filling joints, curing and cleaning. etc. complete.							
Spec.No.: Bd.M.12 Page No. 385							
S.S.R. Item No.33.45/Page No.184							
a) 600 mm x 600 mm. size							
Entrance Hall /Waiting Room		Sqm	2.00	4.42		0.15	1.33
		Sqm	2.00	3.05		0.15	0.92
Change Room		Sqm	1.00	1.37		0.15	0.21
		Sqm	1.00	1.57		0.15	0.24
Change Room		Sqm	1.00	1.32		0.15	0.20
		Sqm	1.00	1.57		0.15	0.24
Passage		Sqm	2.00	2.95		0.15	0.89
		Sqm	1.00	0.75		0.15	0.11
Deductions for Opening						**Total (A)**	**4.14**
	Door D1	Sqm	1.00	0.90		0.15	0.14
	Door D2	Sqm	4.00	0.75		0.15	0.45
	OP	Sqm	2.00	1.20		0.15	0.36
						Total (B)	**0.95**
					Net Qty.	**(A-B)**	**3.19**

Name Of Work :- Construction of Women's Rest Room (For Ladies Staff) at …….. in Forest Comp. No……. in …… Beat in ……Round in …….. Range of ……Forest Division.

MEASUREMENT SHEET

ITEM OF WORK	Unit	NO	L	B	D/H	QTY.
ITEM NO. 20						
Providing and laying machine cut machine polished machine cut Kota stone slabs 20 to 25 mm thick f**or treads and risers of steps and staircases,** with rounded nosing for the treads on a bed of 1:4 cement mortar including cement float, filling joints with neat cement slurry, curing, polishing and cleaning etc. complete.						
Spec.No.: Bd.M.22 Page No. 390						
S.S.R. Item No.33.18/Page No.1157						
Riser for Entrance Steps 1st Riser	Sqm	1.00	5.10		0.15	0.77
Riser for Entrance Steps 2nd Riser	Sqm	1.00	4.20		0.15	0.63
Riser for Entrance Steps 3rd Riser	Sqm	1.00	3.60		0.15	0.54
Riser for Entrance Steps 4th Riser	Sqm	1.00	2.70		0.15	0.41
Trade for Entrance Steps	Sqm	1.00	5.10		0.30	1.53
	Sqm	1.00	4.20		0.30	1.26
	Sqm	1.00	3.60		0.30	1.08
	Sqm	1.00	2.70		0.30	0.81
					Net Qty.	**7.03**
ITEM.NO.21						
Providing and fixing in position. (as per I.S.1868 / 1982) Aluminium sliding window of two tracks with rectangular pipe having overall dimension 63.50 x 38.10 x 1.02 mm at weight 0.547 kg/Rmt. and window frame bottom track section 61.85 x 31.75 x 1.20 mm at weight 0.695 kg/Rmt. Top and side track section 61.85 x 31.75 x 1.30 mm at weight 0.659 kg/Rmt. The shutter should be of bearing bottom 40 x 18 x 1.25 mm at weight 0.417 kg/Rmt. Inter locking section 40 x 18 x 1.10 mm at weight 0.469 kg/Rmt. And handle section 40 x 18 x 1.25 mm at weight 0.417 kg/Rmt. and top section 40 x 18 x 1.25 mm at weight 0.417 kg/Rmt. As per detailed drawings and as directed by Engineer in charge with all necessary Aluminium sections fixtures and fastenings such as roller bearing in nylon casting and self locking catch fitted in vertical section of shutter including 5 mm thick plain glass with all required screws and nuts etc, complete. With powder coating without box						
Spec.: As directed by Engineer in charge.						
S.S.R. Item No.39.40/Page No.210						
Window W	Sqm	2.00	1.20		1.20	2.88
					Net Qty.	**2.88**

Name Of Work :- Construction of Women's Rest Room (For Ladies Staff) at …….. in Forest Comp. No……. in …… Beat in ……Round in …….. Range of ……Forest Division.

MEASUREMENT SHEET

ITEM OF WORK	Unit	NO	L	B	D/H	QTY.
ITEM.NO.22						
Providing and fixing in position powder coated aluminium louvered windows / ventilator of various sizes with powder coating as per detailed drawing and specifications including aluminium frames 80 x 38 mm x 1.22 mm box type, 5 mm thick sheet glass louvers, of approved quality etc. complete.						
Spec.: As directed by Engineer in charge.						
S.S.R. Item No.39.68/Page No.215						
Ventilator V1	Sqm	1.00	0.60		0.90	0.54
Ventilator V2	Sqm	2.00	0.45		0.60	0.54
					Net Qty.	**0.54**
Item No.23						
Providing and fixing M40 grade thick vibrated pull cast or similar type concrete frame with chamfer conforming to I.S. 65241983 having 6 mm dia. bars 3 Nos. And stirrups @250 mm c/c and fixing in wall with 6 Nos of hold fast of 12 mm dia bars 500 mm long including primer and oil painting etc, complete) frame size 60 mm x 100 mm.						
Spec.: As directed by Engineer in charge.						
S.S.R. Item No.39.56/Page No.214						
D1 -(2.1*2)+0.9 = 5.10	Rmt	1.00		5.10		5.10
D2 -(2.1*2)+0.75 = 4.95	Rmt	3.00		4.95		14.85
					Net Qty.	**19.95**
Item No.24						
Providing and fixing single or double leaf panelled door shutter excluding frame with glazed openable fanlight shutter 35 mm thick as per detailed drawing consistingpanelled vertical styles 100 mm x 35 mm and lock and bottom rail 200 mm x 35 mm and panels 12 mm thick both side commercial ply faced particle board including stainless steel fixtures and fastening and T.W. beading at junctions of panel inserts and as instructed by the Engineer in charge including 3 coats of oil painting etc. complete.						
Spec.No.:As directed by Engineer in charge.						
S.S.R. Item No.39.07/Page No.205						
(b) With Panels of 12 mm thick, Marine Ply						
D1	Sqm	1.00	0.90		2.10	1.89
					Net Qty.	**1.89**

Name Of Work :- Construction of Women's Rest Room (For Ladies Staff) at …….. in Forest Comp. No……. in …… Beat in ……Round in …….. Range of ……Forest Division.

MEASUREMENT SHEET

ITEM OF WORK	Unit	NO	L	B	D/H	QTY.
Item No.25						
Providing and fixing fiber glass reinforced polyster door shutter 30 mm thick as per IS 14856 (2000) (Reaffirmed 2006) without ventilator including chromium plated fixtures and fastening with chromium plated handles on both sides, etc complete						
[Sp No As directed by Engineer incharge.						
S.S.R. Item No.39.58/Page No.214						
D2	Sqm	3.00	0.75		2.10	4.73
					Net Qty.	**4.73**
ITEM NO. 26						
Providing sand faced plaster externally in cement mortar using approved screened sand, in all positions including base coat of 15 mm thick in cement mortar 1:4 using waterproofing compound at 1 kg per cement bag curing the same for not less than 2 days and keeping the surface of the base coat rough to receive the sand faced treatment 6 to 8 mm thick in cement mortar 1:4 finishing the surface by taking out grains and curing for fourteen days scaffolding etc.complete.						
Bd.L.7 Page No. 369						
S.S.R. Item No.32.11/Page No.177						
Front & Rear Side Wall	Sqm	2.00	4.88		4.00	39.04
Right & Left Side Wall	Sqm	2.00	6.065		4.00	48.52
					(A)	**87.56**
Deduction						
Door D1	Sqm	1.00	0.90		2.10	1.89
W	Sqm	2.00	1.20		1.20	2.88
V	Sqm	3.00	0.60		0.90	1.62
				Deduction	**(B)**	**6.39**
				Net Qty.	**(A-B)**	**81.17**
ITEM NO.27						
Providing **internal cement plaster 12mm. thick in single coat in cement mortar 1:4 with out Neeru Finish** to concrete or brick surfaces,in all positions including scaffolding & curing etc. complete.						
Bd. L.2 Page No. 368						
S.S.R. Item No.32.04 /Page No.177						
(A) Inner Surface						
Entrance Hall / Waiting L/W	Sqm	2.00	4.42		3.40	30.06
Entrance Hall / Waiting C/W	Sqm	2.00	3.05		3.40	20.74
Wash Room Room L/W	Sqm	2.00	2.44		3.40	16.59
Wash Room Room C/W	Sqm	2.00	1.525		3.40	10.37
Change Room L/W	Sqm	2.00	1.37		2.70	7.40

Name Of Work :- Construction of Women's Rest Room (For Ladies Staff) at ……. in Forest Comp. No……. in …… Beat in ……Round in ……. Range of ……Forest Division.

MEASUREMENT SHEET

ITEM OF WORK	Unit	NO	L	B	D/H	QTY.
Change Room C/W	Sqm	2.00	1.57		2.70	8.48
Change Room L/W	Sqm	2.00	1.32		2.70	7.13
Change Room C/W	Sqm	2.00	1.57		3.40	10.68
Passage Area L/W	Sqm	1.00	2.95		2.70	7.97
	Sqm	1.00	2.95		2.70	7.97
Passage Area L/W	Sqm	2.00	0.75		3.40	5.10
					Total (A)	**132.49**
Deduction						
Door D1	Sqm	1.00	0.90		2.10	1.89
Door D2	Sqm	3.00	0.75		2.10	4.73
Opening - OP	Sqm	1.00	1.20		2.10	2.52
Window-W	Sqm	2.00	1.20		1.20	2.88
Ventilator - V1	Sqm	1.00	0.60		0.90	0.54
Ventilator - V2	Sqm	2.00	0.45		0.60	0.54
					Total (B)	**13.10**
				Net Qty	**(A-B)**	**119.39**

ITEM NO.28

Providing **internal cement plaster 12mm. thick in single coat in cement mortar 1:4 with out Neeru Finish** to concrete or brick surfaces,in all positions including scaffolding & curing etc. complete.

Bd. L.2 Page No. 368
S.S.R. Item No.32.04 /Page No.177
Septic Tank

Inside Partition for Septic Tank L/W	Sqm	2.00	1.71		1.35	4.62
Inside Partition for Septic Tank C/W	Sqm	2.00	0.80		1.35	2.16
Pillar for Ventilator Pipe	Sqm	4.00	0.35		0.45	0.63
					Total Qty.	**7.41**

ITEM NO.29

Providing **internal cement plaster 6mm. thick in a single coat in cement mortar 1:4 with out Neeru finish** to concrete surface in all positions, including scaff ing and curing etc. complete.

Spec. No. Bd.L.1 Page No. 367
S.S.R. Item No.32.02 /Page No.177
CEILLING PLASTER

For Hall	Sqm	1.00	3.05		4.42	13.48
Wash Room	Sqm	1.00	2.44		1.525	3.72
Change Room	Sqm	1.00	1.37		1.57	2.15
Change Room	Sqm	1.00	1.32		1.57	2.07
Lobby/ Passage Area	Sqm	1.00	2.95		0.75	2.21

Name Of Work :- Construction of Women's Rest Room (For Ladies Staff) at ……. in Forest Comp. No……. in …… Beat in ……Round in …….. Range of ……Forest Division.

MEASUREMENT SHEET

ITEM OF WORK	Unit	NO	L	B	D/H	QTY.
Front Side Projected Slab & Parapet Wall Outer Face (front Side)	Sqm	1.00	6.10		2.00	12.20
Back Side Parapet Wall	Sqm	1.00	6.10		0.80	4.88
Right Side Projected Slab & Parapet Wall Outer Face (front Side)	Sqm	1.00	7.29		2.00	14.57
Left Side Parapet Wall	Sqm	1.00	7.29		0.80	5.83
Front & Back Side Inner Side of Parapet Wall	Sqm	2.00	6.10		0.70	8.54
Right & Left & Back Side Inner Side of Parapet Wall	Sqm	2.00	7.29		0.70	10.20
					Net Qty	**79.85**
ITEM NO. 30						
Providing and fixing European type wall-hung white water closet of approved make with push valve concealed type with cover plate 32mm size of approved make including soil pipe,vent pipe up to out side face of wall,100mm dia.G.I. plug bend in let pipe all fittings, cutting and making good walls,floors etc. complete.						
As directed by Engineer incharge.						
S.S.R. Item No.42.86/Page No.207						
Wall-hung white water closet	No	1.00				1.00
					Net Qty.	**1.00**
Item No. 31						
Providing and fixing 10 cm PVC nahani trap with grating etc. complete.						
Bd.V.32 Page No.567						
S.S.R. Item No.42.67/Page No.205						
For WC Room	No	1.00				1.00
					Net Qty.	**1.00**
ITEM NO. 32						
Providing and fixing H.D.P container Syntex or alike one piece moulded water tank made out of high density polythyler and built corrugated inclusive of delivery up to destination hoisting and fixing of accessories such as inlet,outlet overflow pipe inclusive of all tanks capacity between 200 to 1000 liters						
As directed by Engineer incharge.						
S.S.R. Item No.42.53/Page No.204						
Water Tank	Ltrs	1.00	1000.00			1000.00
					Net Qty.	**1000.00**
Item No. 33						
Providing & Constructing Brick masonry base for bolding P.V.C. Water Storage tank in Position.						
Masonary Platform Job work	LS	1.00				**1.00**

Name Of Work :- Construction of Women's Rest Room (For Ladies Staff) at …….. in Forest Comp. No……. in …… Beat in ……Round in …….. Range of ……Forest Division.

MEASUREMENT SHEET

ITEM OF WORK	Unit	NO	L	B	D/H	QTY.
ITEM NO.34						
Providing and constructing Brick Masonry Inspection Chamber 60cm x 45cm x 90cm including 1:4:8 cement concrete foundation 1:2:4 cement concrete channels half round G.S.W. pipes, Brick Masonry, plastering from inside and with frame fixed in cement concrete with R.C.C. Cover medium duty 140 kg with frame etc complete.						
Spec.No.Bd.V.43, Page No. 574						
S.S.R. Item No.42.12/Page No.229						
Inspection Chamber	No	3.00	1.00			3.00
					Net Qty.	**3.00**
ITEM. NO. 35						
Providing and fixing on walls/ ceiling/ floor Required dia. CPVC pipe with necessary fittings, remaking good the demolished portion etc. complete. Including removing existing pipe line if necessary and conveying and stacking the same in PWD chowky or as directed etc. complete.						
BD.V 5 page 551 and as directed by Engineer in charge						
S.S.R. Item No.42.55,56,57 /Page No.234						
15 mm dia Internal connection	Rmt		10.00			10.00
					Net Qty.	**10.00**
20 mm dia Internal connection	Rmt		10.00			10.00
					Net Qty.	**10.00**
25mm dia External connection	Rmt		10.00			10.00
					Net Qty.	**10.00**
ITEM NO. 36						
Providing and fixing **screw down required Dia. wheeled stop tap of brass** including necessary sockets /union nut testing etc. complete. **(prior approvd of sample & brand by Ex. Engineer before use)**						
[Spec.No. :Bd.V.9 Page No.555]						
S.S.R. Item No.41.43,44,45 /Page No.225						
15 mm dia	No	1.00				1.00
					Net Qty.	**1.00**
20 mm dia	No	1.00				1.00
					Net Qty.	**1.00**
25 mm dia	No	1.00				1.00
					Net Qty.	**1.00**

Name Of Work :- Construction of Women's Rest Room (For Ladies Staff) at …….. in Forest Comp. No……. in …… Beat in ……Round in …….. Range of ……Forest Division.

MEASUREMENT SHEET

ITEM OF WORK	Unit	NO	L	B	D/H	QTY.
ITEM NO. 37						
Providing and fixing 15 mm dia. screw down bib/ stop tap of brass including necessary socket union nut complete.						
Bd.V.8 Page No. 554						
S.S.R. Item No.41.40/Page No.225						
15 mm dia	No	2.00				2.00
					Net Qty.	**2.00**
ITEM NO. 38						
Providing soak pit of size 120cm x 120cm x 120cm including excav ating and filling with brick-bats.						
Bd.V.46, Page No. 576						
S.S.R. Item No.42.19/Page No.230						
For WC Soak Pit	No	1.00	1.00			1.00
					Net Qty.	**1.00**
ITEM NO. 39						
Providing and fixing **fittings and accessories** such as ball cock, over flow pipe with mosquito proof coupling, scour pipe with plug, manhole with cover and locking arrangement, connecting pipes and embedding intake and outflow pipes into the R.C.C. water reservoir.						
[Spec.No. :Bd.V.18 Page No.558]						
Job Work	LS	1.00				**1.00**
ITEM NO. 40						
Providing and applying two coats of exterior weather shield paint of approved manufacture and of approved colour to the plastered surfaces including cleaning ,preparing the plaster surface ,applying primer coat ,scaffolding if necessary, and watering the surface for two days etc complete. NOTE: For Item No. 15 to 18 prior approval of Superintending Engineer will be necessary						
As directed by Engineer incharge.						
S.S.R. Item No.35.26/Page No.190						
Quantity as per Item No. 27	Sqm					81.17
Quantity as per Item No. 29	Sqm					7.41
					Net Qty.	**88.58**
ITEM NO. 41						
Providing and applying putty to new plastered surfaces in two coats to receive approved paint in all positions including all materials ,labour scaffolding and curing etc. complete.						
Spec.: As directed by Engineer- in-charge						
S.S.R. Item No.32.34/Page No.179						
Quantity as per Item No. 28	Sqm					119.39
Quantity as per Item No. 30	Sqm					79.85

Name Of Work :- Construction of Women's Rest Room (For Ladies Staff) at …….. in Forest Comp. No……. in …… Beat in ……Round in …….. Range of ……Forest Division.

MEASUREMENT SHEET

ITEM OF WORK	Unit	NO	L	B	D/H	QTY.
					Net Qty.	**199.24**
ITEM NO.42						
Providing and applying plastic emulsion paint of approved quality, colour and shade to old and new surfaces in two coats including scaffolding, preparing the surface. (excluding the primer coat)etc. complete.						
Spec.No.: Bd.P.6/Page No.414						
S.S.R. Item No.36.12/Page No.192						
Quantity as per Item No. 40	Sqm					199.24
					Net Qty.	**199.24**
Item No. 43						
Providing and fixing mild steel grill work for windows, ventilators etc. 20 kg/sqm as per drawing including fixtures, necessary welding and painting with one coats of anticorrosive paint and two coats of oil painting complete.						
Spec.No.: Bd.U.1 Page No. 537						
S.S.R. Item No. 40.01/Page No.220						
b) --------- do ---------- 20 Kg/Sqm.						
Window-W	Sqm	2.00	1.20		1.20	2.88
Ventilator V	Sqm	3.00	0.60		0.90	1.62
					Net Qty.	**4.50**
ITEM NO. 44						
Providing and laying cement concrete flooring 50 mm thick with M15 cement concrete laid to proper level and slope in alternate bays including compaction filling joints, marking lines to give the appearance of tiles of 30cm x 30cm or other size laid diagonally/ square etc finishing smooth (with extra cement) in any colour as directed and curing etc. complete. With Natural Sand						
Spec.No.: Bd.M.7 Page No. 383						
S.S.R. Item No. 33.13/Page No.181						
Septic Tank I.P.S. Flooring	Sqmt	1.00	1.71		0.80	1.37
					Net Qty.	**1.37**
ITEM NO.45						
Providing and fixing **U.P.V.C.Soil /Vent/ Waste SWR Pipe** of required diameter conforming to I.S.13592 & IS.4985 with stand continous internal hydrooulic pressure of 4kg./cm.sq.including fixtures and fittings such as bend,tees,single junction,double junction joining with rubber ringes & lubricants on wall by means of clipes or in ground including						
[Sp No As directed by Engineer incharge.						
S.S.R. Item No. 42.27,28/Page No.231						
a) 75 mm Dia						
Vent Pipe	Rmt.	1.00	3.00			3.00
					Net Qty.	**3.00**

Name Of Work :- Construction of Women's Rest Room (For Ladies Staff) at …….. in Forest Comp. No……. in …… Beat in ……Round in …….. Range of ……Forest Division.

MEASUREMENT SHEET

ITEM OF WORK	Unit	NO	L	B	D/H	QTY.
b) 110 mm Dia						
For Septic Tank	Rmt.	1.00	5.00			5.00
For Rainwater Pipe	Rmt.	1.00	5.00			5.00
					Net Qty.	**10.00**
ITEM NO.46						
Providing and fixing reinforced cement concrete cover of size 60 cm x 45 cm with frame over inspection chamber etc. complete. Heavy duty (160 kg)						
Sp No As directed by Engineer incharge.						
S.S.R. Item No. 42.70/Page No.235						
Manhole Cover	No	1.00	2.00			2.00
					Net Qty.	**2.00**
ITEM NO. 47						
Providing and fixing coloured glazed earthenware Wash Hand Basin of 45 cm x 30 cm size including cold water pillar tap/cold and hot water pillar tap brackets, rubber plugs and brass chain, stop tap and necessary pipe connection including P.V.C. waste pipe and trap up to the outside face of the wall. Making good the damaged surface, testing etc. complete.						
[Spec.No: Bd.V.30 Page No. 565						
S.S.R. Item No.41.67/Page No.227						
A) 45mm to 30mm Wash Basin	No	1.00	1.00			1.00
a)With cold water piller tap					**Net Qty.**	**1.00**
ITEM. NO 48						
Providing and fixing 15cm x 10cm salt glazed stoneware gully trap in cement concrete 1:4:8 outside the building including cast iron grating in the sink, connecting glazed stoneware pipe, brick masonry chamber with cast iron lid and cast iron grating for the gully trap.						
Spec.No.: Bd.V.38/Page No.572						
S.S.R. Item No.42.02/Page No.229						
WC Room	No	1.00	2.00			2.00
					Net Qty.	**2.00**
ITEM. NO 59						
Providing and applying water proofing treatment using acrylic polymer modified cement based water proofing coating with fibre glass mesh mixing at the rate of powder to liquid (2:1) by weight covering 9 to 10 sqm /kg with two coat using Dr. Fixit or alike of chemicals for masonry and concrete surface by brush covering 07 years guarantee on Stamp Papers etc. complete						
Spec.No.: As directed by Engineer in charge						
S.S.R. Item No.31.09/Page No.175						
For Terrance	Sqmt	1.00	6.10		7.29	44.44
					Net Qty.	**44.44**

Name Of Work :- Construction of Women's Rest Room (For Ladies Staff) at …….. in Forest Comp. No……. in …… Beat in ……Round in …….. Range of ……Forest Division.

MEASUREMENT SHEET

ITEM OF WORK	Unit	NO	L	B	D/H	QTY.
ITEM. NO 50						
Providing **water proofing in W.C. and bath** including Brick Bat Coba in all position consisting of specialised approved waterproofing compound and materials as per manufacturers specifications and covering 10 years guarantee on court fee stamp paper of Rs.100/- including all lead, lift and ponding test etc. complete.						
Spec.No.:As directed by Engineer incharge.						
S.S.R. Item No.31.05/Page No.150						
For Wash Room	Cum	1.00	2.44	1.53	0.25	0.93
					Net Qty.	**0.93**
Item No.51						
Providing and fixing mild steel grill railing 20 kg/sq.m with teak wood hand rail of size 75mm x 60 mm.and sill of 75mm.x 25 mm.and newel posts for staircases, including fabricating, fix-tures, erecting, painting the grill work with one coat of anti-corrosive paint and two coats of oil painting with approved colour and polishing the sill, hand rail and the newel post with french polish.						
Spec.No.: Bd.U.2 Page No. 537						
S.S.R. Item No. 40.03/Page No.220						
b) --------- do ---------- 20 Kg/Sqm.						
For Front Side Railling for Balcony	Sqmt	1.00	4.00		0.45	1.80
For Right Side Railling	Sqmt	1.00	8.49		0.45	3.82
					Net Qty.	**5.62**
ITEM. NO 52						
Providing and fabricating **structural steel work** in rolled sections like joists, channels, angles, tees etc. as per detailed design and drawings or as directed including cutting, fabricating, hoisting, erecting, fixing in position making riveted / bolted / welded connections without connecting plates, braces etc. and including one coat of						
Spec. No. : Bd.C. 2/Page No. 275						
S.S.R. Item No. 23.02/Page No.148						
For MS Ladder						
Verticla Angle(75 x75 x 6mm)	Rmt.	2.00	4.60			9.20
			weight per mtr -6.80kg/mt			62.56
Brecing angle(300mm C/C) 35 x 35 x 5 mm	Rmt.	16.00	0.60			9.60
			weight per mtr -2.60kg/mt			24.96
					Total Wt.in Kg	87.52
					Total Wt.in MT	**0.088**

RFO **ACF**

Name Of Work :- Construction of Women's Rest Room (For Ladies Staff) at …….. in Forest Comp. No……. in …… Beat in ……Round in …….. Range of ……Forest Division.

Lead Statement

Sr.No	Material	Name of Quary	Lead in KM	Rate	Unit
1	Metal 6mm to 40mm		05 KM	229.63	Cu.M
2	Stone /Metal 80mm		05 KM	220.06	Cu.M
3	Sand		05 KM	229.63	Cu.M
4	Murum		05 KM	220.06	Cu.M
5	Bricks		5 KM	479.26	Per 1000 Nos
				0.48	Per Nos
6	Steel		05 KM	148.81	M.T.
7	Cement		05 KM	148.81	M.T.
				7.44	Per Bag
8	Flooring Tile		05 KM	14.88	Sq.M
9	Rubble		05 KM	280.93	Cu.M

TRIAL PIT

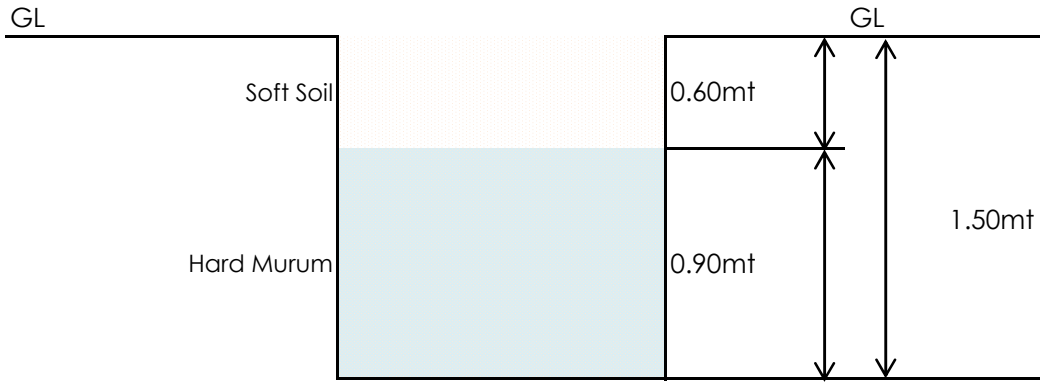

RFO

ACF

Rate Analysis -2021-22

Name Of Work :- Construction of Women's Rest Room (For Ladies Staff) at …….. in Forest Comp. No……. in …… Beat in ……Round in …….. Range of ……Forest Division.

Sr. No.	Item No.	Reference No.	Description of the item	Additional Specification	Unit	(After Deduction of SCADA Rs 120/Cum Completed Rate In Rs.	Deduct1% Labour cess + labour amenities and all other overhead charges, 10%=11%	Sub Total	Add 10% for Tribal & 20 % for Naxalite affected area =30%	ADD CARTING OF MATERIAL AS PER LATEST RATE							Add 1% Labour cess + labour amenities and all other overhead charges, 10%=11%	Gross Total	Final Rate Adopted
										Buld.			Rd						
										40mm & Below	05 KM	229.63							
										Bricks	5 KM	0.48							
										80mm & above	05 KM	220.06							
										Sand	05 KM	229.63							
										Murum	05 KM	220.06							
										Cement	05 KM	7.44							
										Steel	05 KM	148.81							
										Tiles	05 KM	14.88							
										R. Stone	05 KM	280.93							
										Qty	Amt	Qty	Amt.	Qty	Amt	Total Trnsprtation charges			
1	21.34	BDW	Removing grass, gazer grass and disposing off out of building premises	As directed by Engineer in charge.	Sqmt	6.00	0.66	5.34	0.00							0.00	0.66	6.00	**6.00**
2	21.02	BDA 1	Excavation for foundation in earth, soil of all types, sand, gravel and soft murum,. (Lift upto 1.5 m.)	Bd.A.1 Page No. 259	Cum	193.00	21.23	171.77	0.00							0.00	21.23	193.00	**193.00**
3	21.06	BDA 2	Excavation for foundation in in Hard murum,(Lift upto 1.5 m.)	Bd.A.2 Page No. 259	Cum	212.00	23.32	188.68	0.00							0.00	23.32	212.00	**212.00**
4	24.01	BDE 1	Providing and laying Cast in situ/Ready Mix cement concrete in M-10 for foundation and bedding	Bd. E. 1 Page No. 287	Cum	5418.00	595.98	4822.02	0.00	**0.470**	107.93	**0.94**	215.85	**4.40**	32.74	356.52	595.98	5774.52	**5774.50**
5	25.11	BDF 3	Providing and laying Cast in situ/Ready Mix cement concrete M-20 for R.C.C. work in foundations	Bd.F.3 Page No. 298 and B.7, Page No.38	Cum	6546.00	720.06	5825.94	0.00	**0.425**	97.59	**0.85**	195.19	**7.00**	52.08	344.86	720.06	6890.86	**6890.85**
6	27.01	BDG 1	Providing second class Burnt Brick masonry in CM 1:6 in foundations and plinth	Bd.G. 1 Page No. 313	Cum	7343.00	807.73	6535.27	0.00	**0.320**	73.48	**475.00**	228.00	**1.58**	11.76	313.24	807.73	7656.24	**7656.25**
7	21.37	BDA 11	Filling in plinth and floors with contractors material /brought from outside	Bd.A.11 Page No. 263	Cum	550.00	60.50	489.50	0.00	**1.150**	253.07	**0.00**	0.00			253.07	60.50	803.07	**803.05**
8	21.40	BDA	Providing soling using 80 mm size trap metal in 15 cm. layer	As directed by Engineer in charge.	Cum	1322.00	145.42	1176.58	0.00	**0.330**	75.78	**1.00**	280.93			356.71	145.42	1678.71	**1678.70**

Name Of Work :- Construction of Women's Rest Room (For Ladies Staff) at …….. in Forest Comp. No…… in …… Beat in ……Round in …….. Range of ……Forest Division.

Sr. No.	Item No.	Reference No.	Description of the item	Additional Specification	Unit	(After Deduction of SCADA Rs 120/Cum Completed Rate In Rs.	Deduct1% Labour cess + labour amenities and all other overhead charges, 10%=11%	Sub Total	Add 10% for Tribal & 20 % for Naxalite affected area =30%	ADD CARTING OF MATERIAL AS PER LATEST RATE							Add 1% Labour cess + labour amenities and all other overhead charges, 10%=11%	Gross Total	Final Rate Adopted
										Buld.			Rd			Total Trnsprtation charges			
										40mm & Below	05 KM	229.63							
										Bricks	5 KM	0.48							
										80mm & above	05 KM	220.06							
										Sand	05 KM	229.63							
										Murum	05 KM	220.06							
										Cement	05 KM	7.44							
										Steel	05 KM	148.81							
										Tiles	05 KM	14.88							
										R. Stone	05 KM	280.93							
										Qty	Amt	Qty	Amt.	Qty	Amt				
9	25.50	BDF 6	Providing and laying Cast in situ/Ready Mix cement concrete M-20 for R.C.C. beams and lintels	Bd.F.6 Page No. 300	Cum	11363.00	1249.93	10113.07	0.00	0.425	97.59	0.85	195.19	7.00	52.08	344.86	1249.93	11707.86	**11707.85**
10	26.17	BDF 11	Providing and laying Cast in situ cement concrete in M-20 for R.C.C. pardi	Bd.F.11/Page No.304	Cum	14572.00	1602.92	12969.08	0.00	0.425	97.59	0.85	195.19	7.00	52.08	344.86	1602.92	14916.86	**14916.85**
11	25.70	BDF 8	Providing and laying Cast in situ/Ready Mix cement concrete M-20 for R.C.C. slabs and landings	Bd.F.8 Page No. 302	Cum	13823.00	1520.53	12302.47	0.00	0.425	97.59	0.85	195.19	7.00	52.08	344.86	1520.53	14167.86	**14167.85**
12	25.31	BDF 5	Providing and laying Cast in situ/Ready Mix cement concrete M-20 for R.C.C. columns	Bd.F.5 Page No. 300	Cum	12867.00	1415.37	11451.63	0.00	0.425	97.59	0.85	195.19	7.00	52.08	344.86	1415.37	13211.86	**13211.85**
13	26.33	BDF 17	Providing and fixing in position TMT - FE - 500 bar reinforcement of various diameters for R.C.C.	Bd.F.17, Page No. 306	MT	71778.00	7895.58	63882.42	0.00	0.000	0.00	0.00	0.00	1.00	148.81	148.81	7895.58	71926.81	**71926.80**
14	27.05	BDG 5	Providing second class Burnt Brick masonry CM 1:6 in superstructure	Bd.G.5 Page No. 315	Cum	7570.00	832.70	6737.30	0.00	0.320	73.48	475.00	228.00	1.58	11.76	313.24	832.70	7883.24	**7883.25**
15	27.06	BDG 7	Providing second class Burnt Brick masonry CM 1:4 in half brick thick wall	Bd.G.7 Page No. 316	Sqmt	1023.00	112.53	910.47	0.00	0.034	7.81	57.000	27.36	0.23	1.67	36.84	112.53	1059.84	**1059.85**
16	33.24	BDM 12	Providing and laying ceramic tiles of having size 30 cm x 30 cm for flooring	Bd.M.12 Page No. 385.	Sqmt	1157.00	127.27	1029.73	0.00	0.017	3.90	0.00	0.00	0.20	1.49	5.39	127.27	1162.39	**1162.40**
17	33.25	BDM 13	Providing and laying ceramic tiles of having size 30 cm. x 30 cm. for dado and skirting	Bd.M.13 Page No. 386.	Sqmt	1226.00	134.86	1091.14	0.00	0.017	3.90	0.00	0.00	0.20	1.49	5.39	134.86	1231.39	**1231.40**
18	33.44	BDM 12	Providing and laying vitrified rustic matt stone finish tiles a) Flooring	Bd.M.12 Page No. 385	Sqmt	1743.00	191.73	1551.27	0.00	0.020	4.59	0.00	0.00	0.20	1.49	6.08	191.73	1749.08	**1749.10**

Name Of Work :- Construction of Women's Rest Room (For Ladies Staff) at …….. in Forest Comp. No…….. in …….. Beat in ……Round in …….. Range of ……Forest Division.

Sr. No.	Item No.	Reference No.	Description of the item	Additional Specification	Unit	(After Deduction of SCADA Rs 120/Cum Completed Rate In Rs.	Deduct1% Labour cess + labour amenities and all other overhead charges, 10%=11%	Sub Total	Add 10% for Tribal & 20 % for Naxalite affected area =30%	ADD CARTING OF MATERIAL AS PER LATEST RATE							Add 1% Labour cess + labour amenities and all other overhead charges, 10%=11%	Gross Total	Final Rate Adopted
										Buld.			Rd						
										40mm & Below	05 KM	229.63				Total Trnsprtation charges			
										Bricks	5 KM	0.48							
										80mm & above	05 KM	220.06							
										Sand	05 KM	229.63							
										Murum	05 KM	220.06							
										Cement	05 KM	7.44							
										Steel	05 KM	148.81							
										Tiles	05 KM	14.88							
										R. Stone	05 KM	280.93							
										Qty	Amt	Qty	Amt.	Qty	Amt				
19	33.45	BDM 12	Providing and laying vitrified rustic matt stone finish tiles b) Skirting	Bd.M.12 Page No. 385	Sqmt	1814.00	199.54	1614.46	0.00	0.020	4.59	0.00	0.00	0.20	1.49	6.08	199.54	1820.08	**1820.10**
20	33.18	BDM 22B	Providing and laying machine cut machine polished machine cut Kota stone slabs 20 to 25 mm thick	Bd.M.22 Page No. 390	Sqmt	1493.00	164.23	1328.77	0.00	0.022	5.05	0.00	0.00	0.185	1.38	6.43	164.23	1499.43	**1499.45**
21	39.40	BDT	Providing and fixing in position. (as per I.S.1868 / 1982) Aluminium sliding window of two tracks	As directed by Engineer in charge.	Sqmt	4769.00	524.59	4244.41	0.00								524.59	4769.00	**4769.00**
22	39.68	BDT	Providing and fixing in position powder coated aluminium louvered windows / ventilator	As directed by Engineer in charge.	Sqmt	3107.00	341.77	2765.23	0.00								341.77	3107.00	**3107.00**
23	39.56	BDT	Providing and fixing M40 grade thick vibrated pull cast or similar type concrete frame with chamfer	As directed by Engineer in charge.	Rmt	899.00	98.89	800.11	0.00								98.89	899.00	**899.00**
24	39.07	BDT-11	Providing and fixing single or double leaf panelled door shutter	As directed by Engineer in charge.	Sqmt	6723.00	739.53	5983.47	0.00								739.53	6723.00	**6723.00**
25	39.58	BDT	Providing and fixing fiber glass reinforced polyster door shutter 30 mm thick as per IS 14856 (2000)	As directed by Engineer in charge.	Sqmt	2990.00	328.90	2661.10	0.00								328.90	2990.00	**2990.00**
26	32.11	BDL 7	Providing sand faced plaster externally in cement mortar using approved screened sand	Bd.L.7 Page No. 369	Sqmt	599.00	65.89	533.11	0.00	0.033	7.58	0.00	0.00	0.25	1.86	9.44	65.89	608.44	**608.45**

Name Of Work :- Construction of Women's Rest Room (For Ladies Staff) at …….. in Forest Comp. No…….. in …….. Beat in ……Round in …….. Range of ……Forest Division.

Sr. No.	Item No.	Reference No.	Description of the item	Additional Specification	Unit	(After Deduction of SCADA Rs 120/Cum Completed Rate In Rs.	Deduct1% Labour cess + labour amenities and all other overhead charges, 10%=11%	Sub Total	Add 10% for Tribal & 20 % for Naxalite affected area =30%	ADD CARTING OF MATERIAL AS PER LATEST RATE							Add 1% Labour cess + labour amenities and all other overhead charges, 10%=11%	Gross Total	Final Rate Adopted
										Buld.			Rd						
										40mm & Below	05 KM	229.63				Total Trnsprtation charges			
										Bricks	5 KM	0.48							
										80mm & above	05 KM	220.06							
										Sand	05 KM	229.63							
										Murum	05 KM	220.06							
										Cement	05 KM	7.44							
										Steel	05 KM	148.81							
										Tiles	05 KM	14.88							
										R. Stone	05 KM	280.93							
										Qty	Amt	Qty	Amt.	Qty	Amt				
27	32.04	BDL 2A	Providing internal cement plaster 12mm thick in single coat in cement mortar 1:4 without neeru finish	Bd. L.2 Page No. 368	Sqmt	264.00	29.04	234.96	0.00	0.015	3.44	0.00	0.00	0.11	0.82	4.26	29.04	268.26	**268.25**
28	32.04	BDL 2A	Providing internal cement plaster 12mm thick in single coat in cement mortar 1:4 without neeru finish	Bd. L.2 Page No. 368	Sqmt	264.00	29.04	234.96	0.00	0.015	3.44	0.00	0.00	0.11	0.82	4.26	29.04	268.26	**268.25**
29	32.02	BDL 1	Providing internal cement plaster 6 mm thick in a single coat in cement mortar 1:3 without neeru finish	Bd.L.1 Page No. 367	Sqmt	197.00	21.67	175.33	0.00	0.007	1.61	0.00	0.00	0.07	0.52	2.13	21.67	199.13	**199.15**
30	42.86	BDV	Providing and fixing European type wall-hung white water closet of approved make	As directed by Engineer in charge.	Nos	12391.00	1363.01	11027.99	0.00								1363.01	12391.00	**12391.00**
31	42.67	BDV 32	Providing and fixing 10 cm PVC nahani trap with grating etc. complete.	Bd.V.32 Page No.567	Nos	496.00	54.56	441.44	0.00								54.56	496.00	**496.00**
32	42.53	BDV	Providing and fixing H.D.P container Syntex or alike one piece moulded water tank	As directed by engineer-in-charge.	Litre	13.00	1.43	11.57	0.00								1.43	13.00	**13.00**
33			Providing & Constructing Brick masonry base for holding Water tank	As directed by engineer-in-charge.	LS	1500.00	165.00	1335.00	0.00								165.00	1500.00	**1500.00**
34	42.12	BDV 43	Providing and constructing Brick Masonry Inspection Chamber 60cm x 45cm x 90cm	Bd.V.43, Page No. 574	Nos	7818.00	859.98	6958.02	0.00								859.98	7818.00	**7818.00**

Name Of Work :- Construction of Women's Rest Room (For Ladies Staff) at …….. in Forest Comp. No……. in ……. Beat in ……Round in …….. Range of ……Forest Division.

Sr. No.	Item No.	Reference No.	Description of the item	Additional Specification	Unit	(After Deduction of SCADA Rs 120/Cum Completed Rate In Rs.	Deduct1% Labour cess + labour amenities and all other overhead charges, 10%=11%	Sub Total	Add 10% for Tribal & 20 % for Naxalite affected area =30%	ADD CARTING OF MATERIAL AS PER LATEST RATE							Add 1% Labour cess + labour amenities and all other overhead charges, 10%=11%	Gross Total	Final Rate Adopted
										Buld.			Rd						
										40mm & Below	05 KM	229.63				Total Trnsprtation charges			
										Bricks	5 KM	0.48							
										80mm & above	05 KM	220.06							
										Sand	05 KM	229.63							
										Murum	05 KM	220.06							
										Cement	05 KM	7.44							
										Steel	05 KM	148.81							
										Tiles	05 KM	14.88							
										R. Stone	05 KM	280.93							
										Qty	Amt	Qty	Amt.	Qty	Amt				
35	42.55	BDV	Providing and fixing on walls CPVC pipe 15 mm dia.	BD.V 5 page 551	Rmt	246.00	27.06	218.94	0.00								27.06	246.00	**246.00**
	42.56	BDV 5	Providing and fixing on walls CPVC pipe 20 mm dia.	BD.V 5 page 551	Rmt	285.00	31.35	253.65	0.00								31.35	285.00	**285.00**
	42.57	BDV 5	Providing and fixing on walls CPVC pipe 25 mm dia.	BD.V 5 page 551	Rmt	336.00	36.96	299.04	0.00								36.96	336.00	**336.00**
36	41.43	BDV 8	Providing and fixing screw down 15 mm dia. wheeled stop tap of brass	Bd.V.9 Page No. 555	Rmt	468.00	51.48	416.52	0.00								51.48	468.00	**468.00**
	41.44	BDV 9	Providing and fixing 20 mm dia. screw down bib/ stop tap of brass	Bd.V.9 Page No. 555	Rmt	605.00	66.55	538.45	0.00								66.55	605.00	**605.00**
	41.45	BDV 9	Providing and fixing screw down for 25mm dia. wheeled stop tap of brass	Bd.V.9 Page No. 555	Rmt	785.00	86.35	698.65	0.00								86.35	785.00	**785.00**
37	41.40	BDV 8	Providing and fixing 15 mm dia. screw down bib/ stop tap of brass	Bd.V.8 Page No. 554	Nos	637.00	70.07	566.93	0.00								70.07	637.00	**637.00**
38	42.19	BDV 46	Providing soak pit of size 120cm x 120cm x 120cm	Bd.V.46, Page No. 576	Nos	2683.00	295.13	2387.87	0.00								295.13	2683.00	**2683.00**
39			Providing and fixing fittings and accessories such as ball cock, over flow pipe	As directed by engineer-in-charge.	LS	1500.00	165.00	1335.00	0.00								165.00	1500.00	**1500.00**
40	35.26	BDO	Providing and applying two coats of exterior weather shield paint	As directed by Engineer in charge.	Sqmt	238.00	26.18	211.82	0.00								26.18	238.00	**238.00**
41	32.34		Providing and applying putty to new plastered surfaces in two coats to receive approved paint	As directed by Engineer in charge.	Sqmt	87.00	9.57	77.43	0.00								9.57	87.00	**87.00**

Name Of Work :- Construction of Women's Rest Room (For Ladies Staff) at …….. in Forest Comp. No…… in …… Beat in ……Round in …….. Range of ……Forest Division.

Sr. No.	Item No.	Reference No.	Description of the item	Additional Specification	Unit	(After Deduction of SCADA Rs 120/Cum Completed Rate In Rs.	Deduct1% Labour cess + labour amenities and all other overhead charges, 10%=11%	Sub Total	Add 10% for Tribal & 20 % for Naxalite affected area =30%	ADD CARTING OF MATERIAL AS PER LATEST RATE							Add 1% Labour cess + labour amenities and all other overhead charges, 10%=11%	Gross Total	Final Rate Adopted
										Buld.			Rd						
										40mm & Below	05 KM	229.63				Total Trnsprtation charges			
										Bricks	5 KM	0.48							
										80mm & above	05 KM	220.06							
										Sand	05 KM	229.63							
										Murum	05 KM	220.06							
										Cement	05 KM	7.44							
										Steel	05 KM	148.81							
										Tiles	05 KM	14.88							
										R. Stone	05 KM	280.93							
										Qty	Amt	Qty	Amt.	Qty	Amt				
42	36.12	BDP 6	Providing and applying plastic emulsion paint of approved quality,	Bd.P.6 Page No. 414	Sqmt	70.00	7.70	62.30	0.00								7.70	70.00	**70.00**
43	40.01	BDU 1	Providing and fixing mild steel grill work for windows, ventilators etc. 20 kg/sqm as per drawing	Bd.U.1 Page No. 537	Sqmt	1845.00	202.95	1642.05	0.00								202.95	1845.00	**1845.00**
44	33.13	BDM 7A	Providing and laying cement concrete flooring 50 mm thick with M15 cement concrete.	Bd.M.7 Page No. 383	Sqmt	547.00	60.17	486.83	0.00	**0.025**	5.74	**0.04**	8.73	**0.37**	2.72	17.19	60.17	564.19	**564.20**
45	42.27	BDV 60	Providing, laying and fixing P.V.C. pipe of 75mm dia.	As directed by Engineer in charge.	Rmt	390.00	42.90	347.10	0.00								42.90	390.00	**390.00**
	42.28	BDV 60	Providing, laying and fixing P.V.C. pipe of 110 mm. dia.	As directed by Engineer in charge.	Rmt	535.00	58.85	476.15	0.00								58.85	535.00	**535.00**
46	42.70	BDV	Providing and fixing reinforced cement concrete cover of size 60 cm x 45 cm with frame over inspection chamber	As directed by Engineer in charge.	Nos	5024.00	552.64	4471.36	0.00								552.64	5024.00	**5024.00**
47	41.67	BDV 30	Providing and fixing coloured glazed earthen ware Wash Hand Basin of 45 cm x 30 cm size	Bd.V.30 Page No. 565	Nos	5161.00	567.71	4593.29	0.00								567.71	5161.00	**5161.00**
48	42.02	BDV 38	Providing and fixing 15cm x 10cm salt glazed stoneware gully trap in cement concrete 1:4:8 outside the building	Bd.V.38, Page No. 572	Nos	1374.00	151.14	1222.86	0.00								151.14	1374.00	**1374.00**

Name Of Work :- Construction of Women's Rest Room (For Ladies Staff) at …….. in Forest Comp. No……. in ……. Beat in ……Round in …….. Range of ……Forest Division.

Sr. No.	Item No.	Reference No.	Description of the item	Additional Specification	Unit	(After Deduction of SCADA Rs 120/Cum Completed Rate In Rs.	Deduct1% Labour cess + labour amenities and all other overhead charges, 10%=11%	Sub Total	Add 10% for Tribal & 20 % for Naxalite affected area =30%	ADD CARTING OF MATERIAL AS PER LATEST RATE							Add 1% Labour cess + labour amenities and all other overhead charges, 10%=11%	Gross Total	Final Rate Adopted
										Buld.			Rd			Total Trnsprtation charges			
										40mm & Below	05 KM	229.63							
										Bricks	5 KM	0.48							
										80mm & above	05 KM	220.06							
										Sand	05 KM	229.63							
										Murum	05 KM	220.06							
										Cement	05 KM	7.44							
										Steel	05 KM	148.81							
										Tiles	05 KM	14.88							
										R. Stone	05 KM	280.93							
										Qty	Amt	Qty	Amt.	Qty	Amt				
49	31.09	BDJ	Providing and applying water proofing treatment using acrylic polymer modified cement based water proofing coating.	As directed by Engineer in charge	Sqmt	594.00	65.34	528.66	0.00	0.08	0.04	0.070	16.07			16.11	65.34	610.11	**610.10**
50	31.05	BDJ	Providing water proof bedding for flooring of Bath and WC 25 mm thick in C.M. 1:3	As directed by Engineer in charge.	Sqmt	401.00	44.11	356.89	0.00	0.00	0.00	0.028	6.43			6.43	44.11	407.43	**407.45**
51	40.03	BDU 2	Providing and fixing mild steel grill railing 20 kg/sq.m with teak wood hand rail of size 75mm x 60 mm.	Bd.U.2 Page No. 537	Sqmt	2890.00	317.90	2572.10	0.00								317.90	2890.00	**2890.00**
52	23.02	BDC 3	Providing and fabricating structural steel work in rolled sections,	Bd.C.3 Page No. 275	MT	85585.00	9414.35	76170.65	0.00							0.00	9414.35	85585.00	**85585.00**

RFO

ACF

Royalty Statement

Name Of Work :- Construction of Women's Rest Room (For Ladies Staff) at …….. in Forest Comp. No……. in ……. Beat in …….Round in …….. Range of ……Forest Division.

Sr.No	Description of the Item	Unit	Total Qty.of Item	80mm. Metal		Murum		Sand		Rubble	
				Coefi.	**Qty**	Coefi.	**Qty**	Coefi.	**Qty**	Coefi.	**Qty**
1	Providing and laying Cast in situ/Ready Mix cement concrete in M-10	Cum	3.32	0.00	0.00	0.00	0.00	0.470	1.56	0.00	0.00
2	Providing and laying Cast in situ/Ready Mix cement concrete M-20 for R.C.C. work in foundations	Cum	3.71		0.00		0.00	0.450	1.67	0.00	0.00
3	Providing second class Burnt Brick masonry in CM 1:6 in foundations and plinth	Cum	5.11		0.00		0.00	0.320	1.64	0.00	0.00
4	Filling in plinth and floors with contractors material/brought from outside in layers of 15 cm to 20 cm	Cum	7.74		0.00	1.20	9.29	0.000	0.00	0.00	0.00
5	Providing soling using 80 mm size trap metal in 15 cm. layer	Cum	4.81	1.00	4.81		0.00	0.330	1.59	0.00	0.00
6	Providing and laying Cast in situ/Ready Mix cement concrete M-20 for R.C.C. beams and lintels	Cum	5.46	0.00	0.00	0.00	0.00	0.425	2.32	0.00	0.00
7	Providing and laying Cast in situ/Ready Mix cement concrete M-20 for R.C.C. canopy	Cum	2.77	0.00	0.00	0.00	0.00	0.425	1.18	0.00	0.00
8	Providing and laying Cast in situ/Ready Mix cement concrete M-20 for R.C.C. slabs and landings	Cum	9.16	0.00	0.00	0.00	0.00	0.425	3.89	0.00	0.00
9	Providing and laying Cast in situ/Ready Mix cement concrete M-20 for R.C.C. columns	Cum	2.09	0.00	0.00	0.00	0.00	0.425	0.89	0.00	0.00
10	Providing second class Burnt Brick masonry CM 1:6 in superstructure	Cum	11.64	0.00	0.00	0.00	0.00	0.320	3.73	0.00	0.00
11	Providing second class Burnt Brick masonry CM 1:4 in half brick thick wall	Sqmt	27.27	0.00	0.00	0.00	0.00	0.034	0.93	0.00	0.00
12	Providing and laying ceramic tiles for flooring	Sqmt	3.72	0.00	0.00	0.00	0.00	0.017	0.06	0.00	0.00
13	Providing and laying ceramic tiles for dado and skirting	Sqmt	14.81	0.00	0.00	0.00	0.00	0.017	0.25	0.00	0.00
14	Providing and laying vitrified tiles a) Flooring	Sqmt	19.91	0.00	0.00	0.00	0.00	0.020	0.40	0.00	0.00

Royalty Statement

Name Of Work :- Construction of Women's Rest Room (For Ladies Staff) at …….. in Forest Comp. No……. in ……. Beat in …….Round in …….. Range of ……Forest Division.

Sr.No	Description of the Item	Unit	Total Qty.of Item	80mm. Metal		Murum		Sand		Rubble	
				Coefi.	**Qty**	Coefi.	**Qty**	Coefi.	**Qty**	Coefi.	**Qty**
15	Providing and laying vitrified tiles b) Skirting	Sqmt	3.19	0.00	0.00	0.00	0.00	0.020	0.06	0.00	0.00
16	Providing sand faced plaster	Sqmt	81.17	0.00	0.00	0.00	0.00	0.033	2.68	0.00	0.00
17	Providing internal cement plaster 12mm thick in single coat in cement mortar 1:4	Sqmt	126.80	0.00	0.00	0.00	0.00	0.015	1.90	0.00	0.00
18	Providing internal cement plaster 6mm. thick in a single coat in cement mortar 1:4 with Putty finish	Sqmt	79.85	0.00	0.00	0.00	0.00	0.0076	0.61	0.00	0.00
19	Providing cement based water proofing treatment to terraces (Indian water proofing or alike)	Sqmt	44.44	0.00	0.00	0.00	0.00	0.070	3.11	0.00	0.00
20	Providing water proof bedding for flooring of Bath and WC 25 mm thick in C.M. 1:3	Sqmt	0.93	0.00	0.00	0.00	0.00	0.028	0.03	0.00	0.00
			Total Qty.		**4.81**		**9.29**		**28.49**		**0.00**
			Royalty Charges per Cum		**216.18**		**216.18**		**237.37**		**216.18**
			Deduct Royalty Amount Rs.		**1040.00**		**2008.00**		**6761.00**		**0.00**
			Total Amount Rs.	**9809.00**							

RFO

ACF

Name Of Work :- Construction of Women's Rest Room (For Ladies Staff) at …….. in Forest Comp. No……. in ……. Beat in ……Round in …….. Range of ……Forest Division.

NOTE : Provision for laboratory testing charges. For reimbursement of actual amount of testing charges paid by the contractor, he should produce documentary evidences along with laboratory reports from approved registered Govt. Laboratory of Pwd/Engineering College Etc.

Provision of Quality Control Test and Materials Testing Charges (Schedule of Testing charges for construction material used for Government Works for the Year 2019-20 Effective from 1l O7l2O'19 and valid Upto 30/06/2020)

Name of Tests	No. of Test	Rate per Test	Frequency	Amount
1) Basic Test of Cement				
Standard Consistancy Finess, Specific Gravity, Setting Time (Initial & Final), Compressive Strength, Soundness.	**1.00**	**3770**	**1.00**	**3770.00**
2) Basic Test of Aggregate				
Water Absorption, Specific Gravity, Impact Value/Crushing Value.	**1.00**	**2600**	**1.00**	**2600.00**
3) Fine Aggregate				
Fineness Modulus (Sieve Analysis),Silt & Clay Content	**1.00**	**1380**	**1.00**	**1380.00**
4) Bricks				
Water Absorption (Set of 5 Bricks.)Compressive Strength (Set of 5 Bricks), Efflorescence (Set of 5 Bricks)	**1.00**	**2175**	**1.00**	**2175.00**
5) Flooring Tiles				
Flooring of Natural Stone (Kota, Marble, Granite Tandur etc.) Water Absorption, Specific gravity)	**1.00**	**1380**	**1.00**	**1380.00**
6) Ceramic Tiles / Vetrified Tiles				
Water Absorption, Models of Rapture (Set of 6 Tiles)	**1.00**	**1595**	**1.00**	**1595.00**
7) Concrete				
Compressive strength of C.C. Cube (Set of 3 Cubes)	**6.00**	**690**	**2.00**	**8280.00**
8) Steel Bar Testing				
Upto 16 mm (Set of 3 Bars)	**1.00**	**1275**	**1.00**	**1275.00**
Above 16 mm (Set of 3 Bars)	**1.00**	**1595**	**1.00**	**1595.00**
			Total Amount for Testing	**24050.00**

RFO **ACF**

3D VIEWS

DWG. TITLE :	**PLAN**	DRAWN BY:	Ar.Sherin	NORTH:	CLIENT: **" VAN BHAVAN "** CIVIL LINES, NAGPUR.
REVISION NO.	**R10**	CHECKED BY:	Ar.Moin		PROJECT TITLE: **PROPOSED REST ROOM**
DATE	**15.OCT.2021**	SCALE :	N.T.S.		
NOTE: ■ ADVANCE COPY ☐ PRESENTATION ☐ WORKING					

MOIN
ARCHITECTS & DESIGNERS
Ar. Moin : 9764651722
Opp Gandibagh Garden Gate,
Central Avenue, Nagpur - 440 002.
ARCHITECTS PLANNERS & INTERIOR DESIGNERS

DOOR WINDOW SCHEDULE

D1	0.90 X 2.10
D2	0.75 X 2.10
W	1.20 X 1.20
V1	0.45X 0.60
V2	0.45 X 0.60

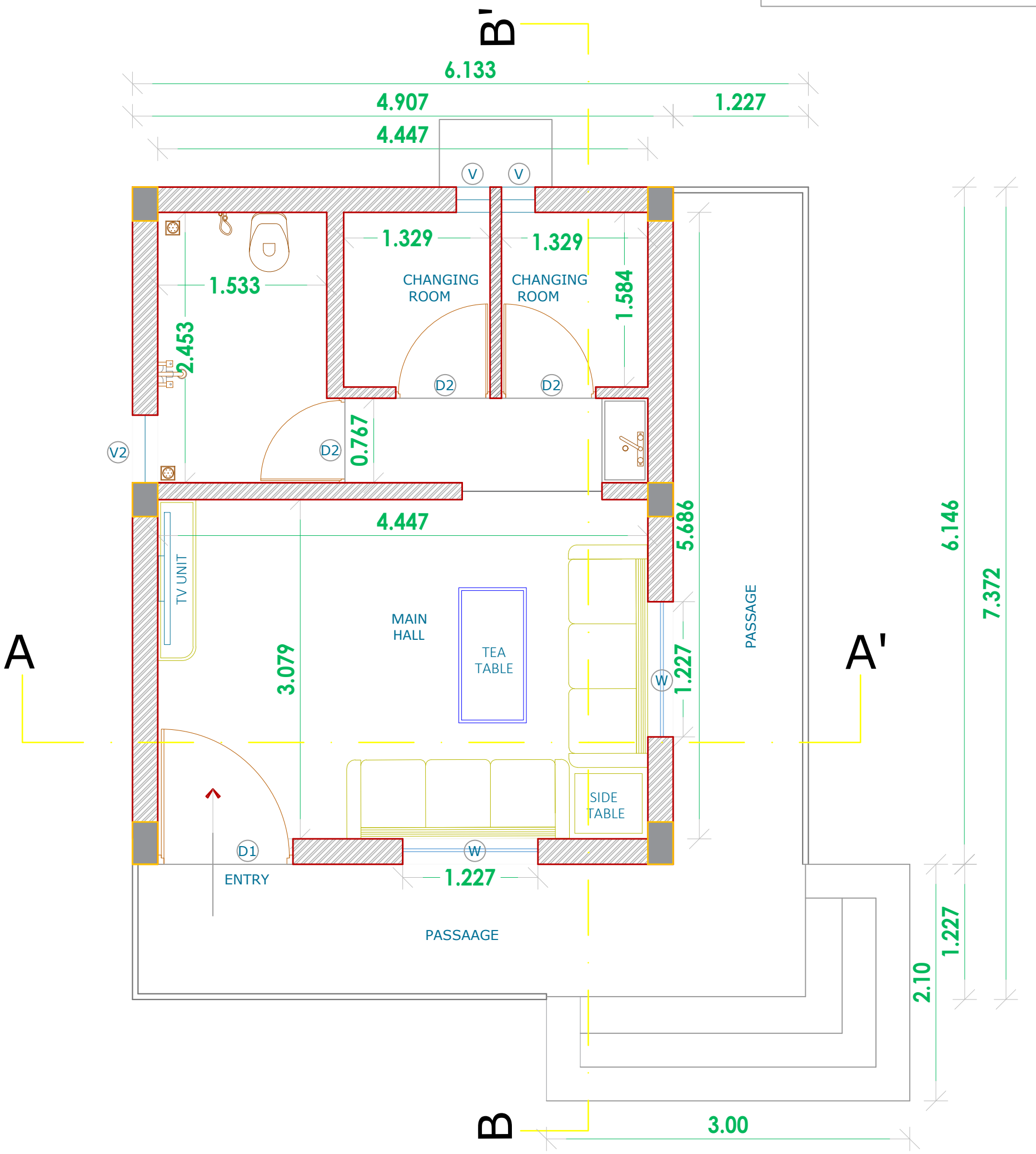

GROUND FLOOR LAYOUT

DWG. TITLE :	**PLAN**	DRAWN BY:	Ar.Sherin	NORTH:	CLIENT: **" VAN BHAVAN "** CIVIL LINES, NAGPUR.
REVISION NO.	**R10**	CHECKED BY:	Ar.Moin		
		SCALE :	N.T.S.		PROJECT TITLE: **PROPOSED REST ROOM**
DATE	**15.DEC.2021**				
NOTE:	■ ADVANCE COPY ☐ PRESENTATION ☐ WORKING				

MOIN
ARCHITECTS & DESIGNERS
Ar. Moin : 9764651722
Opp Gandibagh Garden Gate,
Central Avenue, Nagpur - 440 002.
ARCHITECTS PLANNERS & INTERIOR DESIGNERS

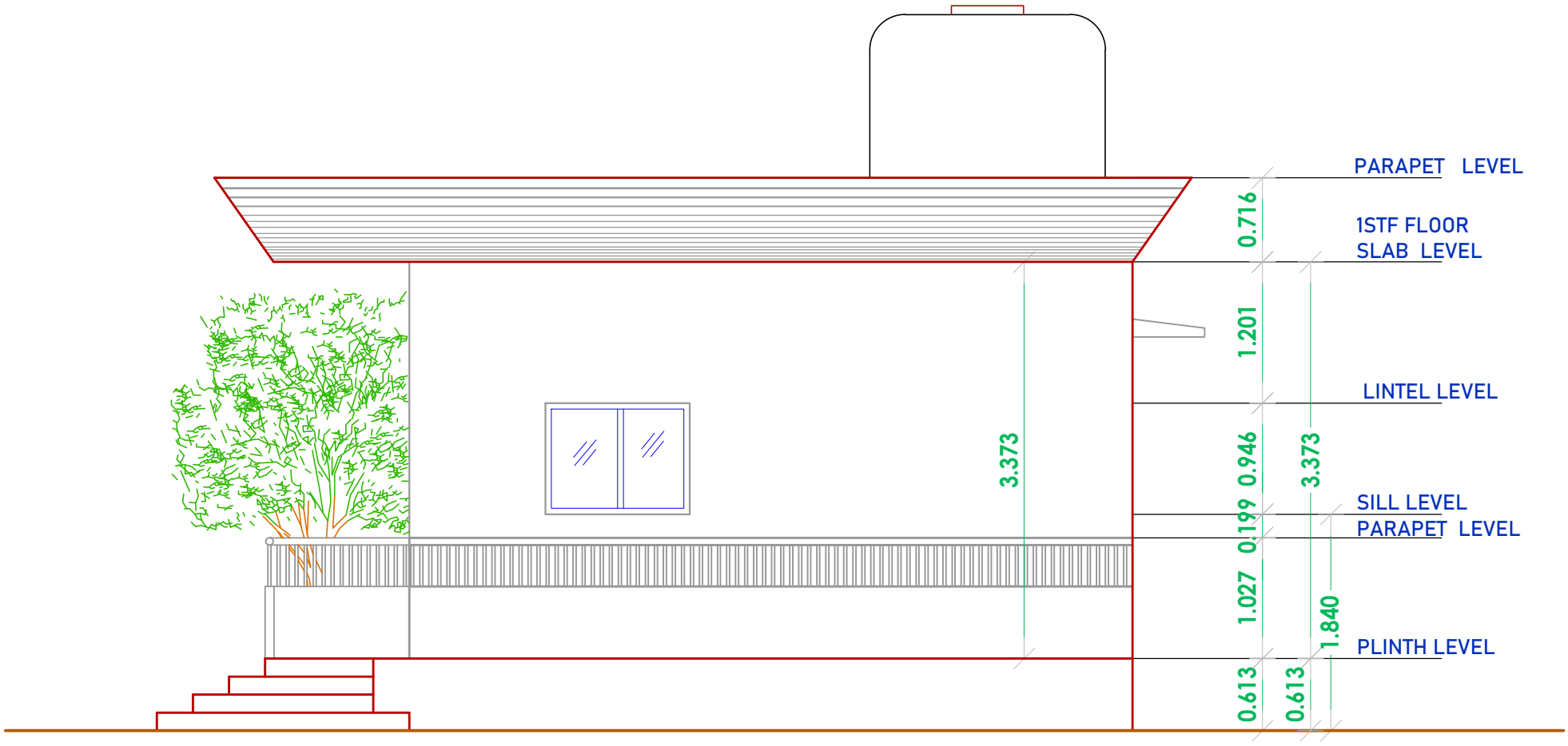

SIDE ELEVATION

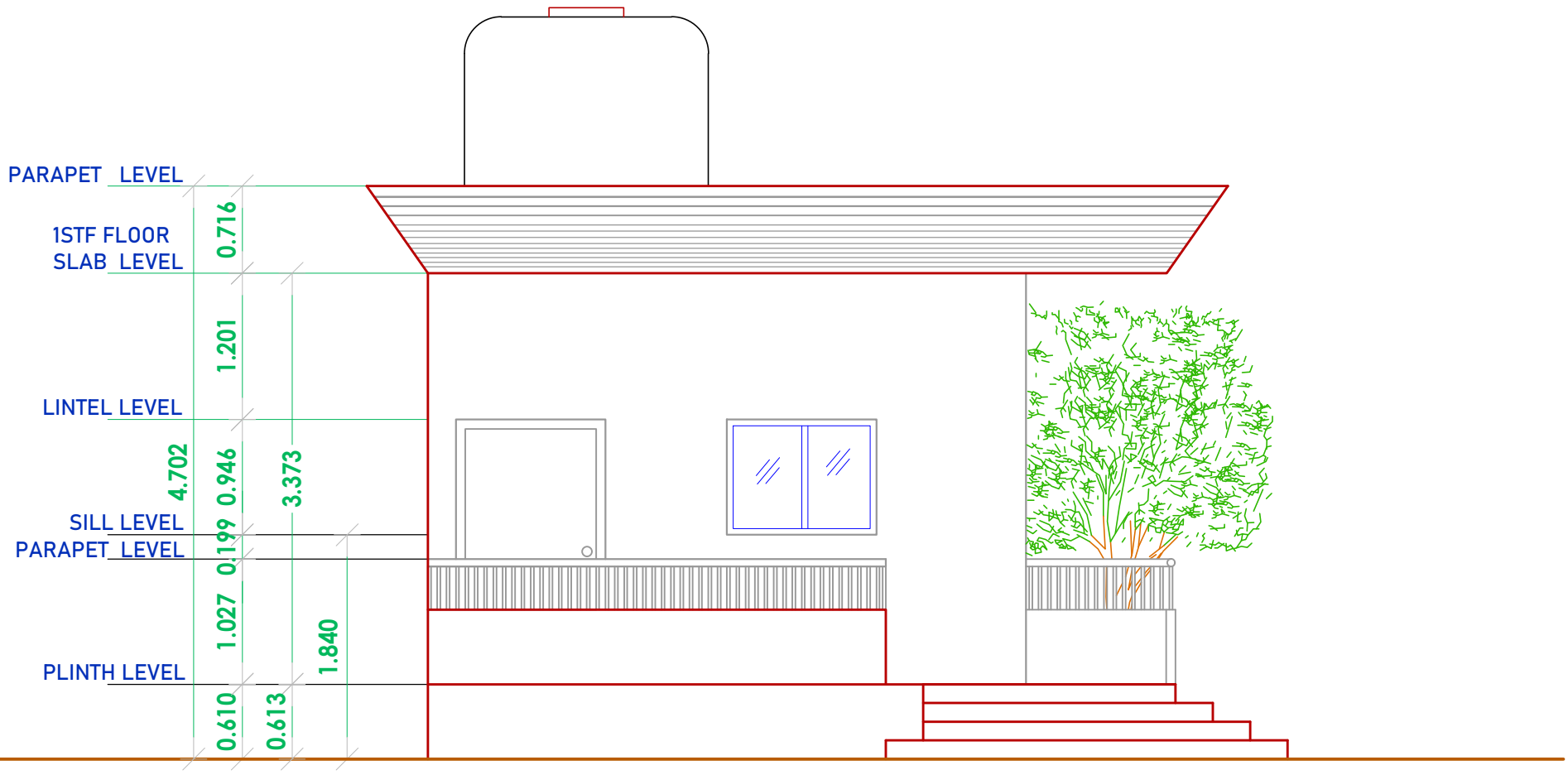

FRONT ELEVATION

ELEVATIONS

DWG. TITLE :	**PLAN**	DRAWN BY:	Ar.Sherin	NORTH:	CLIENT: **" VAN BHAVAN "** CIVIL LINES, NAGPUR.
REVISION NO.	**R10**	CHECKED BY:	Ar.Moin		
		SCALE :	N.T.S.		PROJECT TITLE: **PROPOSED REST ROOM**
DATE	**15.DEC.2021**				
NOTE:	■ ADVANCE COPY ☐ PRESENTATION ☐ WORKING				

MOIN
ARCHITECTS & DESIGNERS
Ar. Moin : 9764651722
Opp Gandibagh Garden Gate,
Central Avenue, Nagpur - 440 002.
ARCHITECTS PLANNERS & INTERIOR DESIGNERS

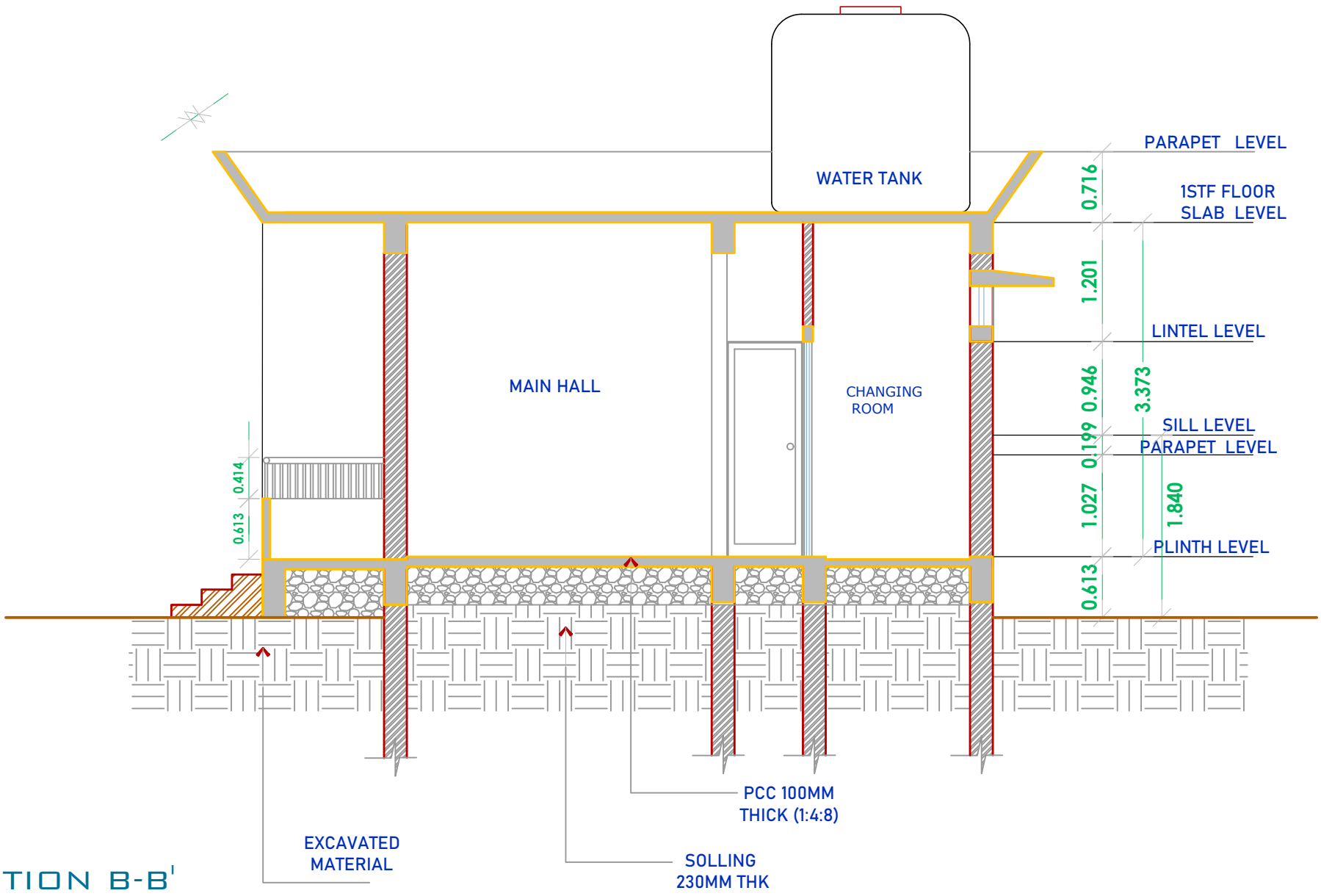

SECTION B-B'

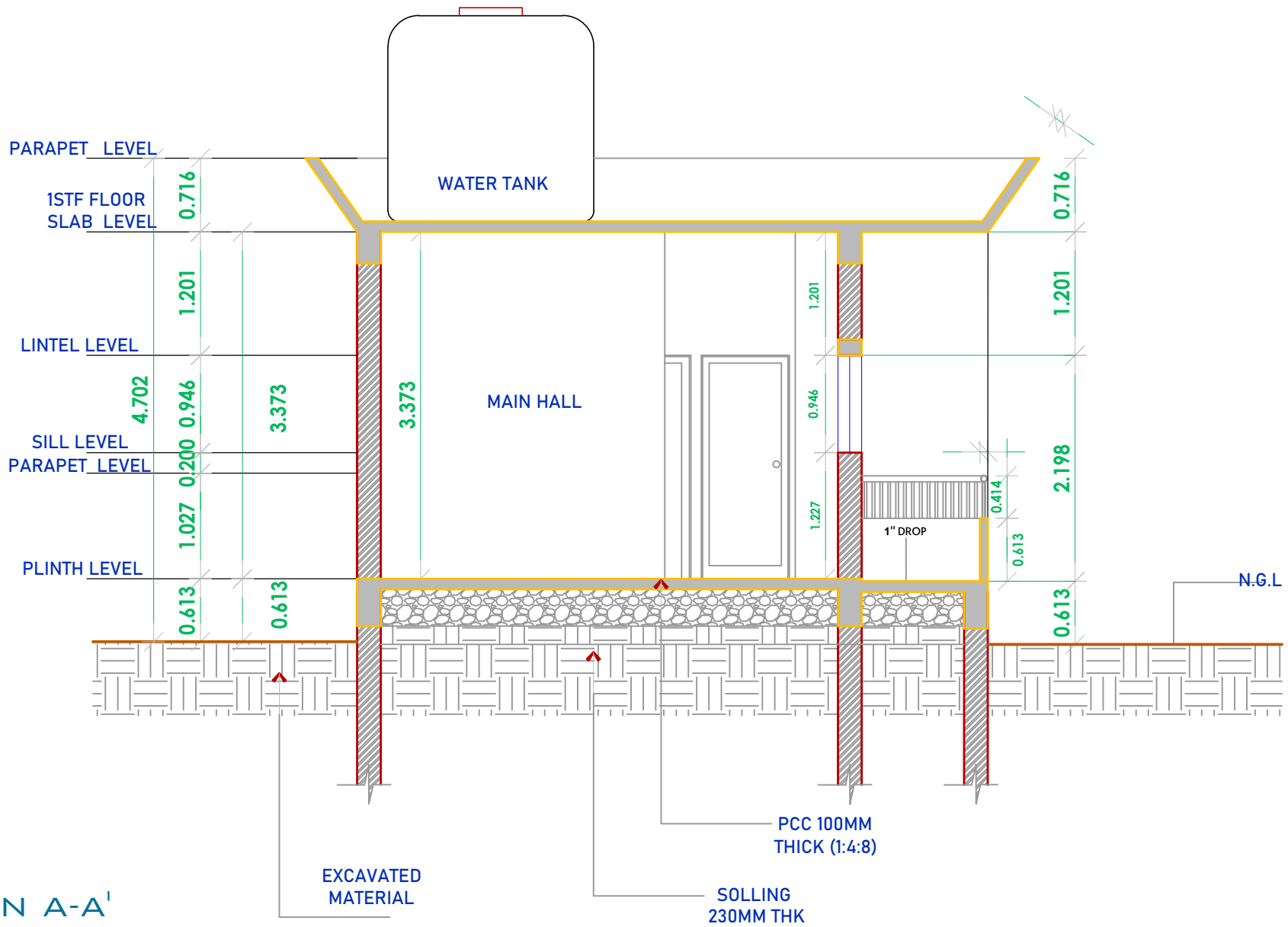

SECTION A-A'

SECTIONS

DWG. TITLE :	**PLAN**	DRAWN BY:	Ar.Sherin	NORTH:	CLIENT: **" VAN BHAVAN "** CIVIL LINES, NAGPUR.
REVISION NO.	**R10**	CHECKED BY:	Ar.Moin		PROJECT TITLE: **PROPOSED REST ROOM**
DATE	**15.DEC.2021**	SCALE :	N.T.S.		
NOTE:	■ ADVANCE COPY ☐ PRESENTATION ☐ WORKING				

MOIN
ARCHITECTS & DESIGNERS
Ar. Moin : 9764651722
Opp Gandibagh Garden Gate,
Central Avenue, Nagpur - 440 002.
ARCHITECTS PLANNERS & INTERIOR DESIGNERS

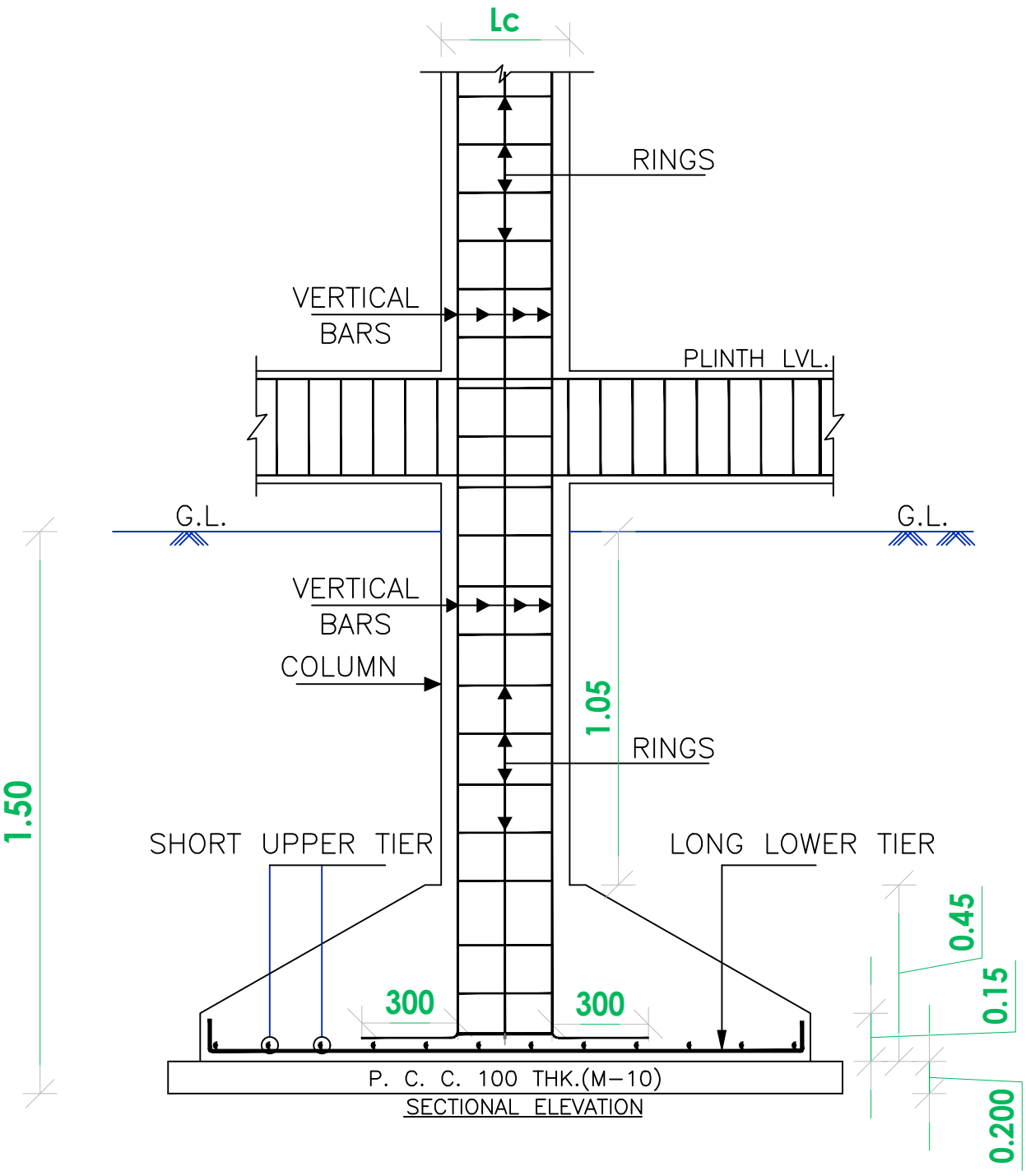

SECTIONAL ELEVATION

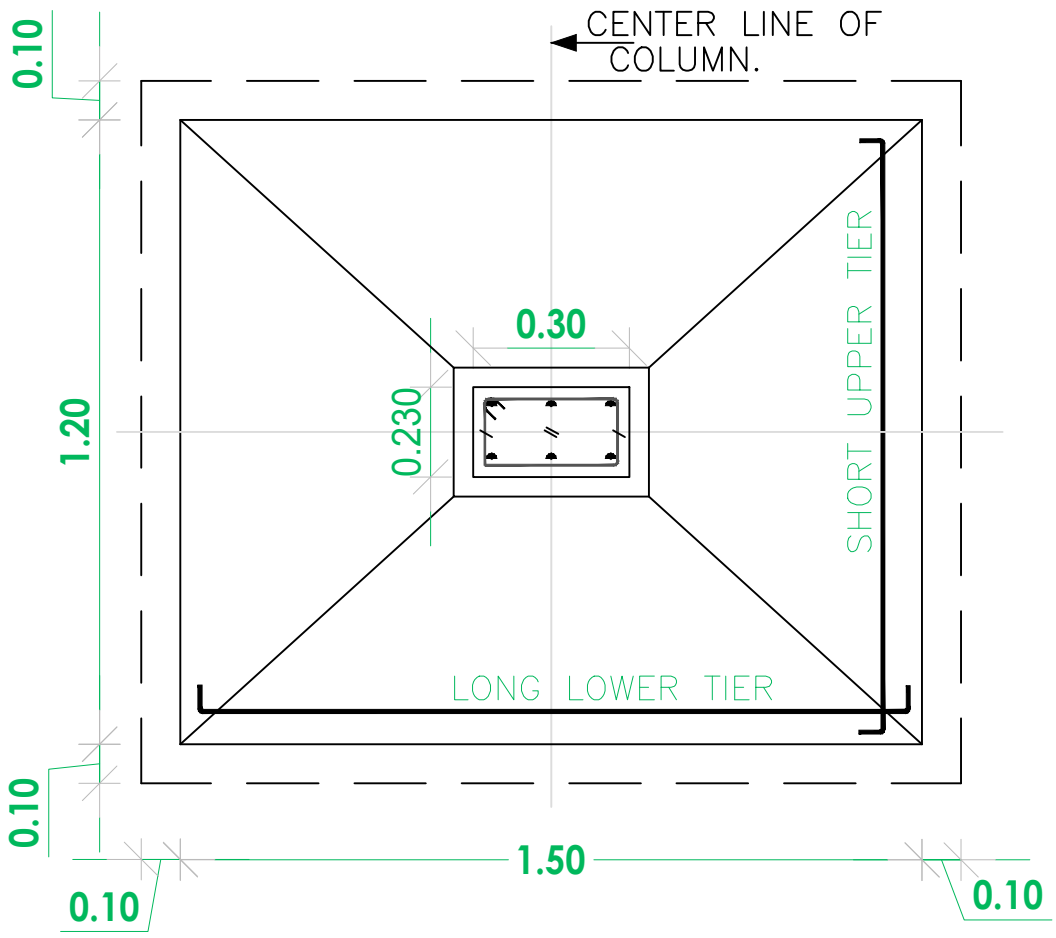

TYPICAL PLAN OF COLUMN FOOTING

DETAILS

DWG. TITLE :	**PLAN**	DRAWN BY:	Ar.Sherin	NORTH:	CLIENT: **" VAN BHAVAN "** CIVIL LINES, NAGPUR.
REVISION NO.	**R10**	CHECKED BY:	Ar.Moin		
		SCALE :	N.T.S.		PROJECT TITLE: **PROPOSED REST ROOM**
DATE	**15.DEC.2021**				
NOTE:	■ ADVANCE COPY ☐ PRESENTATION ☐ WORKING				

MOIN
ARCHITECTS & DESIGNERS
Ar. Moin : 9764651722
Opp Gandibagh Garden Gate,
Central Avenue, Nagpur - 440 002.
ARCHITECTS PLANNERS & INTERIOR DESIGNERS

प्रधान मुख्य वन संरक्षक (वन बल प्रमुख), महाराष्ट्र राज्य यांचे कार्यालय
Office of the Principal Chief Conservator of Forests (HoFF), Maharashtra State
वन भवन, सिविल लाइन्स, नागपूर ४४०००१ Van Bhavan, Civil Lines, Nagpur 440001
अपर प्रधान मुख्य वन संरक्षक (संधारण), महाराष्ट्र राज्य
Additional Principal Chief Conservator of Forests (Conservation), Maharashtra State
apccfcon@mahaforest.gov.in; Phone: 0712-2556944, 2555675; Fax: 2550675; www.mahaforest.gov.in

CIRCULAR

No.Desk-27/2/Cr.86/ 682/2019-20
Nagpur - 440 001, dated 27/9/2020

Subject:- Forest Boundary Demarcation and Erection of Permanent Boundary Marks.

Ref;-(1)Letter no /cf /lrc/sr4-34/153/2002-03/153 dt.21/06/2002

(2)Letter no /d.27/cflrc/sr-34(3)/104/2006-07 dt.3/5/2006

1.0 **Background** :- Forest Land is the basic resource, bounded by natural and artificial boundaries. Forest lands are also adjoining to Revenue Lands and Private Lands. In order to protect the Forest land it is necessary to properly demarcate the boundary and erect proper boundary marks on the Forest Boundary at proper places. The Forest Department has been using different types of boundary marks to demarcate the Forest Boundary for several decades. The maintenance and repairs of these boundary marks is a recurring task. The clearance of boundaries of forests is carried out once in a five year period under budget head 24060102 (Forest Survey, Demarcation and Settlement) as a 1/5th demarcation plan. Generally two types of boundary marks (Class-I & Class-II) were prescribed in the Bombay Forest Manual Vol.II which were subsequently adopted in the Maharashtra Forest Manual. Details are given in Maharashtra Forest Manual Vol-II Part V [C] article 5.10. While demarcating the Forest Boundary stone cairns / RCC pillars are erected in the past.

The shape of these cairns was a truncated cone with the following dimensions

Description	Class-I Cairn	Class-II Cairn
Flag stone	15"	15"
Foundation	0.30 m	0.30 m
Base	2.10 m dia	1.20 m dia
Height	1.5 m	1 m
Top	1.20 m dia	0.75 m dia

At the centre of top, wooden post or stone of rectangular size of 15" height is prescribed. Class-I cairns were erected at main points and angles, whereas Class-II cairns / pillar were erected in between two cairns / pillar in such a way that one cairn/pillar is clearly

visible from the previous one. During 2001, R.C.C. pillars of 1.40 m. length (class-I) and 0.90 m. length (class-II) were prescribed for boundary demarcation in sensitive forest area.

2.00 Need for Creation of permanent Boundary mark :-

The fact regarding the non-clarity of boundaries of forests in India and its effect on increasing the probability of encroachment & illegal mining on forest lands, was brought to the notice of Hon'ble Supreme Court in petition no. 202/95 T. N. Godaverman Vs Govt. of India and petition no. 224/97 through a report prepared by a committee Constituted under the Chairmanship of Additional Inspector General of Forest, Govt. of India. In many states, including Madhya Pradesh, a firm determination to fix the permanent pillars on well surveyed and demarcated boundaries was taken as per the commitment given to Supreme Court by the committee constituted by Govt. of India.

3.00 Present Status: Boundary and Boundary marks:-

For proper management and protection of forests prominently visible, clean and permanent boundary marks is a pre-requisite. Due to enormous increasing land hunger and also due to steep rise in the cost of land, these easily replaceable cairns had gradually lost their protective significance and strength. So these cairns were replaced by RCC pillars. With the advent of GIS based technology, it is felt essential that a forest boundary mark must clearly show its positional co-ordinates and other important information regarding forest land for assisting the field staff in protection activity. On these RCC pillars, expect its serial number, no other information could be written. Further at some places, these pillars were found broken and iron bars stolen.

Following are some of the serious limitations of existing boundary marks which are posing multifarious threats to the existing forest estate.

1. Life - Easily replaceable, removable boundary marks.
   - Not permanent, temporary and fragile.
2. No geo tagging, No geo referencing
3. Ground position does not concur with the information given on MAP.
4. Poor visibility in the night.

4.00 After careful study of boundary pillars prepared in adjoining Madhya Pradesh State and after careful study of prototype of boundary pillars of various dimensions erected in the field, on dated 17th May, 2019, a team of Senior officers Chaired by Principal Chief Conservator of Forests (Head of Forest Force) M.S. Nagpur, after detailed deliberations, **proposed the following design of class-I and class-II boundary pillars for the forest boundary in the State of Maharashtra to be adopted from year 2019-20 onwards.**

Sr. No.	Description	Class-I boundary mark	Class-II boundary mark
1	Flag stone (to be casted at the time of casting of pillar)	0.23mx0.23mx0.23m	0.23mx0.23mx0.23m
2	Foundation size below G.L.	0.90mx0.90mx0.30m	0.60mx0.60mx0.30m
3	Base size	0.90mx0.90m	0.60mx0.60m
4	Height above G.L.	1.00m	0.75m
5	Top size/dimension	0.60mx0.60m	0.45mx0.45m
6	Weight	1687kg	674kg
	Construction cost as per 2018-19 S.S.R. Rs. (Note:- The estimated cost may vary as per site conditions & it is exclusive of taxes)	**6700/-** Say Rs. 8000/-	**3400/-** Say Rs 4000/-

Designs, plans and estimates of these proposed **Class-I** & Class-II boundary pillars are enclosed as Annexure-I

5.00 Hence in supersession of earlier instructions under reference 1&2 , in exercise of powers vested as per sub rule (3) of rule 70 of the Maharashtra Forest Rules 2014, the Designs and Standards of permanent boundary pillars as indicated in Annexure – I of this circular are hereby approved for the State of Maharashtra. **It is hereby directed that whenever & wherever boundary pillars are erected, these approved designs of permanent pillars shall be adopted by all the three wings viz. Forest, Wildlife & FDCM Ltd. in the State of Maharashtra. The works of erection of boundary pillars shall be carried out as per the guidelines mentioned below.**

5.1. During 2019-20, Survey/demarcation works are to be carried out as per survey demarcation scheme within the sanctioned budget. **Those pillars which are broken or stolen away or dismantled shall be replaced by the new approved pillars. While erecting a pillar, the correct position of the pillars shall be ascertained by the officer not below the rank of Assistant Conservator of Forests. The necessary certificate for ascertaing the location duly signed by ACF should be preserved as a permanent record of the land records of the division. The necessary information as enclosed herewith shall be painted on newly erected pillars.** It is decided to erect the permanent pillars on the boundaries of forests in the entire state within next five years i.e. up to 2025-26. The officers in-charge of Forest Division are requested to assess the entire length of boundary and prepare detailed estimates for erecting new pillars replacing old one in their division along with DGPS survey of boundary wherever required. Divisions shall place requisition or the grants accordingly.

5.2 <u>For erection of permanent pillars, following areas shall be given top priority.</u>

i) Forest areas vulnerable to illegal mining

ii) Forest areas inside or surrounding cities.

iii) Forest areas adjoining revenue lands and private lands.

iv) Newly notified areas u/s4-20&29 of the Indian Forest Act 1927.

v) Newly notified areas u/s 18, 26-35 &38 of the Wildlife (Protection)Act 1972.

5.3 Annual work of survey and demarcation includes the DGPS Survey wherever required, clearance of boundary line and erection of permanent boundary pillars. The technical sanction as per new design and plan for construction of boundary pillars shall be given by respective Deputy Engineer in the circle. Site specific estimates shall be prepared by Engineers/Deputy engineer as per S.S.R rates applicable for that year and these estimates shall be technically approved by the engineers as per the delegated powers. For Technical sanction and Administrative approval, competent authority shall be as per GR No. MSC-2011/CR. 178/F-5, dated 30/09/2011.

5.4 After getting technical sanction and administrative approval work shall be completed within the sanctioned budget as per the existing norm. Class-I pillars shall be erected at the corners or at the point of change of survey number and at the end points of straight lines. Class-II intermediate pillars shall be erected at suitable distances such that next pillar is clearly visible from the previous one. As a general norm approximately two Class-I pillars and three intermediate Class-II pillars shall be fixed for every 1 k.m. length of boundary.

5.5 The pillars and the indicator stone shall be painted and the required information shall be written on it, as per the instructions attached herewith in Annexure-II. The serial number on the pillar shall be as per pillar register and as mentioned in the working plan. In absence of these documents, the pillar number in the divisions shall be decided by the committee Chaired by the Chief Conservator of Forests of the territorial circle. The Working Plan Officer and the concerned Deputy Conservator of Forests shall be the members of this committee.

5.6 The location of the pillars before construction shall be verified from the following documents by the officer not below the rank of ACF.

1. Survey of India Topo sheet
2. Pillar Register in the electronic format
3. Compartment history
4. Notification regarding R.F/P.F/Sanctuary and National Park
5. Village Map

6. Report of the Forest Settlement Officer

7. Working plan/Management map

8. Maps prepared by Forest Survey and demarcation units.

9. GPS Verification

10. Cross verification with local Bench marks erected & preserved by Land Record Department.

The certificate of verification to that effect shall be a permanent part of land records.

5.7 After construction of pillars, the work of construction shall be checked for quality by the officer not below the rank of ACF.

5.8 During construction of pillars, the sample of cement mortar mix shall be taken and checked for the quality control by the engineering wing as per prescribed norms and the certificate shall be maintained as permanent part of land records.

5.9 Photograph of the pillars so constructed shall be uploaded on Asset Monitoring System of IT cell and shall also be preserved at Division and Range level.

Enclosed :- Annexure – I (page no. 1to 10)
Annexure – II (page no. 1& 2)

o/c approved by PCCF(HoFF) M. S. Nagpur

(S. G. Tembhurnikar)
Additional Principal Chief Conservator of Forest
(Conservation) M.S. Nagpur
For PCCF(HoFF) M.S. Nagpur

24/11/20

Copy to - for information.

Principal Secretary (Forests) Mantralaya , Mumbai -32.
Managing Director, FDCM Ltd., Nagpur.
Principal Chief Conservator of Forests (Wildlife), M.S. Nagpur.
Principal Chief Conservator of Forests (I.T.P.), M.S. Nagpur.
Principal Chief Conservator of Forests (Budget, Planning & Development), M.S. Nagpur
Principal Chief Conservator of Forests (Production & Management), M.S. Nagpur.
Principal Chief Conservator of Forests (Social Forestry), M.S. Pune.
Additional Principal Chief Conservator of Forests (Protection) M.S. Nagpur
Additional Principal Chief Conservator of Forests & Nodal Officer M.S. Nagpur
Additional Principal Chief Conservator of Forests (NTFP Monitoring And Evalution) M.S. Nagpur
Additional Principal Chief Conservator of Forests (Conservation) M.S. Nagpur
Additional Principal Chief Conservator of Forests (Admin Subordinate Cadre) M.S. Nagpur
Additional Principal Chief Conservator of Forests & Chief Executive Officer (Maha-CAMPA) M.S. Nagpur
Additional Principal Chief Conservator of Forests (Personnel) M.S. Nagpur

(P.T.O)

(75)

Additional Principal Chief Conservator of Forest (Wildlife East) Nagpur
Additional Principal Chief Conservator of Forest (Wildlife West) Borivali at Mumbai
Additional Principal Chief Conservator of Forest & Field Director Melghat Tiger Project Amravati
Additional Principal Chief Conservator of Forests & Mangroove Cell Head Mumbai
Chief Conservator of Forests (T) Nagpur
Chief Conservator of Forests (T) Chandrapur
Chief Conservator of Forests (T) Yavatmal
Chief Conservator of Forests (T) Gadchiroli
Chief Conservator of Forests (T) Kolhapur
Chief Conservator of Forests (T) Nashik
Chief Conservator of Forests (T) Pune
Chief Conservator of Forests (T) Aurangabad
Chief Conservator of Forests (T) Dhule
Chief Conservator of Forests (T) Thane
Chief Conservator of Forests (T) Amravati
Chief Conservator of Forests (Land Record) Nagpur
Deputy Chief Conservator of Forest (Land Record) Panvel
Settlement Commissioner & Director of Land Record, M.S Pune.

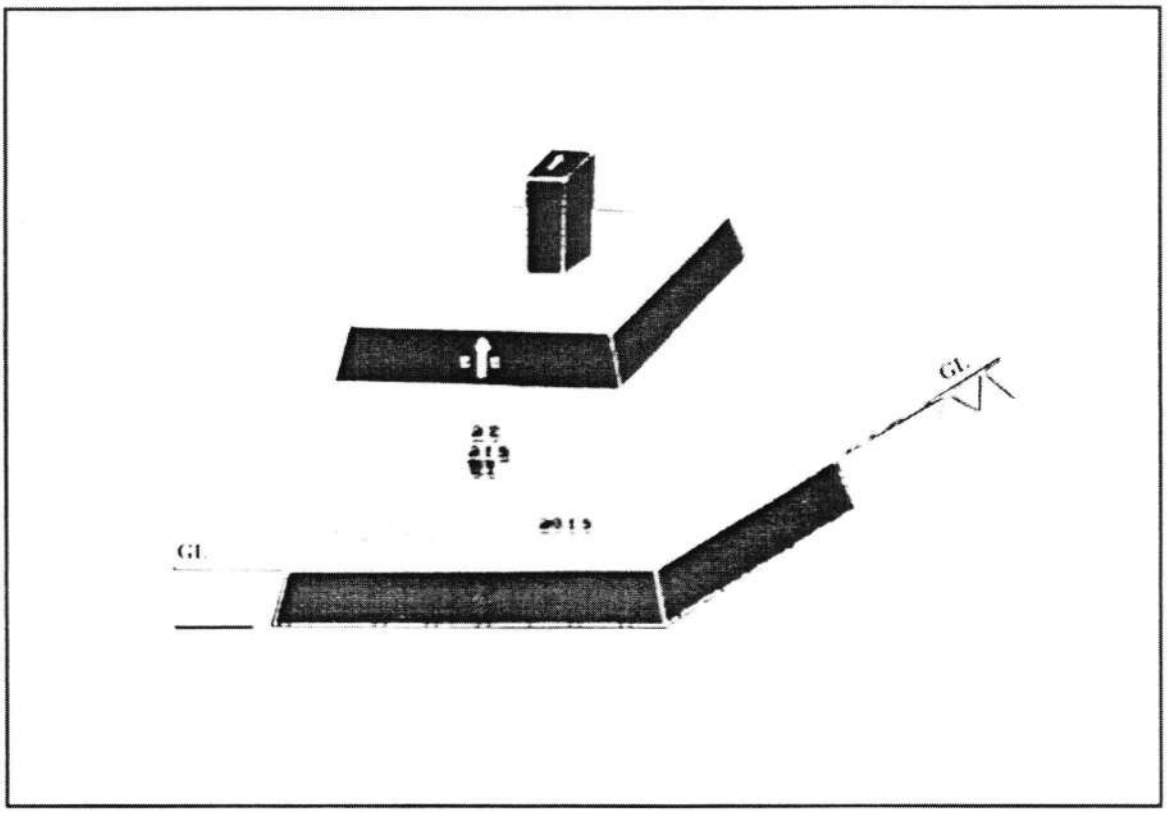
GL.
GL.

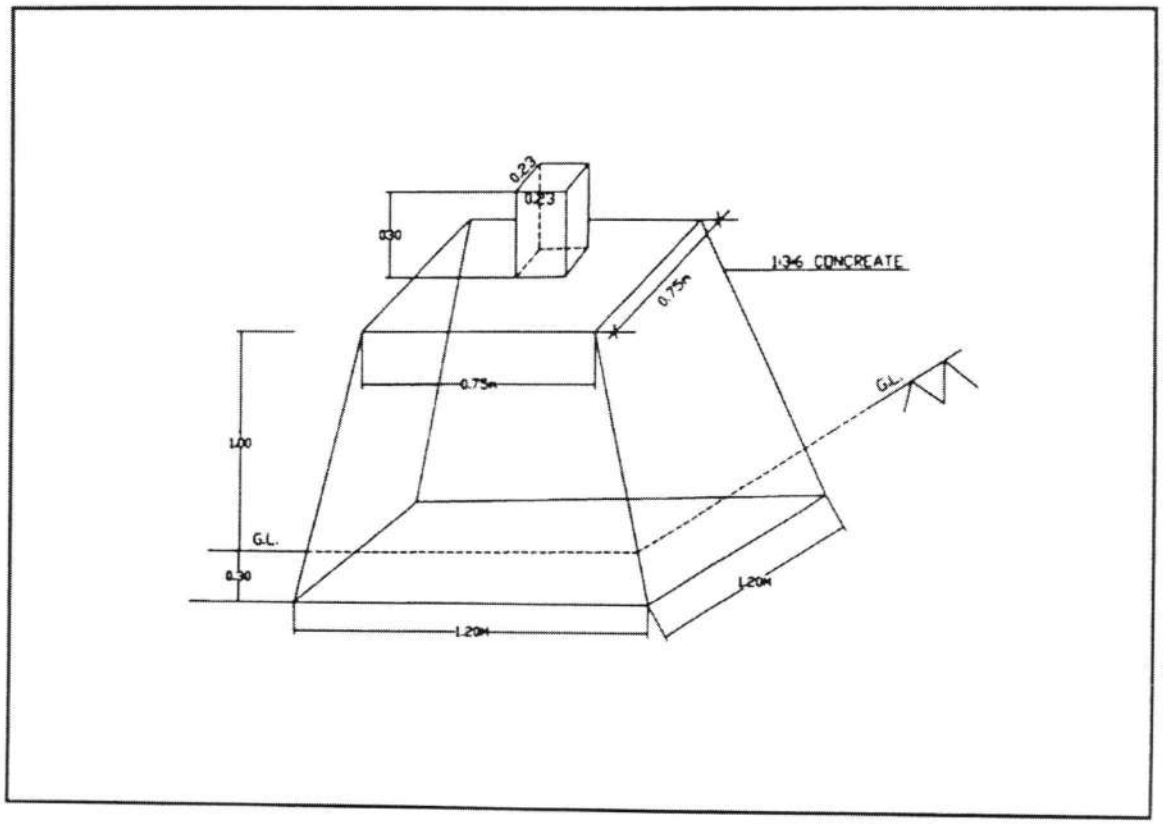
0.23
0.23
0.30
1:3:6 CONCREATE
0.75m
0.75m
GL.
1.00
GL.
0.30
1.20M
1.20M

ANNEXURE – I

CLASS-I

DETAIL ESTIMATE

FOREST DEPARTMENT

.---------- CIRCLE

.---------- DIVISION

Construction of Concrete Boundary Pillar
SIZE - B -900mm x T- 600mm x H-1300mm

GPS READING

N
E

Name Of Work :- Construction of Concrete Boundary Pillar in Comp. No. at in Beat in Round in Range in Division in Circle.

Grand Total Amount Rs.
6700.00

Name Of Work :- Construction of Concrete Boundary Pillar In Comp. No. at in
Beat in Round in Range In Division In Circle.

Mesurement & Abstract.

ITEM OF WORK	Unit	NO	L	B	D/H	QTY.	AMOUNT
ITEM NO.4							
Providing **internal cement plaster 6mm. thick in a single coat in cement mortar 1:4 without Neeru finish** to concrete surface in all positions, including scaff ing and curing etc. complete.							
Spec. No. Bd.L.1 Page No. 367							
S.S.R. Item No.32.012 /Page No.260							
For Boundary Pillar							
4 x ((0.90+0.60)/2) x 1.30 = 3.90	Sqmt	4.00	0.75	1.30		3.90	
For Top area 0.60 x 0.60 = 0.36	Sqmt	1.00	0.60	0.60		0.36	
					Net Qty.	4.26	
			@ Rs.	150.95	/Sqmt	Rs.	643.00
ITEM NO.5							
Providing and applying priming coat on concrete/ masonary/ Asbestos Cement plastered surfaces including scaffolding if necessary, preparing the surface by thoroughly cleaning oil, grease, dirt and other foreign matter and sand							
Spec.No.: As directed by Engineer Incharge.							
S.S.R. Item No.35.21/Page No.282							
For Boundary Pillar							
4 x ((0.90+0.60)/2) x 1.30 = 3.90	Sqmt	4.00	0.75	1.30		3.90	
For Top area 0.60 x 0.60 = 0.36	Sqmt	1.00	0.60	0.60		0.36	
					Net Qty.	4.26	
			@ Rs.	28.00	/Sqmt	Rs.	119.00
ITEM NO.6							
Providing and applying two coats of flat oil paint of approved colour and shade to internal / external plastered surfaces including scaffolding if necessary, cleaning and preparing the surface (excluding primer coat) etc. complete.							
Spec.No.: Bd.O.7 Page No. 406							
S.S.R. Item No.35.12/Page No.281							
White Oil paint is to be used for painting of top Stone							
For Sides	Sqmt	1.00	0.92	0.30		0.28	
For Top	Sqmt	1.00	0.23	0.23		0.05	
					Net Qty.	0.33	
			@ Rs.	76.00	Sqm	Rs.	25.00
ITEM NO.7							
Painting letters upto 20 cm height complete brushes, coir brushers, dusting, cleaning, including cost of paint etc. complete.							
Spec.No.: MORTH 801							
S.S.R. Item No.6.05/Page No.58							
For Pillar at top four Side	Nos	8.00	4.00			32.00	
					Net Qty.	32.00	
			@ Rs.	19.00	/Nos	Rs.	608.00

Name Of Work :- Construction of Concrete Boundary Pillar In Comp. No. at In
Beat In Round In Range In Division In Circle.

Mesurement & Abstract.

ITEM OF WORK	Unit	NO	L	B	D/H	QTY.	AMOUNT
ITEM NO.1							
Removing grass, gazer grass and disposing off out of building premises including making clean the ground by shovel and phavaras etc. complete.							
As directed by Engineer in charge.							
S.S.R. Item No.21.34/Page No.191							
Total Area for Boundary Pillar	Sqmt	1.00	1.50	1.50		2.25	
					Net Qty.	2.25	
			@ Rs.	4.20	/Sqmt	Rs.	9.00
ITEM NO. 2							
Excavation for foundation in earth, soil of all types, sand, gravel and soft murum, including removing the excavated material up to a distance of 50 m. beyond the building area and stacking and spreading as directed, dewatering, preparing the bed for the foundation and necessary back filling, ramming, watering including shoring and strutting etc. complete. (Lift upto 1.5 m.) By Mechanical Means							
Spec.No. :Bd.A1 Page No.259							
S.S.R. Item No.21.02/Page No.187							
For Boundary Pillar	Cum	1.00	1.10	1.10	0.30	0.36	
					Net Qty.	0.36	
			@ Rs.	143.00	/Cum	Rs.	52.00
ITEM NO-3							
Providing and laying Cast in situ/Ready Mix cement concrete in M-10 of trap/ granite/ quartzite/ gneiss metal for foundation and bedding including bailing out water, Steel centering, formwork, laying/pumping, compacting, roughening them if special finish is to be provided, finishing if required and curing complete, with fully automatic micro processor based PLC with SCADA enabled reversible Drum Type mixer/concrete Batch mix plant (Pan mixer) etc. complete. With fine aggregate (Natural Sand / Crushed sand VSI Grade finely washed etc)							
Spec.No. :Bd. E. 1 Page No. 287							
S.S.R. Item No.24.01/Page No.217			(1.30/3) x {(0.36+0.81+√.36 x 0.81)}				
For Boundary Pillar	Cum	1.00		0.741		0.741	
Volumn of Pillar = H/3 (A1+A2+ √A1A2) A1=0.60 x 0.60 = 0.36 Sqmt,A2=0.90 x 0.90 =0.81 Sqmt , H = 1.30 mt							
For Pedastal at top	Cum	1.00	0.23	0.23	0.23	0.012	
					Net Qty.	0.753	
			@ Rs.	4521.10	/Cum	Rs.	3404.00

Name Of Work :- Construction of Concrete Boundary Pillar In Comp. No. at In
Beat In Round In Range In Division In Circle.

Mesurement & Abstract.

ITEM OF WORK	Unit	NO	L	B	D/H	QTY.	AMOUNT
ITEM NO.8							
Providing and applying two coats of exterior weather shield paint of approved manufacture and of approved colour to the plastered surfaces including cleaning ,preparing the plaster surface ,applying primer coat ,scaffolding if necessary, and watering the surface for two days etc complete. NOTE: For Item No. 15 to 18 prior approval of Superintending Engineer will be necessary.							
As directed by Engineer Incharge.							
S.S.R. Item No.35.26/Page No.283							
Quantity as per Item No. 5	Sqm					4.26	
					Net Qty.	4.26	
			@ Rs.	194.00	/Sqm	Rs.	826.00
	Total Rs = (A)						5686.00
	Add Amount For Royalty @ 141.34 = B						55.00
	Sub Total (A+B) = C						5741.00
	Add 12% GST On (C) = D						689.00
	Add 4% Contigensis On (C) = E						230.00
	Add 1% for Labour Insurance On (C) = E						57.00
	Total Amount Rs (C+D+E) = F						6660.00
						Say Rs.	6700.00

Junior Engineer
Office of the Forest Engineer
M. S. Nagpur.

Range Forest Officer(T)

ACF

BOUNDARY PILLAR (CLASS - I)
(OPTION - I)

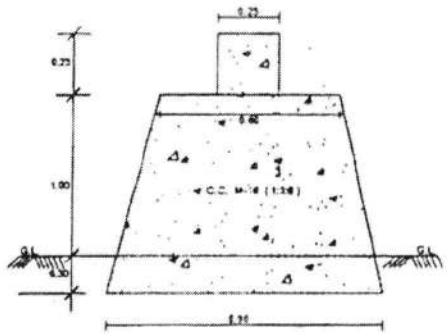

SECTIONAL ELEVATION
" A - A "

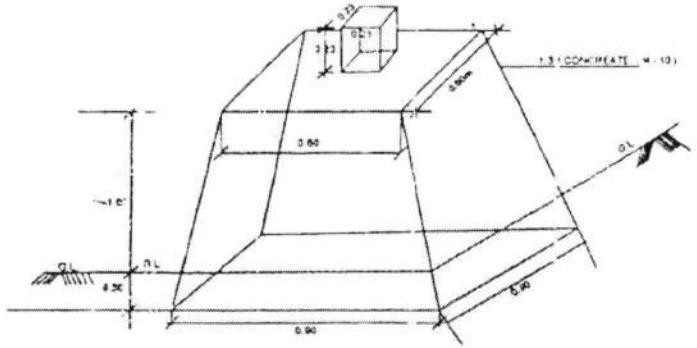

ISOMETRIC ELEVATION

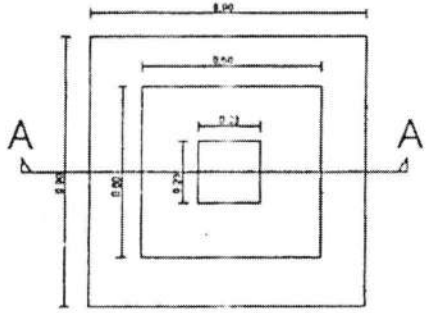

PLAN

A1 (TOP AREA)	= 0.60X 0.60 = 0.36 SQM
A2 (BOTTOM AREA)	= 0.90 X 0.90 = 0.81 SQM
H (TOTAL HEIGHT)	= 1.30M
H1 (BELOW GL)	=0.30M
H2 (ABOVE GL)	=1.00M
VOLUME	= H/3 x (A1+A2+$\sqrt{A1A2}$)
	= 1.30/3 x [0.36+0.81+$\sqrt{0.36 \times 0.81}$]
	= 0.741 CUM

VOLUME FOR PEDESTAL = 0.23 X 0.23 X 0.23 mt = 0.012 CUM

TOTAL VOLUME FOR CONCRETE PILLAR = 0.741 + 0.012 = 0.753 CUM

ESTT. COST = Rs. 6660.00 **Say Rs. 6700.00**

WT. OF PILLAR = 1887.00 Kg.

Junior Engineer
Office of the Forest Engineer
M. S. Nagpur.

Forest Engineer
M. S. Nagpur.

69

Annexure - I

CLASS-II

DETAIL ESTIMATE

FOREST DEPARTMENT

.---------- CIRCLE

.---------- DIVISION

Construction of Concrete Boundary Pillar
SIZE - B -600mm x T- 450mm x H-1050mm

GPS READING

N

E

Name Of Work :- Construction of Concrete Boundary Pillar in Comp. No. at in Beat in Round in Range in Division in Circle.

Grand Total Amount Rs.
3400.00

Name Of Work :- Construction of Concrete Boundary Pillar In Comp. No. at In
Beat In Round in Range in Division in Circle.

Mesurement & Abstract.

ITEM OF WORK	Unit	NO	L	B	D/H	QTY.	AMOUNT
ITEM NO.1							
Removing grass, gazer grass and disposing off out of building premises including making clean the ground by shovel and phavaras etc. complete.							
As directed by Engineer In charge.							
S.S.R. Item No.21.34/Page No.191							
Total Area for Boundary Pillar	Sqmt	1.00	1.20	1.20		1.44	
					Net Qty.	1.44	
			@ Rs.	4.20	/Sqmt	Rs.	6.00
ITEM NO. 2							
Excavation for foundation in earth, soil of all types, sand, gravel and soft murum, including removing the excavated material up to a distance of 50 m. beyond the building area and stacking and spreading as directed, dewatering, preparing the bed for the foundation and necessary back filling, ramming, watering including shoring and strutting etc. complete. (Lift upto 1.5 m.) By Mechanical Means							
Spec.No. :Bd.A1 Page No.259							
S.S.R. Item No.21.02/Page No.187							
For Boundary Pillar	Cum	1.00	0.80	0.80	0.30	0.19	
					Net Qty.	0.19	
			@ Rs.	143.00	/Cum	Rs.	27.00
ITEM NO.3							
Providing and laying Cast in situ/Ready Mix cement concrete in M-10 of trap/ granite/ quartzite/ gneiss metal for foundation and bedding including bailing out water, Steel centering, formwork, laying/pumping, compacting, roughening them if special finish is to be provided, finishing if required and curing complete, with fully automatic micro processor based PLC with SCADA enabled reversible Drum Type mixer/concrete Batch mix plant (Pan mixer) etc. complete. With fine aggregate (Natural Sand / Crushed sand VSI Grade finely washed etc)							
Spec.No. :Bd. E. 1 Page No. 287							
S.S.R. Item No.24.01/Page No.217			(1.05/3) x {(0.20+0.36+$\sqrt{.20 \times 0.36}$)}				
For Boundary Pillar	Cum	1.00		0.289		0.289	
Volume of Pillar = H/3 (A1+A2+ $\sqrt{A1A2}$) A1=0.45 x 0.45 = 0.20 Sqmt, A2=0.60 x 0.60 =0.36 Sqmt , H = 1.05 mt							
For Pedastal at top	Cum	1.00	0.23	0.23	0.23	0.012	
					Net Qty.	0.301	
			@ Rs.	4521.10	/Cum	Rs.	1361.00

Name Of Work :- Construction of Concrete Boundary Pillar In Comp. No. at in
Beat In Round in Range In Division In Circle.

Mesurement & Abstract.

ITEM OF WORK	Unit	NO	L	B	D/H	QTY.	AMOUNT
ITEM NO.4							
Providing **Internal cement plaster 6mm. thick in a single coat in cement mortar 1:4 without Neeru finish** to concrete surface in all positions, including scaff ing and curing etc. complete.							
Spec. No. Bd.L.1 Page No. 367							
S.S.R. Item No.32.012 /Page No.260							
For Boundary Pillar							
4 x ((0.60+0.45)/2) x 1.05 = 3.38	Sqmt	4.00	0.53	1.05		2.21	
For Top area 0.45 x 0.45 = 0.20	Sqmt	1.00	0.45	0.45		0.20	
					Net Qty.	2.41	
			@ Rs.	150.95	/Sqmt	Rs.	363.00
ITEM NO.5							
Providing and applying priming coat on concrete/ masonary/ Asbestos Cement plastered surfaces including scaffolding if necessary, preparing the surface by thoroughly cleaning oil, grease, dirt and other foreign matter and sand							
Spec.No.: As directed by Engineer Incharge.							
S.S.R. Item No.35.21/Page No.282							
For Boundary Pillar							
4 x ((0.60+0.45)/2) x 1.05 = 3.38	Sqmt	4.00	0.53	1.05		2.21	
For Top area 0.45 x 0.45 = 0.20	Sqmt	1.00	0.45	0.45		0.20	
					Net Qty.	2.41	
			@ Rs.	28.00	/Sqmt	Rs.	67.00
ITEM NO.6							
Provlding and applying two coats of flat oil paint of approved colour and shade to internal / external plastered surfaces including scaffolding if necessary, cleaning and preparing the surface (excluding primer coat) etc. complete.							
Spec.No.: Bd.O.7 Page No. 406							
S.S.R. Item No.35.12/Page No.281							
White Oil paint is to be used for painting of top Stone							
For Sides	Sqmt	1.00	0.92	0.30		0.28	
For Top	Sqmt	1.00	0.23	0.23		0.05	
					Net Qty.	0.33	
			@ Rs.	76.00	Sqm	Rs.	25.00
ITEM NO.7							
Painting letters upto 20 cm height com.ete brushes, coir.brushers, dusting, cleaning, including cost of paint etc. complete.							
Spec.No.: MORTH 801							
S.S.R. Item No.6.05/Page No.58							
For Pillar four Side	Nos	4.00	8.00			32.00	
					Net Qty.	32.00	
			@ Rs.	19.00	/Nos	Rs.	608.00

Name Of Work :- Construction of Concrete Boundary Pillar In Comp. No. at In
Beat In Round In Range In Division In Circle.

Mesurement & Abstract.

ITEM OF WORK	Unit	NO	L	B	D/H	QTY.	AMOUNT
ITEM NO.8							
Providing and applying two coats of ex[illegible]r weather shield paint of approved manufac[illegible]e and of approved colour to the plastered surfaces including cleaning ,preparing the plaster surface ,applying primer coat ,scaffolding if neces[illegible], and watering the surface for two days etc complete. NOTE: For Item No. 15 to 18 [illegible]r approval of Superintending Engineer wi[illegible]e necessary							
As directed by Engineer incharge.							
S.S.R. Item No.35.26/Page No.283							
Quantity as per Item No. 5	Sqm					2.41	
					Net Qty.	2.41	
			@ Rs.	194.00	/Sqm	Rs.	467.00
			Total Rs = (A)				2924.00
			Add Amount For Royalty @ 141.34 = B				23.00
			Sub Total (A+B) = C				2947.00
			Add 12% GST On (C) = D				354.00
			Add 4% Contigensis On (C) = E				118.00
			Add 1% for Labour Insurance On (C) = E				29.00
			Total Amount Rs (C+ D+E = F				3419.00
						Say Rs.	3400.00

Junior Engineer
Office of the Forest Engineer
M. S. Nagpur.

Range Forest Officer(T)

ACF

Annexure – I

BOUNDARY PILLAR (CLASS - II)

(OPTION - I)

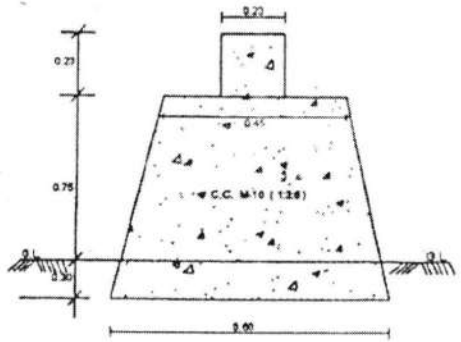

SECTIONAL ELEVATION
" A - A "

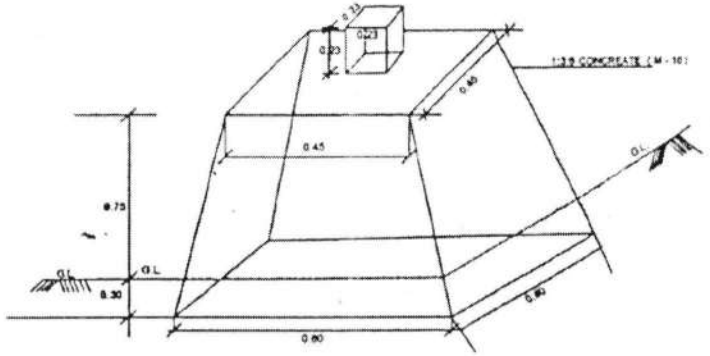

ISOMETRIC ELEVATION

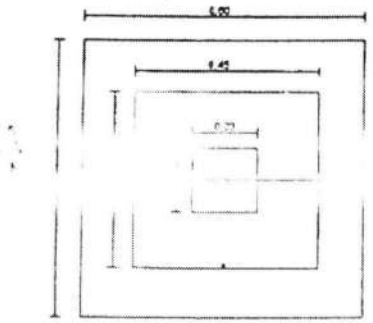

PLAN

A1 (TOP AREA)	= 0.45X 0.45 = 0.20 SQM
A2 (BOTTOM AREA)	= 0.60 X 0.60 = 0.36 SQM
H (TOTAL HEIGHT)	= 1.05M
H1(BELOW GL)	=0.30M
H2 (ABOVE GL)	=0.75M
VOLUME	= H/3 x (A1+A2+$\sqrt{A1A2}$)
	= 0.289 CUM

Office of the Forest Engineer
Nagpur.

Forest Engineer
W. C. Nagpur.

VOLUME FOR PEDESTAL = 0.23 X 0.23 X 0.23 mt = 0.012 CUM

TOTAL VOLUME FOR CONCRETE PILLAR = 0.289 + 0.012 = 0.301 CUM

ESTT. COST. = Rs. 3419.00 **Say Rs. 3400.00**

WT. OF PILLAR = 674.00 Kg.

(17)

ANNEXURE-II

Information on central post

Survey no.
Compartment no.
Serial no.
} Only numbers in fluorescent colors

Reserve Forests	-	Green background Yellow letters.
Protected Forests	-	Green background Yellow letters.
Unclassed/Private Forests & Zudpi Jungle	-	Green background Yellow letters.
Height of letters	-	5 cm
Thickness	-	1 cm

INFORMATION ON PILLAR

Colour of pillar	-	Florescent white		
Strip of 20 cm from top	-	For Reserved Forest	-	Green
	-	For Protected Forest	-	Green
	-	For Other type Forest	-	Green
Boundary type	-	Beat Boundary - B		in the middle of 20 cm strip in white letter for RF, PF and other types of forest land
	-	Round Boundary - R		
	-	Range Boundary - RR		
	-	Division Boundary - D		
	-	State Boundary - S		
Compartment no.	-	Height 10 cm		
	-	Thickness of letter 2 cm		
Survey no.	-	Height 10 cm		
	-	Thickness of letter 2 cm		
Longitude	-	Height 5 cm		
Latitude	-	Thickness 1 cm		
Year of Construction	-	Height 10 cm		
	-	Thickness 2 cm		

(61)

INFORMATION ON PILLAR

Colour of pillar	-	Florescent white		
Strip of 20 cm from top	-	For Reserved Forest	-	Green
	-	For Protected Forest	-	Green
	-	For Other type Forest	-	Green
Boundary type	-	Beat Boundary - B		in the middle of 20 cm strip in white letter for RF & PF & Other type of forest ~~in green letter for PF~~
	-	Round Boundary - R		
	-	Range Boundary - RR		
	-	Division Boundary - D		
	-	State Boundary - S		
Compartment no.	-	Height 10 cm		
	-	Thickness of letter 2 cm		
Survey no.	-	Height 10 cm		
	-	Thickness of letter 2 cm		
Longitude	-	Height 5 cm		
Latitude	-	Thickness 1 cm		
Year of Construction	-	Height 10 cm		
	-	Thickness 2 cm		

BOUNDARY PILLAR'S

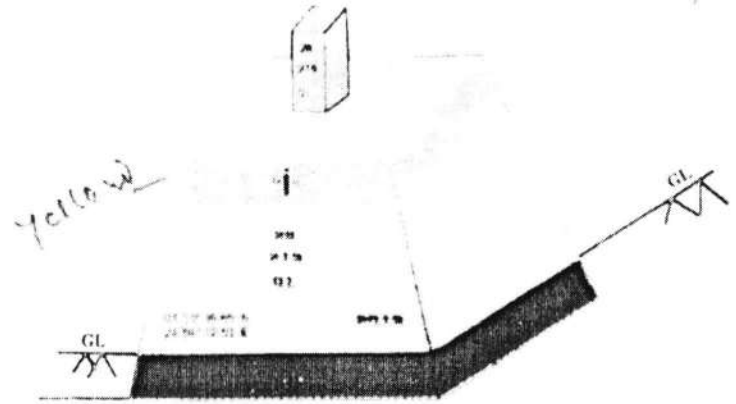

MODEL PILLAR OF PROTECTED FOREST

BOUNDARY PILLAR'S

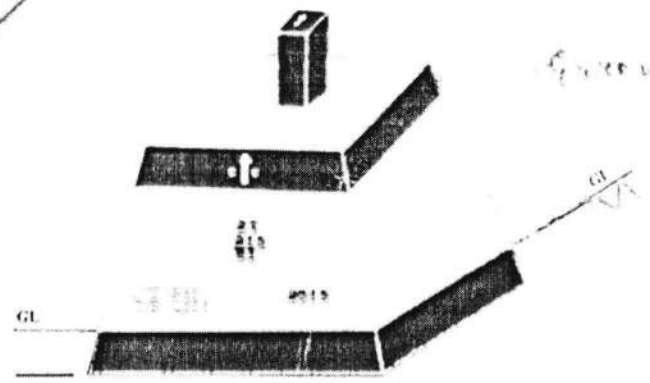

MODEL PILLAR OF RESERVE FOREST

BOUNDARY PILLAR'S

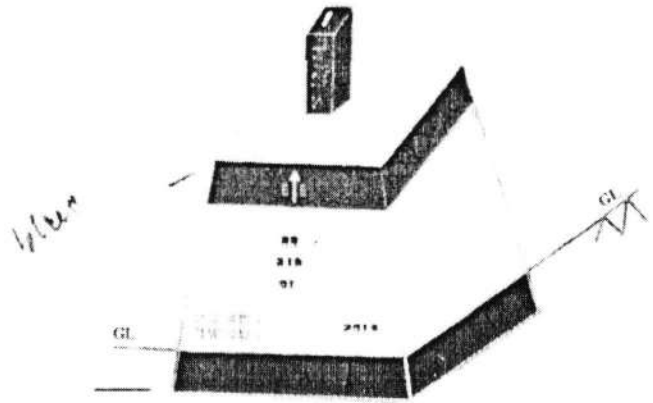

MODEL PILLAR OF OTHER FOREST

BOUNDARY PILLAR'S

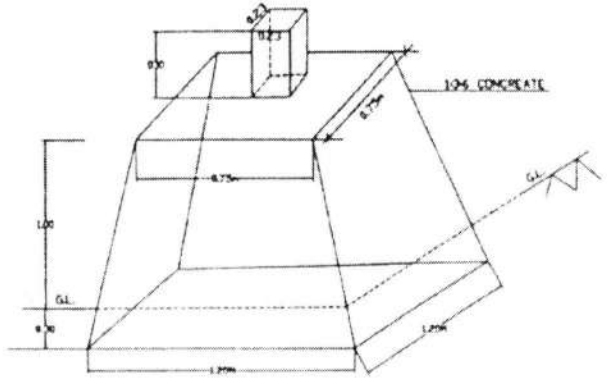

MODEL PILLAR OF FOREST

CHAPTER X

POWERS AND DUTIES OF FOREST OFFICER AND REVENUE OFFICER.

[Section 76 (a)]

70. *Principal Chief Conservator of Forests (Head of Forest Force), his powers and duties.*— (*1*) The Principal Chief Conservator of Forests (Head of Forest Force) shall be the head of the Forest Department and the technical advisor to the State Government in all matters relating to forest and Wild Life.

(*2*) He is empowered to deal on his own authority with technical questions such as the operation of sanctioned working plans, fire protection and silvicultural operations generally, and with matters regarding which powers have been specifically delegated to him.

(*3*) In regard to all technical and professional matters he will be the controlling authority over the Principal Chief Conservators of Forests, Additional Principal Chief Conservators of Forests, and Chief Conservators of Forests and he shall be an advisor on policy matters for the State Government and provider of guidance on forestry matters to the Divisional Commissioners, as the case may be.

71. *Powers of Chief Conservator of Forests.*— Subject to various provisions of these rules and subject to the instructions issued by the Principal Chief Conservator of Forests (Head of Forest Force) from time to time, each Chief Conservator of Forests in his own Circle shall be responsible for directing all technical forestry operations.

72. *Chief Conservators of Forests to control Forests-officers.*— Except in so far as is otherwise contained in the orders of the State Government, the departmental control over all Forests-officers in a Circle vests in the Chief Conservators of Forests of that Circle subject to the control of the Principal Chief Conservator of Forests (Head of Forest Force).

73. *Procedure regarding departmental communications.*— In matters relating to departmental finance or to appointment, transfer or leave of establishment, and those mentioned in rule 70, as matters to be dealt with by the Principal Chief Conservator of Forests (Head of Forest Force) on his own authority, the Chief Conservators of Forests shall address all communications to the Principal Chief Conservator of Forests (Head of Forest Force).

74. *Deputy Conservator of Forests.*— All Assistant Conservators of Forests and subordinate personnel shall, in all administrative and technical matters, work under the Deputy Conservator of Forests subject to the general power of control vested in the Chief Conservator of Forests and the Principal Chief Conservator of Forests (Head of Forest Force).

75. *Powers of Collector and Deputy Conservator of Forests regarding local supply, public rights, pastures, etc.*— *(1)* In all matter relating to supply of forest-produce including grass for the domestic and agricultural requirements of the villagers, grazing and the rights and privileges of the people in or in respect of forests, orders shall be issued by the Deputy Conservator of Forests in consultation with the Collector concerned.

(2) The management and control of the pastures and fodder reserves handed over to the Revenue Department vests exclusively in the Collector subject to the orders of the Divisional Commissioner and of the State Government. In this respect, the Chief Conservator of Forests and the Deputy Conservator of Forests are to act in the capacity of consultative officers advising and giving their opinions on all questions of a technical character that may be referred to them by any of the said authorities.

76. *Forest compartment not to be closed except under the orders of the Collector.*— No forest compartment shall be closed for planting or reboisement or for punitive purposes, except under the order or with the approval of the Collector concerned.

This rule shall not apply to the closure in accordance with the provisions of a Working Plan in respect of such compartments where no rights exist.

६७. **लाकडे गोळा करणाऱ्या व्यक्तीस मोबदला देणे.**—लाकडे गोळा करणारी प्रत्येक व्यक्ती, मग ती वन अधिकारी असो वा नसो, त्यान लाकडे गोळा करण्यासाठी केलेला खर्च आणि प्रयत्न, याकरिता खालीलप्रमाणे मोबदला मिळण्यास पात्र राहील :—

(१) जर सदर लाकूड शासनाची मालमत्ता असल्याचे स्पष्ट झाल्यास, विक्रीतून प्राप्त किमतीमधून विक्री व साठवणूक करण्याकरिता झालेला खर्च वजा करून उर्वरित रकमेच्या ५० टक्के पेक्षा जास्त नसेल एवढी रक्कम; आणि

(२) जर सदर लाकूड शासनाव्यतिरिक्त इतर व्यक्तींची मालमत्ता असल्याचे स्पष्ट झाल्यास त्या लाकडाच्या अंदाजित मूल्याच्या ५० टक्के पेक्षा जास्त नसेल एवढी रक्कम.

मोबदल्याची रक्कम आणि अंदाजित मूल्य पुढील व्यक्तीकडून ठरविली व अदा केली जाईल :—

(अ) जिथे अशी रक्कम रुपये पन्नास हजारांपेक्षा जास्त होत नाही, त्या प्रकरणी राज्य शासनाने प्राधिकृत केलेल्या उप वनसंरक्षक दर्जापेक्षा कमी नसलेला अधिकारी, आणि

(ब) इतर प्रकरणात प्रधान मुख्य वनसंरक्षक (वन बल प्रमुख), महाराष्ट्र राज्य.

६८. **ज्यावेळी गोळा केलेली लाकडे खाजगी व्यक्तीच्या मालकीची असतील, त्याने सर्व खर्च देणे.**—गोळा केलेली लाकडे राज्य शासन सोडून इतर व्यक्तीची मालमत्ता असल्याचे सिद्ध झाल्यास, अशी व्यक्ती शासनास कलम ५० अनुसार केलेला खर्च खालीलप्रमाणे देण्यास उत्तरदायी असेल, म्हणजेच :—

(१) अशी लाकडे गोळा करण्याचा आणि शोध घेणाऱ्या व्यक्तीला अदा करण्यात आलेल्या प्रत्यक्ष मोबदलाइतकी रक्कम,

(२) प्रवाहात गोळा केलेली लाकडे गोळा करून त्याची वाहतूक त्याकरिता असलेल्या आगारापर्यंत करण्यासाठी होणारा प्रत्यक्ष खर्च,

(३) अशा लाकडांचा आगारातील साठवणूक शुल्क जे मुख्य वनसंरक्षक, वेळोवेळी प्रधान मुख्य वनसंरक्षक (वन बल प्रमुख), महाराष्ट्र राज्य यांच्या पूर्व मंजुरीनंतर निश्चित करतील.

६९. **प्राधिकृत वन अधिकाऱ्याशिवाय इतर कोणतीही व्यक्ती लाकडे चिन्हांकित करणार नाही.**—मुख्य वनसंरक्षक यांनी याकरिता प्राधिकृत केलेल्या वनअधिकाऱ्या व्यतिरिक्त इतर कोणतीही व्यक्ती, या प्रकरणातील नियम लागू असलेल्या लाकडांना चिन्हांकित करणार नाही.

प्रकरण - X

वनअधिकारी आणि महसूल अधिकारी यांच्या शक्ती आणि कर्तव्ये

[कलम ७६ (अे)]

७०. **प्रधान मुख्य वनसंरक्षक (वनबल प्रमुख) यांची शक्ती आणि कर्तव्ये.**—(१) प्रधान मुख्य वनसंरक्षक (वनबल प्रमुख), महाराष्ट्र राज्य हे वन विभागाचे प्रमुख असतील आणि ते राज्य शासनास, वने आणि वन्यजीव यांचेबाबत तांत्रिक सल्लागार असतील.

(२) त्यांना स्वतःचे अधिकारात तांत्रिक बाबी उदा. मंजूर कार्य आयोजनाची अंमलबजावणी, वनांचे आगीपासून संरक्षण आणि वनसंवर्धनाची कामे आणि त्यांना विशेषत: शक्ती प्रदान केली आहे, अशा बाबींवर कार्य करता येईल.

(३) तांत्रिक आणि व्यवसायिक बाबींबाबत, ते नियंत्रक अधिकारी म्हणून इतर प्रधान मुख्य वनसंरक्षक, अपर प्रधान मुख्य वनसंरक्षक आणि मुख्य वनसंरक्षक यांचेवर नियंत्रण ठेवतील. धोरणात्मक बाबींकरिता ते शासनाचे सल्लागार असतील आणि वनविषयक बाबींवर विभागीय आयुक्त यांना मार्गदर्शन करतील.

७१. **मुख्य वनसंरक्षक यांच्या शक्ती.**—या नियमातील तरतुदींच्या अधीन राहून आणि प्रधान मुख्य वनसंरक्षक (वनबल प्रमुख) यांनी वेळोवेळी दिलेल्या सूचनांच्या अधीन राहून, प्रत्येक मुख्य वनसंरक्षक त्याचे वृत्तान्त वनविषयक तांत्रिक कामे निर्देशित करण्याकरिता जबाबदार असेल.

७२. **मुख्य वनसंरक्षक यांचे वन अधिकारी यांच्यावर नियंत्रण.**—राज्य शासनाने दिलेल्या आदेशाव्यतिरिक्त, मुख्य वनसंरक्षक त्याचे वृत्तान्तील सर्व वन अधिकारी यांचेवर, प्रधान मुख्य वनसंरक्षक (वनबल प्रमुख) यांच्या अधिपत्याखाली नियंत्रण ठेवतील.

७३. **विभागीय पत्रव्यवहार करण्याच्या पद्धतीबाबत.**—विभागाचा अर्थव्यवहार किंवा आस्थापनाविषयक बाबी, नेमणुका, बदल्या, रजा प्रकरणे आणि नियम ७० मध्ये नमूद केलेली प्रकरणे यांचेबाबत जे विषय प्रधान मुख्य वनसंरक्षक (वनबल प्रमुख) स्वतःचे अधिकारात हाताळतात, अशा प्रकरणात मुख्य वनसंरक्षक सर्व पत्रव्यवहार प्रधान मुख्य वनसंरक्षक (वनबल प्रमुख) यांना उद्देशून करतील.

७४. **उप वनसंरक्षक.**—प्रधान मुख्य वनसंरक्षक (वनबल प्रमुख) आणि मुख्य वनसंरक्षक यांच्या सर्व साधारण शक्ती आणि नियंत्रण यांचे अधीन राहून, सर्व प्रशासकीय व तांत्रिक बाबींसंदर्भात वन विभागातील सर्व सहायक वनसंरक्षक आणि कनिष्ठ कर्मचारी, उप वनसंरक्षक यांच्या नियंत्रणाखाली कार्य करतील.

विवरण पत्र -१

शासन निर्णय क्र. मापदंड-२०१३/प्र.क्र.११४/जल-७, दिनांक १० ऑक्टोबर, २०१३ चे सहपत्र

मृद व जलसंधारणाच्या विविध उपचारांची कामे मजुरामार्फत करण्यासाठी सुधारित तांत्रिक/ आर्थिक मापदंडाचा तक्ता.

अ. क्र.	उपचाराचे नांव	तांत्रिक मापदंड							सपाटीकरण /खोदकाम परिमाण घ.मी.	परिमाण	आर्थिक मापदंड (रु.) (रु.१६२ प्रति दिन प्रमाणे)	
		उतार गट/ जमिनीचा प्रकार	पाया रुंदी मी.	बांधाची उंची मी.	माथा रुंदी मी.	बाजू उतार	बांधाचा छेद चौ.मी.	बांधाची लांबी मी.			ज.जा.उ.यो /ढों.भाग	इतर
१	ढाळीचे बांध बंदिस्ती	भारी	२.५०	०.८०	०.५०	१.२५:१	१.२०	९५	-	हेक्टर	१२८६५	११२०९
		मध्यम	२.३०	०.७५	०.५०	१.२०:१	१.०५	१६५	-	--"--	१७७३४	१५४५४
		हलकी	२.००	०.७५	०.५०	१:१	०.९५	२१०	-	--"--	१९९३७	१७३८०
२	(अ)भात खाचरे बांध बंदिस्ती (मजगी)	३ % पर्यंत	१.८०	०.६८	०.४५	१:१	०.७५	६५०	७५०	हेक्टर	१११९६६	९७४०४
	(कोकण व पश्चिम महाराष्ट्राकरिता)	३ ते ६ %	१.८०	०.६८	०.४५	१:१	०.७५	७२०	१३१२	--"--	१६८७०९	१४६७४४
	(०.७५ चौ.मी. छेदाचे बांध)	६ ते ८ %	१.८०	०.६८	०.४५	१:१	०.७५	८१७	१५००	--"--	१९२२२४	१६७१९९
	(ब)०.५४ चौ.मी. छेदाचे बांध असलेले भात											
	खाचरे बांध बंदिस्ती (मजगी) (पश्चिम	३ % पर्यंत	१.५०	०.६०	०.३०	१:१	०.५४	६५०	७५०	हेक्टर	१००९३८	८७८१३
	महाराष्ट्र, कोकण व विदर्भ (हलकी जमीन)	३ ते ६ %	१.५०	०.६०	०.३०	१:१	०.५४	७२०	१३१२	--"--	१५६४९३	१३६१२१
		६ ते ८ %	१.५०	०.६०	०.३०	१:१	०.५४	८१७	१५००	--"--	१७८३६२	१५५१४५
३	भात खाचरे बांध बंदिस्ती (पंडी बंडिंग)		२.२०	०.६०	०.४०	१.५:१	०.७८	७७८	५६२.५	हेक्टर	१००७७१	८७११७
	(विदर्भाकरिता)											
४	जुनी भातशेती बांध दुरुस्ती	बांधाचा अतिरिक्त छेद- ०.४५ चौ.मी.							-	हेक्टर	३६९४३	३२१२५
	(कोकण,पश्चिम महाराष्ट्र व विदर्भाकरिता)											
५	भात खाचरे बांध बंदिस्ती (पडकई कार्यक्रमातंगत दगडी बांधासह मजगी) (कोकण,पश्चिम महाराष्ट्र व विदर्भाकरिता)											
	(अ) ८ ते १२ टक्के उतार -	८ ते १२ %	०.८७	०.९०	०.६०	०.३:१	०.६६	८१६	-	हेक्टर	२५३५४६	-
	(ब) १२ ते १६ टक्के उतार	१२ ते १६ %	०.८७	०.९०	०.६०	०.३:१	०.६६	११२६	-	--"--	३०२३२६	-
	(क) १६ ते २० टक्के उतार	१६ ते २० %	०.८७	०.९०	०.६०	०.३:१	०.६६	१४११	-	--"--	३४९५०९	-
६	शेत बांध बंदिस्ती (कंपार्टमेंटचे बंडींग)											
	० ते ४ उतार व हलकी जमिन	हलकी	१.८०	०.७५	०.३०	१:१	०.८०	२००	-	हेक्टर	१४५३१	१२८४५
	० ते ४ उतार व मध्यम जमिन	मध्यम	२.००	०.८५	०.३०	१:१	१.००	२००	-	--"--	१७७६२	१५६५५
	० ते ४ उतार व भारी जमिन	भारी	२.२५	०.९०	०.४५	१:१	१.२०	२००	-	--"--	२०९९४	१८४६५
७	चिबड जमिन सुधारणा (उघडे चर)		०.६०	१.२०	३.६०	१.२५:१	२.५२	६५	-	हेक्टर	३७५४९	३२६८८
८	गॅबियन बंधारा		२.४५	१.००	०.४५	१:१	१.४५		-	घ.मी.	१००१	९५२
९	शेततळे	शेततळ्याचा आकार १५x१५x३मी. ते ३०x३०x३ मी., बाजू उतार १:१ ते १.५:१, बर्म २ मी								ह.घ.मी.	१५४८९१	१३४७०८
१०	मउ खडकामध्ये शेततळे	२ मी. खोलीपर्यंत सर्वसाधारण मूस्तर व १ मी. मऊ खडकामध्ये खोदकाम								अ.क्र.९ वरील शेततळ्याच्या मापदंडापेक्षा २५ टक्के अधिकं मापदंड लागू राहतील.		
११	खोदतळे	खोदतळ्याचा आकार ३०x२०x३ मी. बाजु उतार- दोन्ही काठाच्या बाजूने १:१ प्रवाहाच्या दिशेने वरील बाजूस ३:१ खालील बाजूस ६:१								अ.क्र.९ वरील शेततळ्याच्या मापदंडाएवढा मापदंड लागू राहतील.		
१२	अर्दन स्ट्रक्चर (मातीचा बांध)		२.७६	०.७२	०.६०	१.५:१	१.२०		-	घ.मी.	१७६	१५४

Annexure-XLL (6)

शासन निर्णय क्र. मापदंड-२०१३/प्र.क्र.११४/जल-७, दिनांक १० ऑक्टोबर, २०१३ चे सहपत्र

अ. क्र.	उपचाराचे नांव	तांत्रिक मापदंड							सपाटीकरण /खोदकाम परिमाण घ.मी.	परिमाण	आर्थिक मापदंड (रु.) (रु.१६२ प्रति दिन प्रमाणे)	
		उतार गट/ जमिनीचा प्रकार	पाया रुंदी मी.	बांधाची उंची मी.	माथा रुंदी मी.	बाजू उतार	बांधाचा छेद चौ.मी.	बांधाची लांबी मी.			ज.जा.उ.यो /डों.भाग	इतर
१३	अनघड दगडाचे बांध (अ) ० ते ५ टक्के उताराच्या ओघळीवरील बांधास दोन्ही बाजूस १:१ बाजू उतार											
	पाणलोट क्षेत्राचा वरचा भाग (अपर रिचेस)		२.००	०.७५	०.५०	१:१	०.९४		-	घ.मी.	२६३	२२९
	पाणलोट क्षेत्राचा मधलाभाग (मिडल रिचेस)		२.५०	१.००	०.५०	१:१	१.५०		-	--"--	२६३	२२९
	(ब) ५ ते १५ टक्के उताराच्या ओघळीवरील बांधास पुढील बाजूस १:१ व मागील बाजूस २:१ बाजू उतार											
	पाणलोट क्षेत्राचा वरचा भाग (अपर रिचेस)		२.७५	०.७५	०.५०	१:१	१.२२		-	घ.मी.	२६३	२२९
	पाणलोट क्षेत्राचा मधलाभाग (मिडल रिचेस)		३.५०	१.००	०.५०	१:१	२.००		-	--"--	२६३	२२९
१४	नाला बांध	मुख्य बांध - १) बाजू उतार- १.५:१ ते २:१ २) माथा रुंदी - १ ते १.५० मी.										
	अ) मातीचे नाला बांध	३)सांडव्यावरून वाहणाऱ्या पाण्याची उंची = ०.४० ते १ मी.				४) फ्रि बोर्ड - १.०० मी				ह.घ.मी.		
	१ टक्के नाला तळ उतारा पर्यंत	५) अभेद्य भित -१) बाजू उतार- १:१ २) माथा रुंदी - ०.६० मी.								पाणी साठा	७१२९८	६२०१२
	२ टक्के नाला तळ उतारा पर्यंत	६)सी.ओ.टी.(नाला तळामध्ये) १) बाजू उतार- ०.५:१ २) तळ रुंदी - १ ते २ मी.								--"--	१२६१६८	१०९७३५
	३ टक्के नाला तळ उतारा पर्यंत	७)सी.ओ.टी.(नाला तळाव्यतिरिक्त) १) माथा रूंदी १ मी,२) तळ रुंदी १ मी,३)खोली १ मी								--"--	१६५१९७	१४३६८४
	ब) भिनार पध्दतीचे माती नालाबांध									अ.क्र.१४ अ) येथील माती नाला बांधाचे मंजूर आर्थिक मापदंड लागू राहतील.		
१४	क) सिमेंट नाला बांध (अनघड दगडाचे)									ह.घ.मी.		
	१ टक्के नाला तळ उतारा पर्यंत	१) बांधाचा बाजू उतार- १:०.३३ ते १:०.७७ २) माथा रुंदी - ०.७५ ते १.४० मी.								पाणी साठा	८१४४७	७९५२३
	२ टक्के नाला तळ उतारा पर्यंत	३) पाणी साठा उंची - १.५० ते ५.०० मी. ४) फ्रि बोर्ड - ०.३० ते ०.६० मी								--"--	९३६६४	९१४५२
	३ टक्के नाला तळ उतारा पर्यंत	५) सांडव्यावरून वाहणाऱ्या पाण्याची उंची - ०.२५ ते २.०० मी								--"--	१०५८८१	१०३३८०
१५	वळण बंधारा	१) बांधाची उंची १.१० मी. २)पाया रुंदी १.६५मी. ३) बाजू उतार १:०.५० ४) माथा रूंदी ०.६०मी.								प्र.हे.सि.क्षेत्र	१२४८०	१२२०५
१६	डोंगर उतारावर समपातळीत दगडी बांध											
	घालणे											
	१० टक्के पर्यंत	१० % पर्यंत	०.७५ मी	०.६० मी	०.४५ मी	०.२५:१	०.३६	७४०	-	घ.मी.	१७५	१५५
	११ ते १४ टक्के	११ ते १४ %	०.७५ मी	०.६० मी	०.४५ मी	०.२५:१	०.३६	८००		--"--	१७५	१५५
	१४ टक्के पेक्षा जास्त	१४ % पेक्षा जास्त	०.७५ मी	०.६० मी	०.४५ मी	०.२५:१	०.३६	८७०	-	--"--	१७५	१५५
१७	अ) सलग समपातळी चर (०.३० मी. खोलीचे चर)											
	मॉडेल क्र. १	० ते ४ %	०.६०	०.३०	०.६०	-	०.१८	८३३		हेक्टर	३११४२	२९०८७
	मॉडेल क्र. २	४ ते ८ %	०.६०	०.३०	०.६०	-	०.१८	९८७	-	--"--	३५९९५	३३५६२
	मॉडेल क्र. ३	८ ते १५ %	०.६०	०.३०	०.६०	-	०.१८	९२५	-	--"--	३९८४७	३७५६६
	मॉडेल क्र. ४	१५ ते ३३ %	०.६०	०.३०	०.६०	-	०.१८	१३८९	-	--"--	५६६३३	५३२०८
	मॉडेल क्र. ५	० ते ४ %	०.६०	०.३०	०.६०	-	०.१८	१०००	-	--"--	२४२२५	२१७१४
	मॉडेल क्र. ६	४ ते ८ %	०.६०	०.३०	०.६०	-	०.१८	११७९	-	--"--	२८०४७	२५०८८
	मॉडेल क्र. ७	८ ते १५ %	०.६०	०.३०	०.६०	-	०.१८	१५१४	-	--"--	३५११२	३१३१०
	मॉडेल क्र. ८	१५ ते ३३ %	०.६०	०.३०	०.६०	-	०.१८	२१७४	-	--"--	४९१२९	४३६७०

अ. क्र.	उपचाराचे नांव	तांत्रिक मापदंड							सपाटीकरण /खोदकाम परिमाण घ.मी.	परिमाण	आर्थिक मापदंड (रु.) (रु.१६२ प्रति दिन प्रमाणे)	
		उतार गट/ जमिनीचा प्रकार	पाया रुंदी मी.	बांधाची उंची मी.	माथा रुंदी मी.	बाजू उतार	बांधाचा छेद चौ.मी.	बांधाची लांबी मी.			ज.जा.उ.यो /डों.भाग	इतर
	ब) सलग समपातळी चर (०.४५ मी. खोलीचे चर)											
	मॉडेल क्र. १	० ते ४ %	०.६०	०.४५	०.६०	-	०.२७	८३३	-	हेक्टर	४१५६८	३८४८७
	मॉडेल क्र. २	४ ते ८ %	०.६०	०.४५	०.६०	-	०.२७	९८७	-	--"--	४६६६९	४३२४८
	मॉडेल क्र. ३	८ ते १५ %	०.६०	०.४५	०.६०	-	०.२७	९२५	-	--"--	५५१३८	५१४८८
	मॉडेल क्र. ४	१५ ते ३३ %	०.६०	०.४५	०.६०	-	०.२७	१३८९	-	--"--	७६९३०	७१७९३
	मॉडेल क्र. ५	० ते ४ %	०.६०	०.४५	०.६०	-	०.२७	१०००	-	--"--	३३७४२	२९९७६
	मॉडेल क्र. ६	४ ते ८ %	०.६०	०.४५	०.६०	-	०.२७	११७९	-	--"--	३९२६९	३४८२९
	मॉडेल क्र. ७	८ ते १५ %	०.६०	०.४५	०.६०	-	०.२७	१५१४	-	--"--	४९५२२	४३८१९
	मॉडेल क्र. ८	१५ ते ३३ %	०.६०	०.४५	०.६०	-	०.२७	२१७४	-	--"--	६९८२२	६१६३२
	क) गुरे प्रतिबंधक चर	-	०.६०	१.००	१.९०	-	१.२५	१०२	-	र. मी.	१५०	१३०
	(स.स.चराचा १० हेक्टर पेक्षा अधिक सलग गट असल्यास)											
१८	जुन्या बोडीचे नुतनीकरण/दुरुस्ती											
	मुख्य बांधाची लांबी ५०मी. व उंची- १.५० मी.	-	५.५०	१.५०	१.००	१:१.५	४.८८		-	प्रति बोडी	३६६२९	३२०६४
	मुख्य बांधाची लांबी ५०मी. व उंची- २.०० मी.	-	७.००	२.००	१.००	१:१.५	८.००		-	प्रति बोडी	७२५०८	६३३२३
	मुख्य बांधाची लांबी ७०मी. व उंची- १.५० मी.	-	५.५०	१.५०	१.००	१:१.५	६.८८		-	प्रति बोडी	४३३८२	३७९४८
	मुख्य बांधाची लांबी ७०मी. व उंची- २.०० मी.	-	७.००	२.००	१.००	१:१.५	८.००		-	प्रति बोडी	८८४३२	७७१८०
	मुख्य बांधाची लांबी १००मी. व उंची- १.५० मी.	-	५.५०	१.५०	१.००	१:१.५	८.८८		-	प्रति बोडी	६८९४८	६०२०७
	मुख्य बांधाची लांबी १००मी. व उंची- २.०० मी.	-	७.००	२.००	१.००	१:१.५	८.००		-	प्रति बोडी	१२७९९२	१११६३३
१९	वनराई बंधारा	-	२.१०	१.२०	१.५०	-	२.१२		-	प्रति र. मी.	७५९	७२७
									-	प्रति घ.मी.	३५९	३४४
२०	विहिर पुनर्भरण - अ) भारी जमीन पक्की विहिर	१) साठवण खड्डा - ३ मी. x ३ मी. x २ मी. २) शोष खड्डा - २ मी. x २ मी. x २ मी.								प्रति विहिर	१२०६३	११३९७
	ब) हलकी जमीन पक्की विहिर	३) साठवण खड्डयाकरीता इनलेट - लांबी २०मी, माथा १.२० मी, पाया ०.६० मी, खोली ०.६० मी.								प्रति विहिर	१२५२४	११७९७
	क) भारी जमीन कच्ची विहिर	४) साठवण खड्डा ते शोष खड्डा नाली - लांबी २ मी, माथा ०.९० मी, पाया ०.६० मी, खोली ०.३० मी.								प्रति विहिर	१३५९४	१२८४६
	ड) हलकी जमीन कच्ची विहिर	५) शोष खड्डयाकरीता आऊटलेट - लांबी १५मी, माथा ०.९० मी, पाया ०.६० मी, खोली ०.३० मी.								प्रति विहिर	१४०५५	१३२४६

Annexure-C

Status of Polygon & Photos Uploaded on e-Green Watch Portal as on 30/04/2022

Maharashtra State							
Plantation Year	**No. of Afforestation Site as per APO**	**Uploading Status**					
		Polygon	**Before Plantation Photos**	**After Plantation Photos**	**% of Polygon**	**% Before Plantation Photos**	**% of After Plantation Photos**
2017- Rain	**131**	128	93	106	97.71	70.99	80.92
2018- Rain	**138**	138	97	97	100.00	70.29	70.29
2019- Rain	**643**	643	643	640	100.00	100.00	99.53
2020- Rain	**47**	47	47	47	100.00	100.00	100.00
2021- Rain	**351**	351	323	281	100.00	92.02	80.06
Total	**1310**	**1307**	**1203**	**1171**	**99.77**	**91.83**	**89.39**